HOW TO USE THIS MANUAL

Follow the Maintenance Schedule (Section 3) recommendations to ensure that the vehicle is in peak operating condition and the emission levels are within the standard set by U.S. Environmental Protection Agency and California Air Resources Board. Performing the first scheduled maintenance is very important. It compensates for the initial wear that occurs during the break-in period.

Sections 1 through 3 apply to the whole motorcycle, while sections 4 through 20 describe parts of the motorcycle, grouped according to location.
Find the section you want on this page, then turn to the table of contents on page 1 of that section.
Most sections start with an assembly or system illustration, service information and troubleshooting for the section. The subsequent pages give detailed procedures.
If you don't know the source of the trouble, go to section 21 TROUBLESHOOTING.

CONTENTS

	GENERAL INFORMATION	1
	LUBRICATION	2
	MAINTENANCE	3
ENGINE	FUEL SYSTEM	4
ENGINE	COOLING SYSTEM	5
ENGINE	ENGINE REMOVAL/INSTALLATION	6
ENGINE	CLUTCH/GEARSHIFT LINKAGE	7
ENGINE	ALTERNATOR/STARTER CLUTCH	8
ENGINE	CYLINDER HEAD/VALVE	9
ENGINE	CYLINDER/PISTON	10
ENGINE	CRANKSHAFT/TRANSMISSION	11
CHASSIS	COWLING/MUFFLER/REAR FENDER	12
CHASSIS	FRONT WHEEL/SUSPENSION/ STEERING	13
CHASSIS	REAR WHEEL/BRAKE/SUSPENSION	14
CHASSIS	HYDRAULIC BRAKE	15
ELECTRICAL	BATTERY/CHARGING SYSTEM	16
ELECTRICAL	IGNITION SYSTEM	17
ELECTRICAL	ELECTRIC STARTER	18
ELECTRICAL	LIGHTS/INSTRUMENTS/SWITCHES	19
ELECTRICAL	WIRING DIAGRAM	20
	TROUBLESHOOTING	21
	INDEX	22

1. GENERAL INFORMATION

GENERAL SAFETY	1-1	TOOLS	1-7
SERVICE RULES	1-1	CABLE & HARNESS ROUTING	1-9
MODEL IDENTIFICATION	1-2	EMISSION CONTROL SYSTEMS	1-14
SPECIFICATIONS	1-3	EMISSION CONTROL INFORMATION LABELS (U.S.A. only)	1-16
TORQUE VALUES	1-5		

GENERAL SAFETY

⚠ WARNING

If the engine must be running to do some work, make sure the area is well-ventilated. Never run the engine in a closed area. The exhaust contains poisonous carbon monoxide gas that can cause loss of consciousness and may lead to death.

⚠ WARNING

Gasoline is extremely flammable and is explosive under certain conditions. Work in a well ventilated area with the engine stopped. Do not smoke or allow flames or sparks in your working area or where gasoline is stored.

⚠ WARNING

Inhaled asbestos fibers have been found to cause respiratory disease and cancer. Never use an air hose or dry brush to clean brake assemblies. Use an OSHA-approved vacuum cleaner or alternate method approved by OSHA designed to minimize the hazard caused by airborne asbestos fibers.

⚠ WARNING

- *The battery gives off explosive gases; keep sparks, flames and cigarettes away. Provide adequate ventilation when charging.*
- *The battery contains sulfuric acid (electrolyte). Contact with skin or eyes may cause severe burns. Wear protective clothing and a face shield.*
  - *— If electrolyte gets on your skin, flush with water.*
  - *— If electrolyte gets in your eyes, flush with water for at least 15 minutes and call a physician.*
- *Electrolyte is poisonous.*
  - *— If swallowed, drink large quantities of water or milk and follow with milk of magnesia or vegetable oil and call a physician.*

CAUTION

- *Used engine oil may cause skin cancer if repeatedly left in contact with the skin for prolonged periods. Although this is unlikely unless you handle used oil on a daily basis, it is still advisable to thoroughly wash your hands with soap and water as soon as possible after handling used oil.*

SERVICE RULES

1. Use genuine HONDA or HONDA-recommended parts and lubricants or their equivalent. Parts that do not meet HONDA's design specifications may damage the motorcycle.
2. Use the special tools designed for this product.
3. Use only metric tools when servicing this motorcycle. Metric bolts, nuts, and screws are not interchangeable with English fasteners. The use of incorrect tools and fasteners may damage the motorcycle.
4. Install new gaskets, O-rings, cotter pins, lock plates, etc. when reassembling.
5. When tightening a series of bolts or nuts, begin with the larger-diameter or inner bolts first, and tighten to the specified torque diagonally, unless a particular sequence is specified.
6. Clean parts in cleaning solvent upon disassembly. Lubricate any sliding surfaces before reassembly
7. After reassembly, check all parts for proper installation and operation.

MODEL IDENTIFICATION

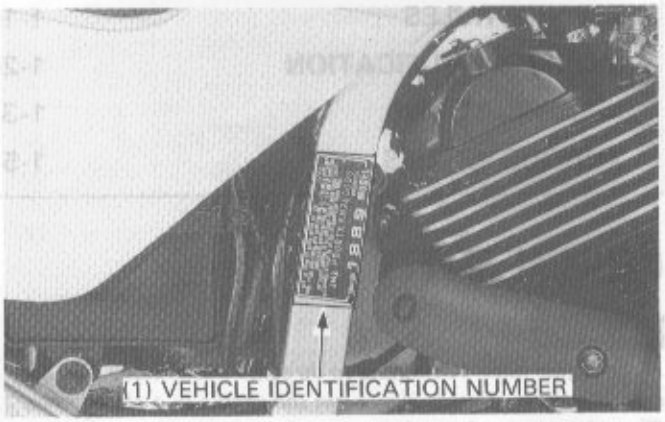

The vehicle identification number (VIN) is on the right side of the frame pipe.

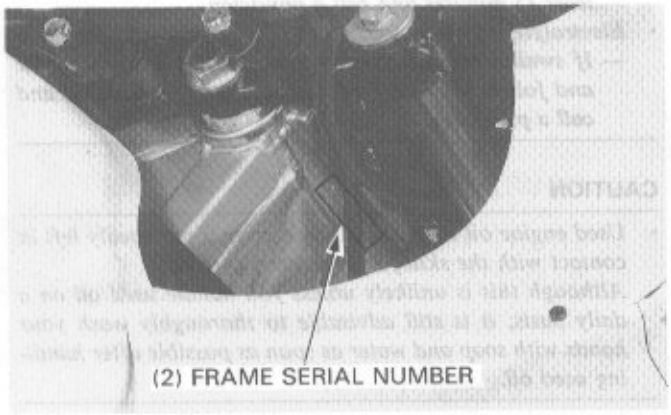

The frame serial number is stamped on the right side of the steering head.

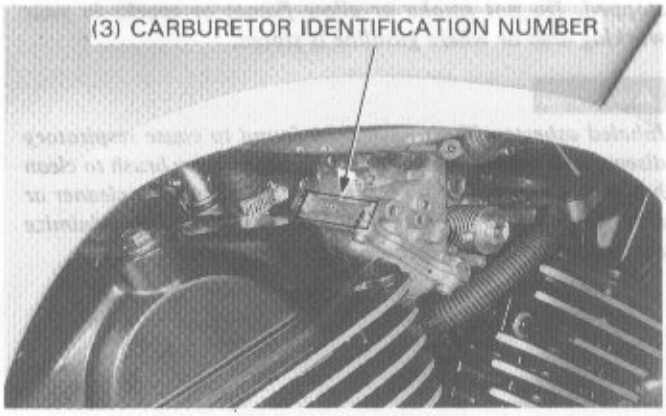

The carburetor identification number is on the front carburetor body (right-side).

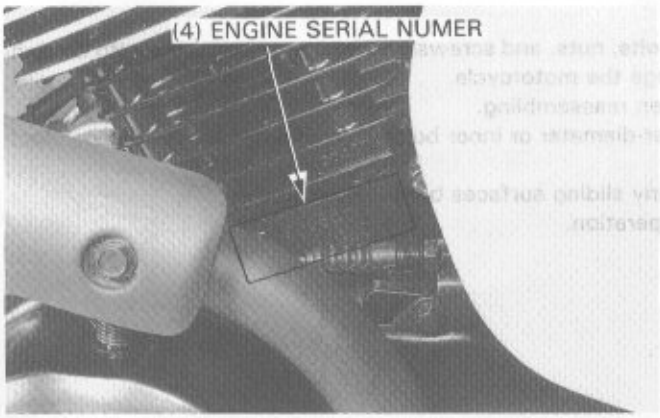

The engine serial number is stamped on the lower right side of the rear cylinder.

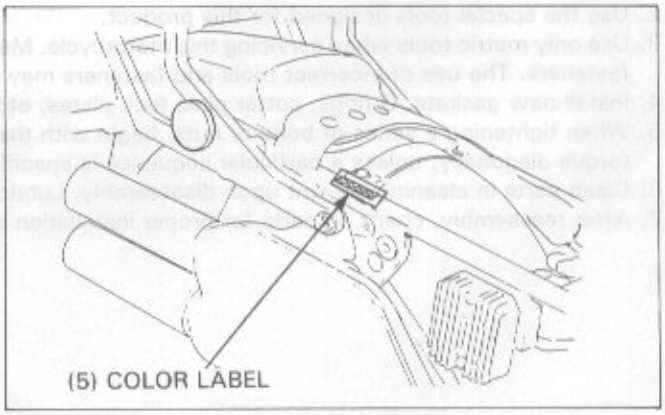

The color label is attached to the right frame tube under the seat. When ordering a color coded part, always specify its designated color code.

SPECIFICATIONS

ITEM				SPECIFICATIONS
DIMENSIONS	Overall length			2,265 mm (89.2 in)
	Overall width			865 mm (34.1 in)
	Overall height			1,265 mm (49.8 in)
	Wheelbase			1,505 mm (59.3 in)
	Seat height			850 mm (33.5 in)
	Ground clearance			225 mm (8.9 in)
	Dry weight			181 kg (399.0 lb)
	Curb weight			201 kg (443.1 lb)
FRAME	Type			Semi double cradle
	Front suspension, travel			Telescopic fork, 200 mm (7.9 in)
	Rear suspension, travel			Swing arm/Shock absorber, 187 mm (7.4 in)
	Front tire size			90/90–21 54S
	Rear tire size			130/80–17 65S
	Cold tire pressures	Up to 90 kg (200 lbs) load	Front	29 psi (2.00 kg/cm², 200 kPa)
			Rear	29 psi (2.00 kg/cm², 200 kPa)
		Up to vehicle capacity load	Front	29 psi (2.00 kg/cm², 200 kPa)
			Rear	29 psi (2.00 kg/cm², 200 kPa)
	Front brake			Hydraulic disc
	Rear brake			Internal expanding shoes
	Fuel capacity			18 liters (4.8 US gal, 4.0 Imp gal)
	Fuel reserve capacity			2.9 liters (0.77 US gal, 0.64 Imp gal)
	Caster angle			28°
	Trail			108 mm (4.3 in)
	Fork leg oil capacity			549 cm³ (185.7 US oz, 19.3 Imp oz)
ENGINE	Type			Water cooled 4-stroke
	Cylinder arrangement			2 cylinders, 52°V
	Bore and stroke			75.0 x 66.0 mm (2.95 x 2.60 in)
	Displacement			583.2 cm³ (35.59 cu in)
	Compression ratio			9.2 : 1
	Valve train			Silent, multi-link chain drive and OHC with rocker arms
	Oil capacity			2.8 lit (2.96 US qt, 2.46 Imp qt) after disassembly
				2.2 lit (2.32 US qt, 1.94 Imp qt) after draining
	Lubrication system			Forced pressure and wet sump
	Air filtration			Paper filter
	Cylinder compression			1177 kPa (12.0 kg/cm², 171 psi)
	Intake valve	Opens		10° (BTDC) at 1 mm lift
		Closes		40° (ABDC) at 1 mm lift
	Exhaust valve	Opens		40° (BBDC) at 1 mm lift
		Closes		10° (ATDC) at 1 mm lift
	Valve clearance (cold)	intake		0.15 mm (0.006 in)
		exhaust		0.20 mm (0.008 in)
	Engine dry weight			59.5 kg (131.17 lb)

< >: California model

ITEM			SPECIFICATIONS
CARBURETOR	Type		Piston valve, dual carburetor
	I.D. number		VDFHA <VDFJA>
	Main jet		FRONT: #120 REAR: #120
	Pilot screw opening		2-1/2 turns out
	Float level		7 mm (0.28 in)
	Idle speed		1,300 ± 100 rpm
DRIVE TRAIN	Clutch		Wet, multi-plate
	Transmission		5-speed constant mesh
	Primary reduction		1.888 (68/36)
	Final reduction		3.133 (47/15)
	Gear ratio I		2.571 (36/14)
	Gear ratio II		1.777 (32/18)
	Gear ratio III		1.380 (29/21)
	Gear ratio IV		1.125 (27/24)
	Gear ratio V		0.961 (25/26)
	Gear shift pattern		Left foot operated return system, 1—N—2—3—4—5
ELECTRICAL	Ignition		DC-CDI
	Ignition timing	Initial	10° BTDC at idle
		Full advance	30° BTDC at 4,500 rpm
	Alternator		AC GENERATOR 0.31 kw/5,000 rpm
	Battery capacity		12V 12AH
	Spark plug		NGK / ND
		Standard	DPR8EA—9 / X24EPR—U9
		For cold climate (below 5°C/41°F)	DPR7EA—9 / X22EPR—U9
		For extended high speed driving	DPR9EA—9 / X27EPR—U9
	Spark plug gap		0.8—0.9 mm (0.031—0.035 in)
	Fuse	Main	30A
		Sub	10A x 3
			15A
	Starting system		Electrical stater
	Headlight		12V 60/55W
	Position light		12V 4W
	Turn signal light		12V 21W
	Stop & taillight		12V 21/5W
	Meter lights		12V 1.7W x 3
	Indicator light	Neutral	12V 3.4W
		High beam	12V 1.7W
		Turn signal	12V 3.4W
		Oil warning	12V 3.4W

TORQUE VALUES

ENGINE

ITEM		Q'TY	THREAD DIA. (mm)	TORQUE N·m (kg-m, ft-lb)	REMARKS
Oil pressure switch		1	—	12 (1.2, 9)	Apply sealant
Spark plug		1	12	14 (1.4, 10)	
Engine oil drain bolt		1	14	35 (3.5, 25)	
Oil filter		1	20	10 (1.0, 7)	
Fuel cup		1	24	4 (0.4, 2.9)	
Valve adjusting screw lock nut		6	7	23 (2.3, 17)	Apply oil
Drum stopper plate mounting bolt		1	6	12 (1.2, 9)	Apply locking agent
Primary drive gear mounting bolt		1	12	90 (9.0, 65)	UBS bolt
Oil pump driven sprocket bolt		1	6	15 (1.5, 11)	
Clutch lock nut		1	18	130 (13.0, 94)	
Clutch lifter plate bolt		1	6	10 (1.0, 7)	
Oil pass pipe bolt	(7 mm)	2	7	10 (1.0, 7)	
	(8 mm)	1	8	23 (2.3, 17)	
Flywheel bolt		1	12	130 (13.0, 94)	Left-hand threads/ UBS bolt
Starter clutch torx bolt		3	8	30 (3.0, 22)	Apply locking agent
Cylindr head cover bolt		4	6	10 (1.0, 7)	Special bolt
Camshaft holder	(8 mm bolt)	6	8	23 (2.3, 17)	
	(8 mm nut)	2	8	23 (2.3, 17)	
	(6 mm bolt)	4	6	10 (1.0, 7)	
Cylinder head	(10 mm nut)	8	10	48 (4.8, 35)	
	(8 mm bolt)	4	8	23 (2.3, 17)	
	(8 mm nut)	2	8	23 (2.3, 17)	
	(6 mm bolt)	2	6	10 (1.0, 7)	
Cam sprocket bolt		4	7	23 (2.3, 17)	
Cam chain tensioner mounting bolt		4	6	10 (1.0, 7)	
Connecting rod bearing cap nut		4	9	34 (3.4, 25)	
Bearing set plate		1	6	10 (1.0, 7)	Apply locking agent
Timing hole cap		1	14	10 (1.0, 7)	Apply MoS_2 grease
Crankcase hole cap		1	30	15 (1.5, 11)	Apply MoS_2 grease
Gearshift spindle return pin		1	8	23 (2.3, 17)	
Starter motor cable		2	6	10 (1.0, 7)	
Drive sprocket		2	6	10 (1.0, 7)	
Cylinder stud bolt	(10 x 193.5 mm)	2	10	40 (4.0, 29)	
	(10 x 197 mm)	6	10	40 (4.0, 29)	
	(8 x 197 mm)	2	8	25 (2.5, 18)	
Crankcase cover bolt	(6 x 35 mm)	12	6	12 (1.2, 9)	
	(6 x 45 mm)	13	6	12 (1.2, 9)	
Stator socket bolt		4	6	12 (1.2, 9)	
Thermostatic switch		1	—	18 (1.8, 13)	

FRAME

ITEM	Q'TY	THREAD DIA. (mm)	TORQUE N·m (kg-m, ft-lb)	REMARKS
Side cover	2	6	4.3 (0.43, 3)	
Lower cowling	2	6	10 (1.0, 7)	
Seat bolt	2	8	10 (1.0, 7)	
Air cleaner case	4	6	10 (1.0, 7)	
Exhaust pipe protectors	6	6	12 (1.2, 7)	
Choke lever	1	6	10 (1.0, 7)	

FRAME

ITEM	Q'TY	THREAD DIA. (mm)	TORQUE N·m (kg-m, ft-lb)	REMARKS
Rear axle nut	1	16	95 (9.5, 69)	
Spokes (front/rear)	—	B.C. 3.5	3.8 (0.38, 2.7)	
Swingarm/engine pivot nut	1	14	110 (11.0, 80)	Self-locking
Engine mounting nut (upper/lower)	2	10	55 (5.5, 40)	
Engine bracket nut	2	8	27 (2.7, 20)	
Exhaust pipe band bolt	1	8	22 (2.2, 16)	
Exhaust pipe joint nut	4	8	27 (2.7, 20)	Cap nut
Muffler mounting bolt (front)	1	8	40 (4.0, 29)	
(rear)	1	10	65 (6.5, 47)	With carrier
Rear carrier bolt (front/left)	1	8	45 (4.5, 33)	
(rear)	2	8	27 (2.7, 20)	
Turn signal stay bolt	2	8	27 (2.7, 20)	
Handlebar upper holder	4	8	26 (2.6, 19)	
Brake disc	6	8	40 (4.0, 29)	Apply oil
Front wheel hub cover	3	4	1.5 (0.15, 1.1)	
Front axle	1	16	65 (6.5, 47)	
Axle holder nut	4	6	12 (1.2, 9)	
Fork slider socket bolt	2	8	20 (2.0, 14)	
Fork leg pinch bolt (upper)	4	8	27 (2.7, 20)	
(lower)	4	8	35 (3.5, 25)	
Fork tube cap bolt	2	37	23 (2.3, 17)	
Gearshift pedal bolt	1	6	10 (1.0, 7)	
Steering bearing adjustment nut	1	26	3 (0.3, 2.2)	Tighten the nut with the steering stem pushed up.
Steering stem nut	1	24	100 (10.0, 72)	
Driven sprocket nut	6	10	44 (4.4, 32)	Apply oil
Shock absorber lower mount lock nut	1	14	68 (6.8, 49)	Apply locking agent
Shock absorber spring lock nut	1	50	90 (9.0, 65)	
Shock absorber mounting bolt (upper/lower)	2	10	45 (4.5, 33)	Self-locking
Shock arm-to-swing arm nut	1	12	105 (10.5, 76)	
Shock link-to-shock arm nut	1	10	65 (6.5, 47)	Self-locking
Shock link-to-frame nut	1	10	65 (6.5, 47)	Self-locking
Bleed valve	2	8	5.5 (0.55, 4)	
Caliper bolt	1	8	27 (2.7, 20)	
Brake hose joint	1	10	35 (3.5, 25)	
Brake joint nut	1	10	17 (1.7, 12)	
Caliper bracket bolt	2	8	27 (2.7, 20)	
Brake hose bolt	1	10	35 (3.5, 25)	
Caliper pivot bolt	1	8	23 (2.3, 17)	
Side stand pivot nut	1	10	40 (4.0, 29)	Self-locking
Fuel valve lock nut	1	18	40 (4.0, 29)	
Fuel tank mounting bolt	1	8	27 (2.7, 20)	
Rear step holder bracket	3	8	33 (3.3, 24)	
Right foot peg	1	12	85 (8.5, 61)	Apply locking agent
Left foot peg	1	10	65 (6.5, 47)	

Torque specifications listed above are for the most important tightening points. If a specification is not listed, follow the standards below.

STANDARD TORQUE VALUES

TYPE	TORQUE N·m (kg-m, ft-lb)	TYPE	TORQUE N·m (kg-m, ft-lb)
5 mm bolt and nut	5.3 (0.53, 4)	5 mm screw	4.3 (0.43, 3)
6 mm bolt and nut	10 (1.0, 7)	6 mm screw, 6 mm	
8 mm bolt and nut	22 (2.2, 16)	bolt with small head	9 (0.9, 7)
10 mm bolt and nut	35 (3.5, 25)	6 mm flange bolt and nut	12 (1.2, 9)
12 mm bolt and nut	55 (5.5, 40)	10 mm flange bolt, nut	40 (4.0, 29)

TOOLS

SPECIAL

DESCRIPTION	TOOL NUMBER	ALTERNATE TOOL	NUMBER	REFER TO SECTION
Oil filter wrench	07HAA–PJ70100			2
Oil pressure gauge	07506–3000000	Equivalent Commercially available in U.S.A		2
Oil pressure gauge attachment	07510–4220100			2
Valve clearance adjusting wrench	07908–KE90000	Valve adjust wrench	07908–KE90100	3
Vacuum gauge	07404–0030000	Vacuum gauge set	M937B–021–XXXXX	3
Compression gauge	07305–0010000			3
Clutch center holder	07923–KE10000	Clutch center holder	07HGB–001000A	7
Valve guide reamer (IN)	07984–2000001	Valve guide reamer	07984–200000C (U.S.A. only)	9
Valve guide reamer (EX)	07984–ZE20001	Valve guide reamer	07984–ZE2000C (U.S.A. only)	9
Valve guide driver attachment (IN)	07943–MF50100			9
Valve guide driver attachment (EX)	07943–MF50200			9
Bearing remover set	07936–3710001	Not available in U.S.A.		11
–remover handle	07936–3710100			
–bearing remover set	07936–3710600			
–remover sliding weight	07741–0010201	Remover weight	07936–3710200	
*Bearing driver attachment	07HMF–MM90400			11
Fork seal driver	07947–KA50100			13
Fork seal driver attachment	07947–KF00100			13
Steering stem socket	07916–3710100			13
Ball race remover	07953–MA00000	Adjustable bearing remover	07736–A01000A	13
Steering stem driver	07946–4300100	Steering stem dirver	07946–MB00000 with GN HT54	13
Needle bearing driver	07946–KA50000			14
Driver shaft	07946–MJ00100			14
Snap ring pliers	07914–3230001			2, 15

: The tools marked "" are new for this model.

COMMON

DESCRIPTION	TOOL NUMBER	ALTERNATE TOOL	NUMBER	REFER TO SECTION
Wrench, 10 x 12 mm	07708–0030200	Equivalent Commercially available in U.S.A		3
Spanner C, 5.8 x 6.1 mm	07701–0020300			3
Float level gauge	07401–0010000			4
Lock nut wrench, 17 x 27 mm	07716–0020300			7
Extention bar	07716–0020500	Equivalent commercially available in U.S.A.		7, 13, 14
Gear holder	07724–0010100	Not available in U.S.A.		7
Rotor puller	07733–0020001			8
Flywheel holder	07725–0040000			8
Valve guide driver, 5.5 mm (IN)	07742–0010100			9
Valve guide driver, 6.6 mm (EX)	07742–0010200	Valve guide driver	07942–6570100	9
Valve spring compressor	07757–0010000			9
Driver	07749–0010000			11, 13, 14
Attachment, 42 x 47 mm	07746–0010300			11, 13, 14
Attachment, 52 x 55 mm	07746–0010400			11
Pilot, 20 mm	07746–0040500			11
Pilot, 22 mm	07746–0041000			11
Pilot, 25 mm	07746–0040600			11
Bearing remover shaft	07746–0050100	Equivalent commercially available in U.S.A.		13, 14
Bearing remover head, 15 mm	07746–0050400			13
Attachment, 32 x 35 mm	07746–0010100			13, 14
Pilot, 15 mm	07746–0040300			13
Lock nut wrench, 30 x 32 mm	07716–0020400	Equivalent commercially available in U.S.A.		13
Bearing remover head, 17 mm	07746–0050500			14
Pin spanner	89201–KA4–811			14
Pin spanner	89202–KA4–811			14
Attachment, 37 x 40 mm	07746–0010200			14
Pilot, 17 mm	07746–0040400			14
Attachment, 24 x 26 mm	07746–0010700			14
TESTER:				
Digital multi-tester (KOWA)	07411–0020000		or KS–AHM–32–003 (U.S.A. only)	16, 17, 18, 19
Circuit tester (SANWA) or	07308–0020000			16, 17, 18, 19
Circuit tester (KOWA)	TH–5H			16, 17, 18, 19
Honda battery tester	07GMJ–0010000			16
Christie battery charger	MC1012/2	U.S.A. only		16

VALVE SEAT CUTTER

DESCRIPTION		TOOL NUMBER	REFER TO SECTION
Cutter holder	IN 5.5 mm	07781–0010101	9
	EX 6.6 mm	07781–0010201	
Float cutter	IN 28 mm (32°)	07780–0012100	
	EX 35 mm (32°)	07780–0012300	
Interior cutter	IN 30 mm (60°)	07780–0014000	
	EX 37.5 mm (60°)	07780–0014100	
Seat cutter	IN 27.5 mm (45°)	07780–0010200	
	EX 35 mm (45°)	07780–0010400	

CABLE AND HARNESS ROUTING

Note the following when routing cables and wire harnesses.

- A loose wire, harness or cable can be a safety hazard. After clamping, check each wire to be sure.
- Do not squeeze wires against the weld or end of its clamp when a weld-on clamp is used.
- Secure wires and wire harnesses to the frame with their respective wire bands at the designated locations. Tighten the bands so that only the insulated surfaces contact the wires or wire harnesses.
- Route harnesses so they are not pulled taut or have no excessive slack.
- Protect wires and harnesses with electrical tape or tubes if they contact a sharp edge or corner. Clean the attaching surface thoroughly before applying tape.
- Do not use wires or harnesses with broken insulators. Repair by wrapping them with protective tape or replace them.
- Route wire harnesses to avoid sharp edges or corners.
- Also avoid the projected ends of bolts and screws.
- Keep wire harnesses away from the exhaust pipes and other hot parts.
- Be sure grommets are seated in their grooves properly.
- After clamping, check each harness to be certain that it is not interfering with any moving or sliding parts.
- Wire harnesses routed a long the handlebar should not be pulled taut, have excessive slack, be pinched, or interfere with adjacent or surrounding parts in all steering positions.
- After routing, check that the wire harnesses are not twisted or kinked.
- Do not bend or twist control cables. Damaged control cables will not operate smoothly and may stick or bind.

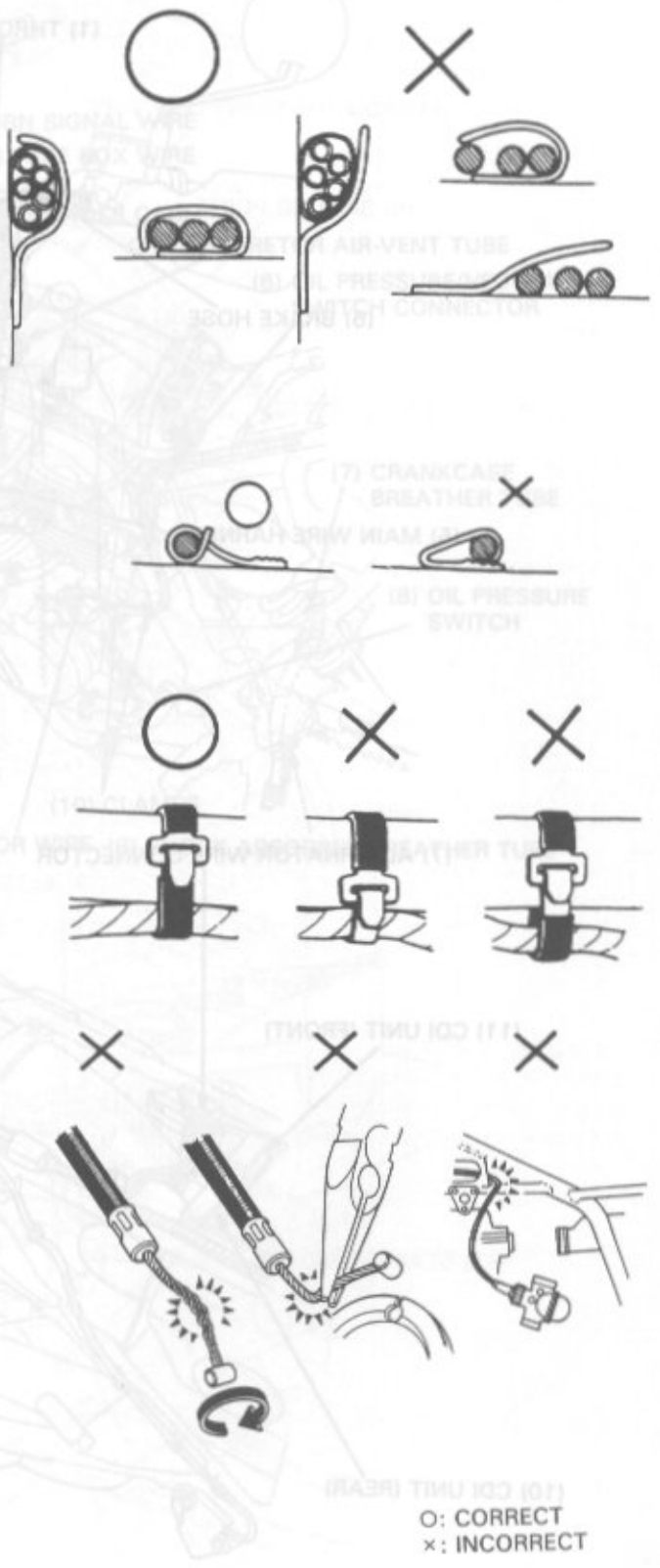

O: CORRECT
×: INCORRECT

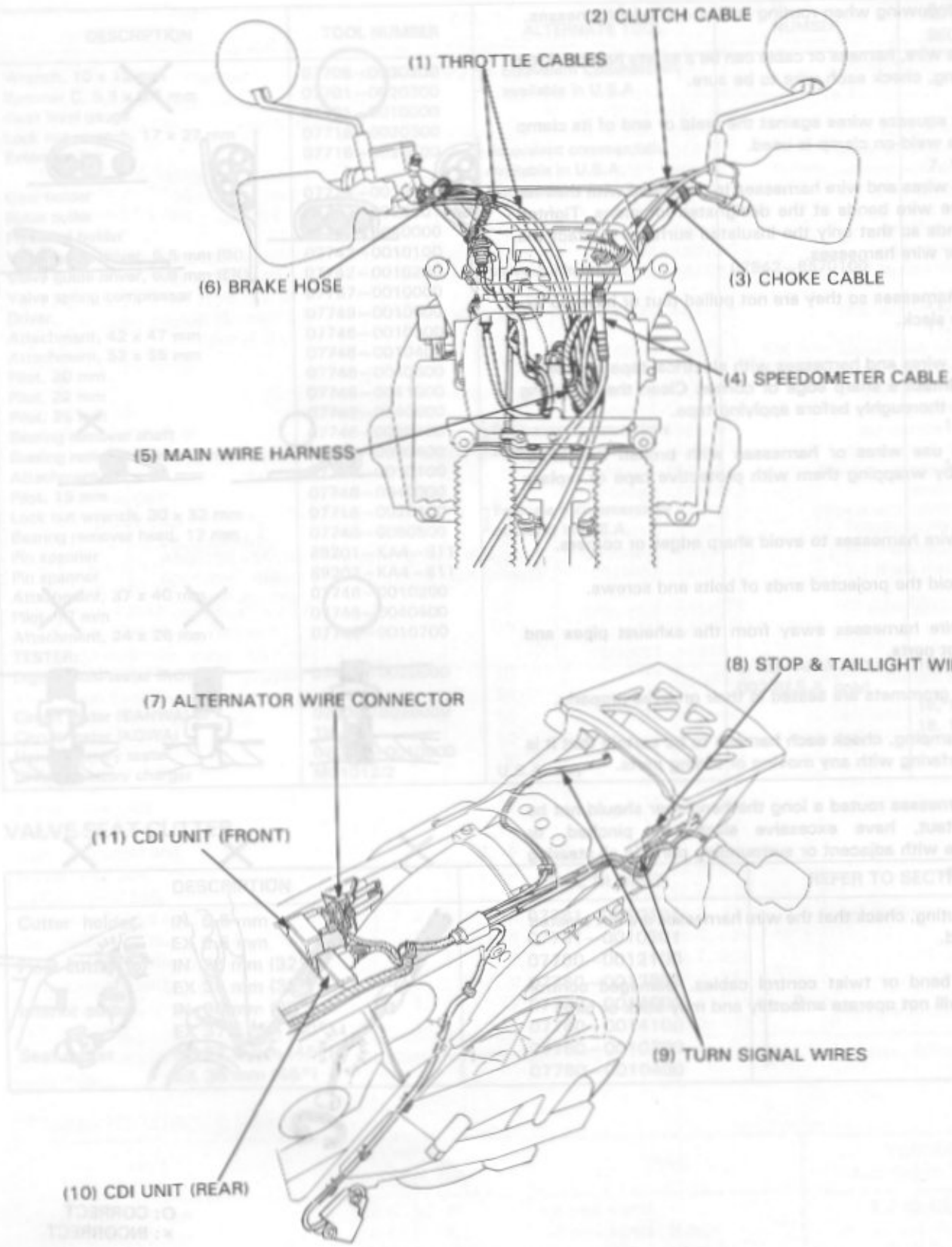
(2) CLUTCH CABLE
(1) THROTTLE CABLES
(6) BRAKE HOSE
(3) CHOKE CABLE
(4) SPEEDOMETER CABLE
(5) MAIN WIRE HARNESS
(8) STOP & TAILLIGHT WIRE
(7) ALTERNATOR WIRE CONNECTOR
(11) CDI UNIT (FRONT)
(9) TURN SIGNAL WIRES
(10) CDI UNIT (REAR)

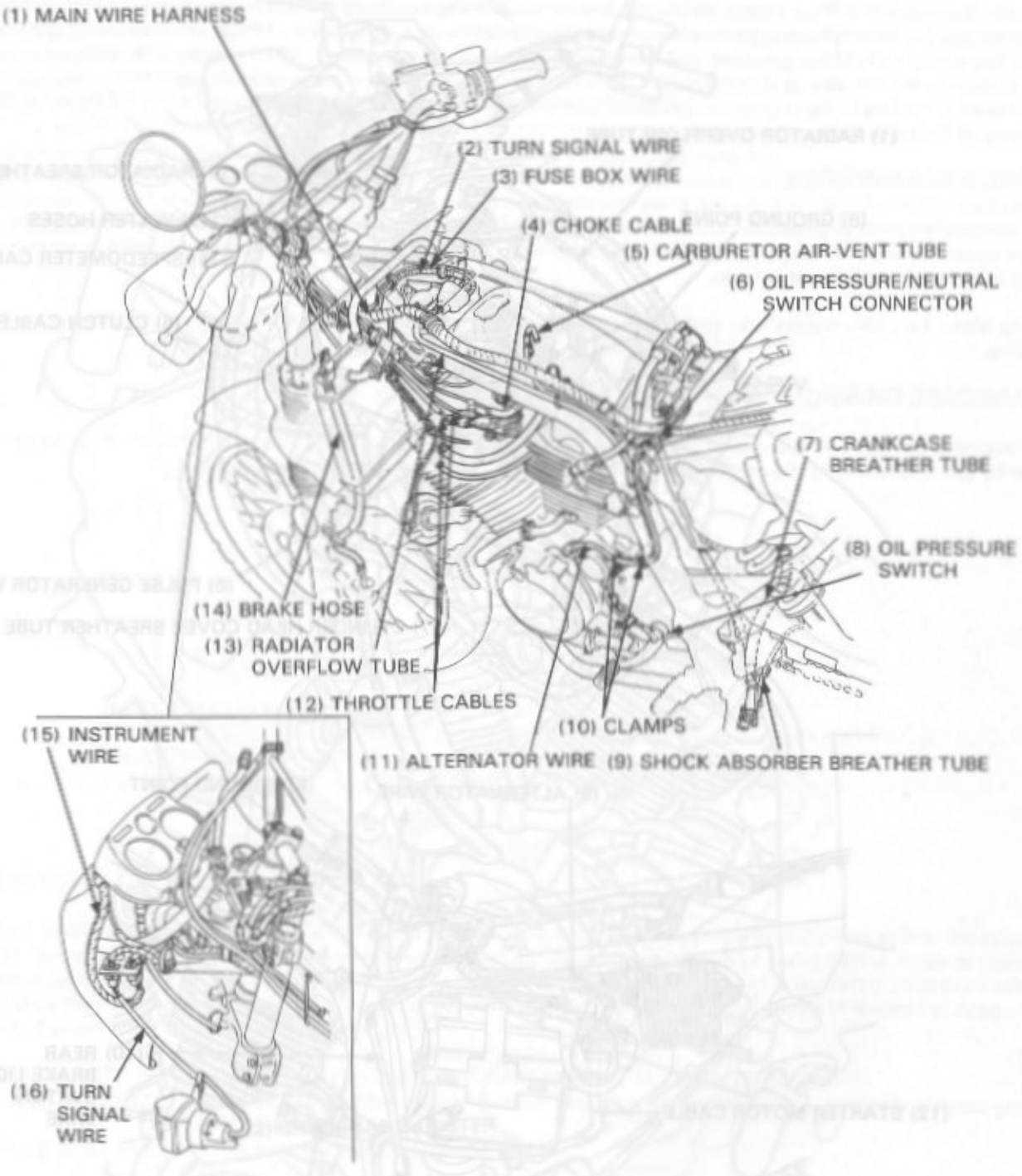
(1) MAIN WIRE HARNESS
(2) TURN SIGNAL WIRE
(3) FUSE BOX WIRE
(4) CHOKE CABLE
(5) CARBURETOR AIR-VENT TUBE
(6) OIL PRESSURE/NEUTRAL SWITCH CONNECTOR
(7) CRANKCASE BREATHER TUBE
(8) OIL PRESSURE SWITCH
(9) SHOCK ABSORBER BREATHER TUBE
(10) CLAMPS
(11) ALTERNATOR WIRE
(12) THROTTLE CABLES
(13) RADIATOR OVERFLOW TUBE
(14) BRAKE HOSE
(15) INSTRUMENT WIRE
(16) TURN SIGNAL WIRE

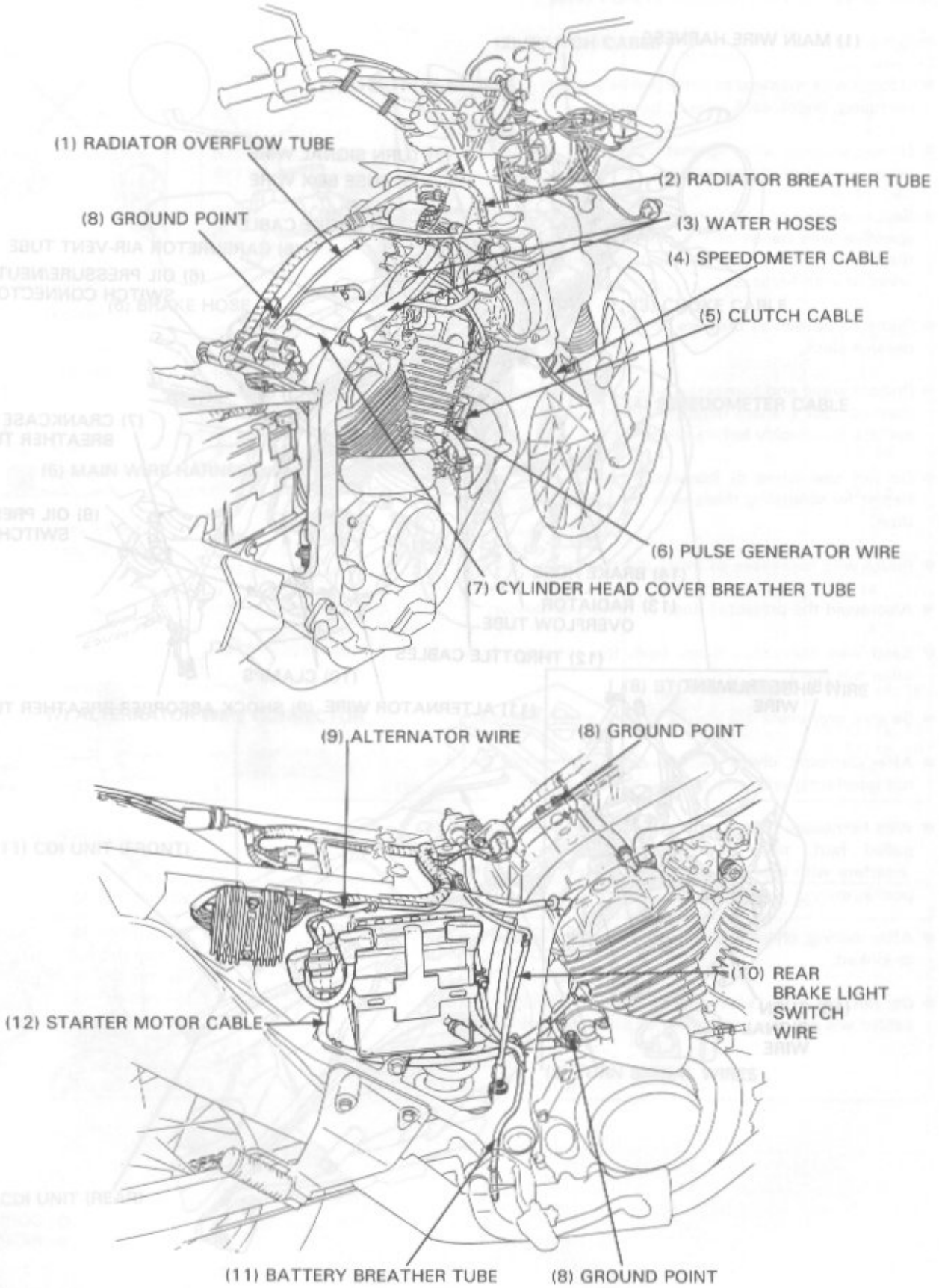
(1) RADIATOR OVERFLOW TUBE
(2) RADIATOR BREATHER TUBE
(8) GROUND POINT
(3) WATER HOSES
(4) SPEEDOMETER CABLE
(5) CLUTCH CABLE
(6) PULSE GENERATOR WIRE
(7) CYLINDER HEAD COVER BREATHER TUBE
(9) ALTERNATOR WIRE
(8) GROUND POINT
(10) REAR BRAKE LIGHT SWITCH WIRE
(12) STARTER MOTOR CABLE
(11) BATTERY BREATHER TUBE
(8) GROUND POINT

CALIFORNIA MODEL ONLY

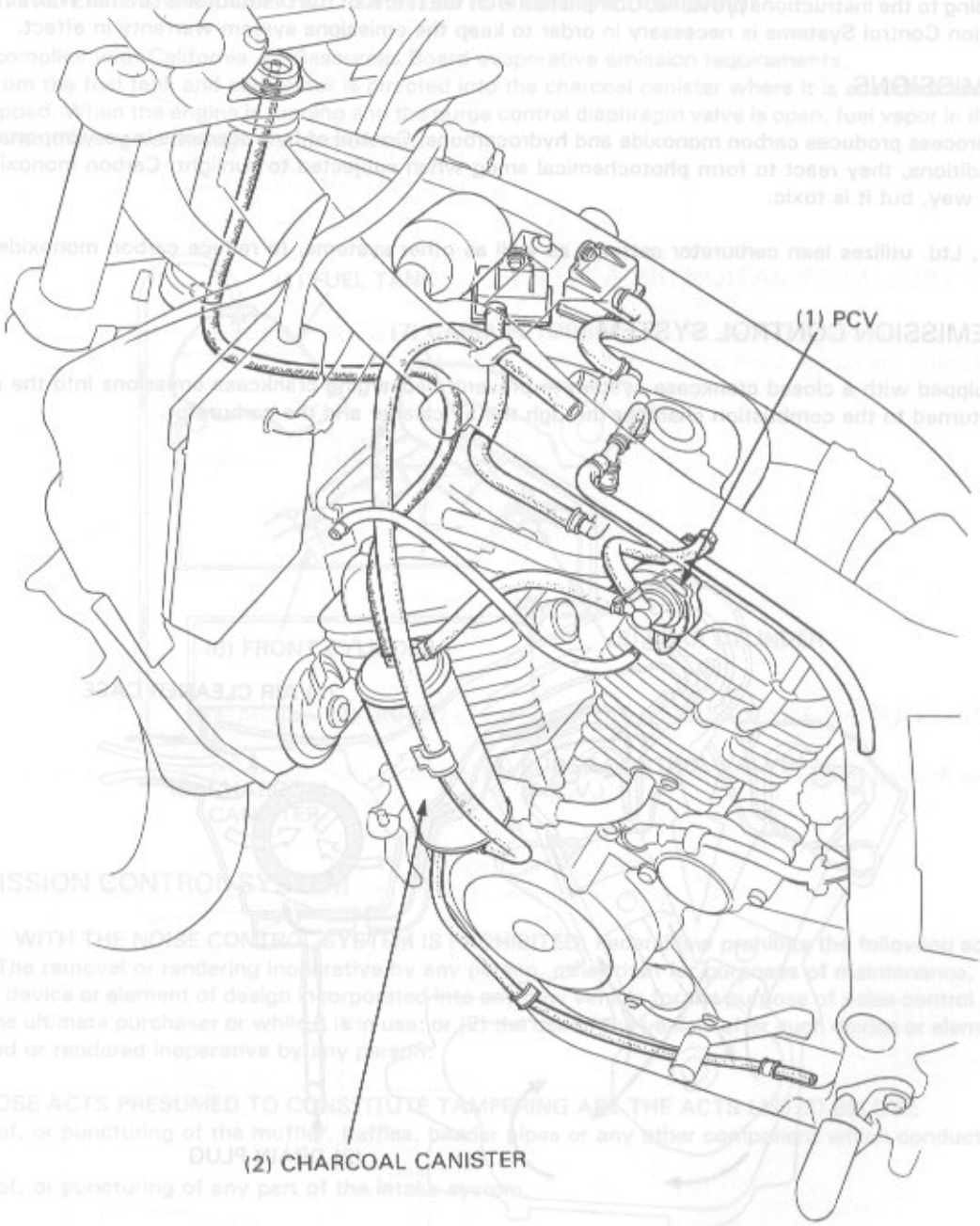

EMISSION CONTROL SYSTEMS

The U.S. Environmental Protection Agency and California Air Resources Board (CARB) require manufacturers to certify that their motorcycles comply with applicable exhaust emissions standards during their useful life, when operated and maintained according to the instructions provided, and that motorcycles built after January 1, 1983 comply with applicable noise emission standards for one year or 6,000 km (3,730 miles) after the time of sale to the ultimate purchaser, when operated and maintained according to the instructions provided. Compliance with the terms of the Distributor's Limited Warranty for Honda Motorcycle Emission Control Systems is necessary in order to keep the emissions system warranty in effect.

SOURCE OF EMISSIONS

The combustion process produces carbon monoxide and hydrocarbons. Control of hydrocarbons is very important because, under certain conditions, they react to form photochemical smog when subjected to sunlight. Carbon monoxide does not react in the same way, but it is toxic.

Honda Motor Co., Ltd. utilizes lean carburetor settings as well as other systems, to reduce carbon monoxide and hydrocarbons.

CRANKCASE EMISSION CONTROL SYSTEM

The engine is equipped with a closed crankcase system to prevent discharging crankcase emissions into the atmosphere. Blow-by gas is returned to the combustion chamber through the air cleaner and the carburetor.

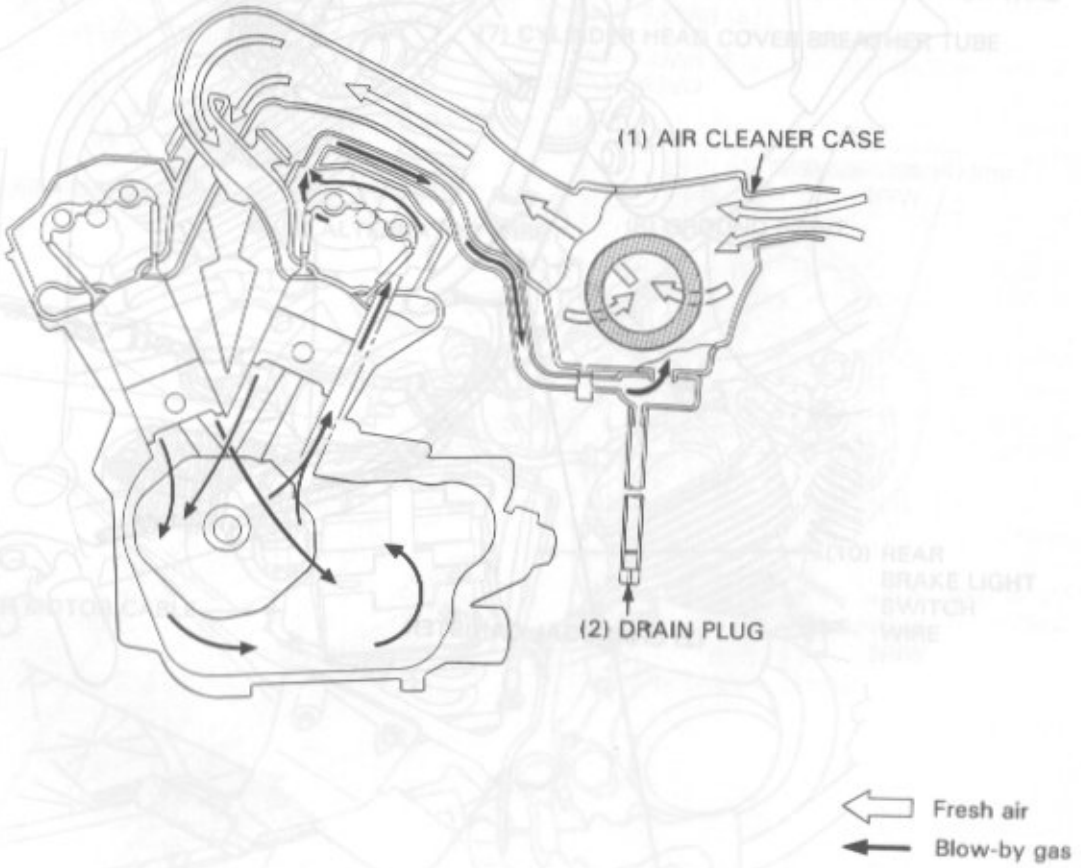

EXHAUST EMISSION CONTROL SYSTEM

The exhaust emission control system is composed of a lean carburetor setting, and no adjustments should be made except idle speed adjustment with the throttle stop screw. The exhaust emission control system is separate from the crankcase emission control system.

EVAPORATIVE EMISSION CONTROL SYSTEM (California model only)

This model complies with California Air Resources Board evaporative emission requirements.
Fuel vapor from the fuel tank and carburetor is directed into the charcoal canister where it is adsorbed and stored while the engine is stopped. When the engine is running and the purge control diaphragm valve is open, fuel vapor in the charcoal canister is drawn into the engine through the carburetor.

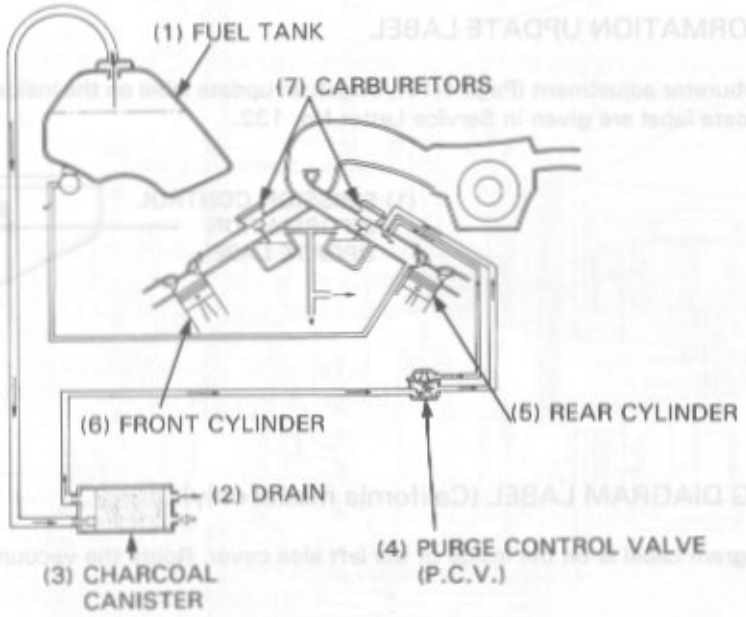

NOISE EMISSION CONTROL SYSTEM

TAMPERING WITH THE NOISE CONTROL SYSTEM IS PROHIBITED: Federal law prohibits the following acts or the causing thereof: (1) The removal or rendering inoperative by any person, other than for purposes of maintenance, repair or replacement, of any device or element of design incorporated into any new vehicle for the purpose of noise control prior to its sale or delivery to the ultimate purchaser or while it is in use; or (2) the use of the vehicle after such device or element of design has been removed or rendered inoperative by any person.

AMONG THOSE ACTS PRESUMED TO CONSTITUTE TAMPERING ARE THE ACTS LISTED BELOW:

1. Removal of, or puncturing of the muffler, baffles, header pipes or any other component which conducts exhaust gases.
2. Removal of, or puncturing of any part of the intake system.
3. Lack of proper maintenance.
4. Replacing any moving parts of the vehicle, or parts of the exhaust or intake system, with parts other than those specified by the manufacturer.

EMISSION CONTROL INFORMATION LABELS (U.S.A. only)

An Emission Control Information Label is located on the inside of the left side cover as shown. It contains basic tune-up specifications.

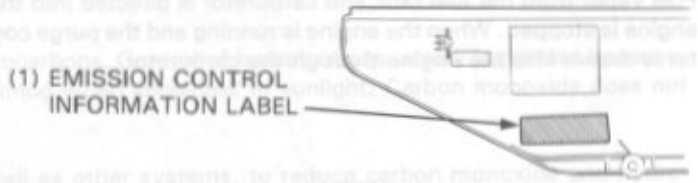

EMISSION CONTROL INFORMATION UPDATE LABEL

After making a high altitude carburetor adjustment (Page 4-19), attach an update label on the inside of the left side cover. Instructions for obtaining the update label are given in Service Letter No. 132.

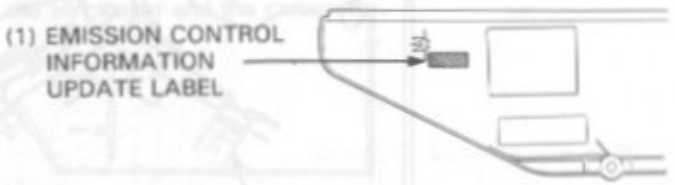

VACUUM HOSE ROUTING DIAGRAM LABEL (California model only)

The Vacuum Hose Routing Diagram Label is on the inside of the left side cover. Route the vacuum hoses as shown on this label.

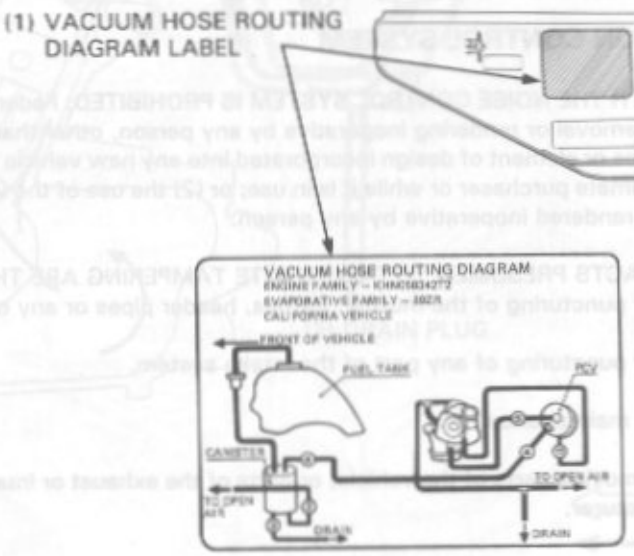

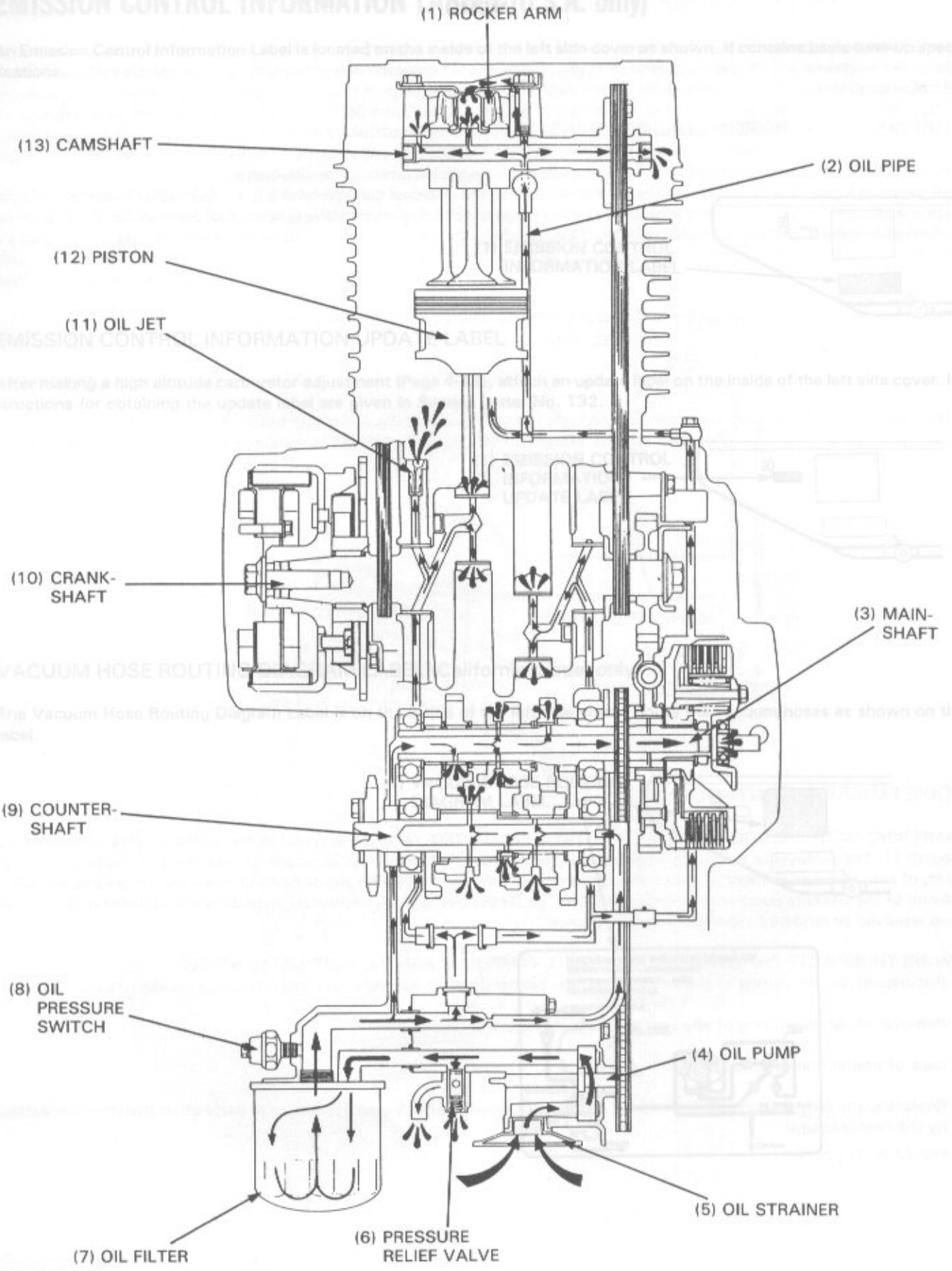
(1) ROCKER ARM
(13) CAMSHAFT
(2) OIL PIPE
(12) PISTON
(11) OIL JET
(10) CRANK-
SHAFT
(3) MAIN-
SHAFT
(9) COUNTER-
SHAFT
(8) OIL
PRESSURE
SWITCH
(4) OIL PUMP
(5) OIL STRAINER
(6) PRESSURE
RELIEF VALVE
(7) OIL FILTER

2. LUBRICATION

SERVICE INFORMATION	2-1	ENGINE OIL FILTER REPLACEMENT	2-4
TROUBLESHOOTING	2-2	OIL PRESSURE CHECK	2-4
ENGINE OIL LEVEL CHECK	2-3	OIL PUMP	2-5
ENGINE OIL CHANGE	2-3	LUBRICATION POINTS	2-10

SERVICE INFORMATION

GENERAL

- It is necessary to remove the engine from the frame to service the oil pump.

CAUTION

- *Used engine oil may cause skin cancer if repeatedly left in contact with the skin for prolonged periods. Although this is unlikely unless you handle used oil on a daily basis, it is still advisable to thoroughly wash your hands with soap and water as soon as possible after handling used oil.*

SPECIFICATIONS

Oil capacity	2.8 lit (2.96 US qt, 2.46 Imp qt) after disassembly. 2.4 lit (2.54 US qt, 2.11 Imp qt) at oil filter and oil change. 2.2 lit (2.32 US qt, 1.94 Imp qt) after draining.
Recommended oil	HONDA 4 stroke oil or equivalent API service classification: SE or SF VISCOSITY: SAE 20 W–50/10 W–40

NOTE

- Use SAE 10 W–40 oil when the outside temperature is below 0° C (32° F).

Other viscosities shown in the chart may be used when the average temperature in your riding area is within the indicated range.

Oil pump

ITEM	STANDARD	SERVICE LIMIT
Rotor tip clearance	0.15 mm (0.006 in)	0.20 mm (0.008 in)
Pump body clearance	0.15–0.22 mm (0.006–0.009 in)	0.35 mm (0.014 in)
Pump end clearance	0.02–0.07 mm (0.001–0.003 in)	0.10 mm (0.004 in)
Oil pressure	490–588 kPa (5.0–6.0 kg/cm², 71–85 psi) at 5,000 rpm	—

TORQUE VALUES

Oil pressure switch	12 N·m (1.2 kg-m, 9 ft-lb)
Engine oil drain bolt	35 N·m (3.5 kg-m, 25 ft-lb)
Oil filter	10 N·m (1.0 kg-m, 7 ft-lb)

TOOLS

Special

Oil filter wrench	07HAA—PJ70100	
Oil pressure gauge	07506—3000000	Equivalent commercially available in U.S.A.
Oil pressure gauge attachment	07510—4220100	
Snap ring pliers	07914—3230001	

TROUBLESHOOTING

Oil level too low
- Normal oil consumption
- External oil leaks
- Worn piston rings

Oil contamination
- Oil not changed often enough
- Faulty head gasket
- Worn piston rings

Low oil pressure
- Faulty oil pump
- Clogged oil strainer
- Low oil level
- Faulty pressure relief valve
- Oil leaks

High oil pressure
- Faulty pressure relief valve
- Clogged oil filter or oil orifice

No oil pressure
- Too low oil level
- Broken oil pump drive or driven sprockets
- Broken oil pump drive chain
- Faulty oil pump
- Oil leaks

ENGINE OIL LEVEL CHECK

Support the motorcycle upright on level ground.
Start the engine and let it idle for a few minutes.

Stop the engine, remove the oil filler cap/dipstick and wipe it clean.
Check the oil level with the oil filler cap/dipstick by inserting it without screwing it in.

NOTE

- Do not screw the cap in when making this check.

If the oil level is below the lower level mark on the dipstick, fill to the upper level mark with the recommended oil (see below).

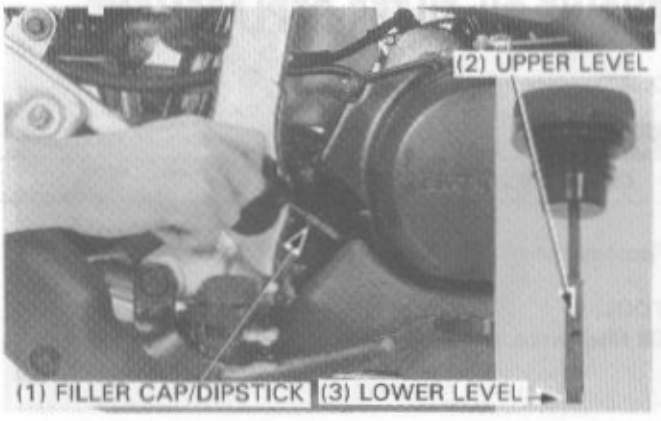

ENGINE OIL CHANGE

NOTE

- Change the engine oil with the engine warm and the motorcycle on its side stand to assure complete and rapid draining.

Remove the oil filler cap/dipstick and drain bolt.
With the engine stop switch OFF, start the starter motor for a few seconds to drain any oil which may be left in the engine.

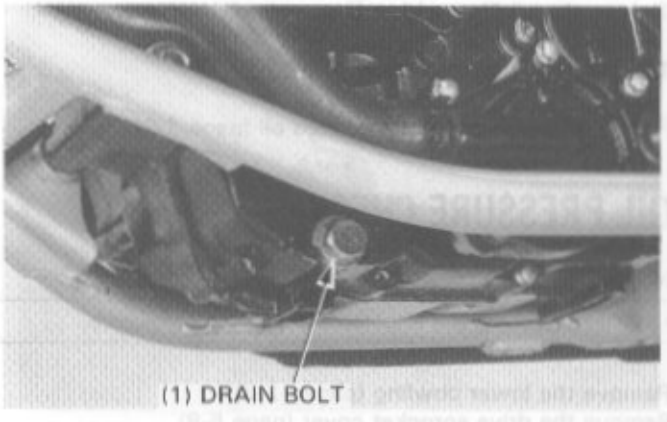

NOTE

- Do not operate the motor more than a few seconds.

After the oil has drained, check that the drain bolt sealing washer is in good condition, and install the bolt.

TORQUE: 35 N·m (3.5 kg-m, 25 ft-lb)

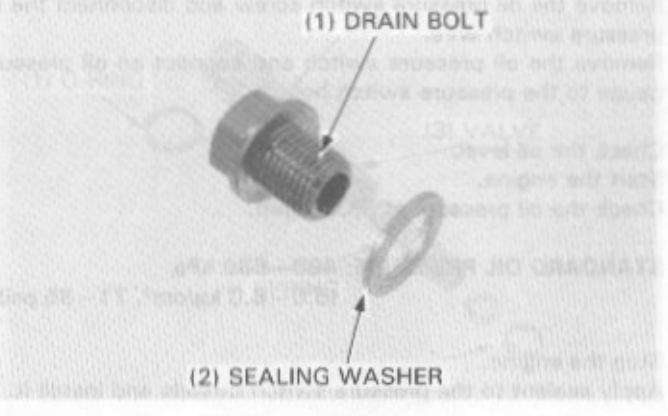

Fill the crankcase with the correct quantity of the recommended oil.

OIL CAPACITY:
2.8 lit (2.96 US qt, 2.46 Imp qt) after disassembly
2.4 lit (2.54 US qt, 2.11 Imp qt) at oil filter and oil change
2.2 lit (2.32 US qt, 1.94 Imp qt) after draining

RECOMMENDED OIL: Honda 4-stroke oil or equivalent
API service classification: SE or SF
VISCOSITY: SAE 20W–50/10W–40

Install the oil filler cap/dipstick.
Start the engine and let it idle for a few minutes.

Stop the engine and wait a few minutes, then check that the oil level is at the upper level mark with the motorcycle upright.
Check that there are no oil leaks.

ENGINE OIL FILTER REPLACEMENT

Drain the engine oil (page 2-3).

⚠ WARNING

- ***Do not replace the oil filter when the exhaust pipe is hot.***

Remove the oil filter with a filter wrench.

TOOL:
Oil filter wrench **07HAA—PJ70100**

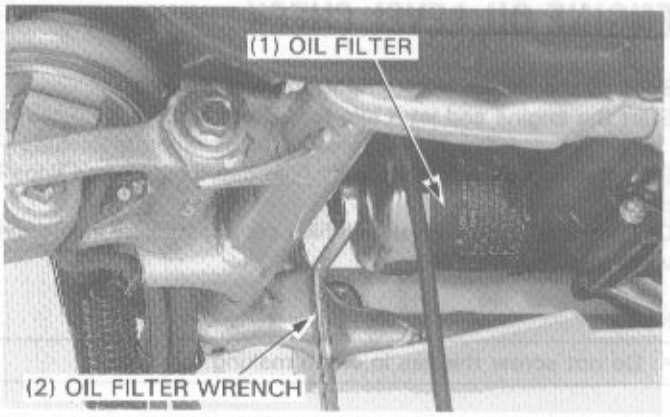

Apply oil to a new oil filter O-ring and install a new oil filter.
Tighten the oil filter with a filter wrench.

TORQUE: 10 N·m (1.0 kg-m, 7 ft-lb)

Fill the engine with recommended oil (page 2-3).

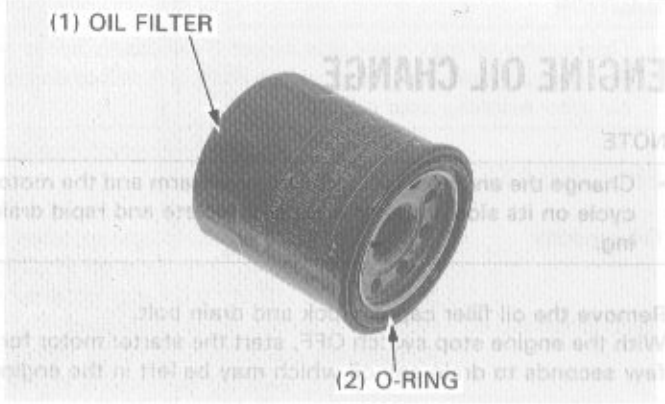

OIL PRESSURE CHECK

NOTE

- After warm up the engine, check the oil pressure.

Remove the lower cowling (page 12-3).
Remove the drive sprocket cover (page 5-8).

Remove the oil pressure switch screw and disconnect the oil pressure switch wire.
Remove the oil pressure switch and connect an oil pressure gauge to the pressure switch hole.

Check the oil level.
Start the engine.
Check the oil pressure at 5,000 rpm.

STANDARD OIL PRESSURE: 490—588 kPa
(5.0—6.0 kg/cm², 71—85 psi)

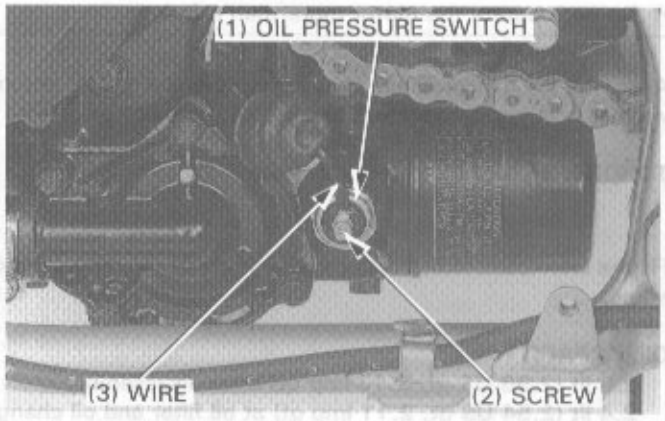

Stop the engine.
Apply sealant to the pressure switch threads and install it.

TORQUE: 12 N·m (1.2 kg-m, 9 ft-lb)

Connect the oil pressure switch wire.
Start the engine and check the oil pressure warning light goes out after one or two seconds.

TOOL:
Oil pressure gauge **07506—3000000**
Attachment **07510—4220100**
or equivalent commercially available in U.S.A.

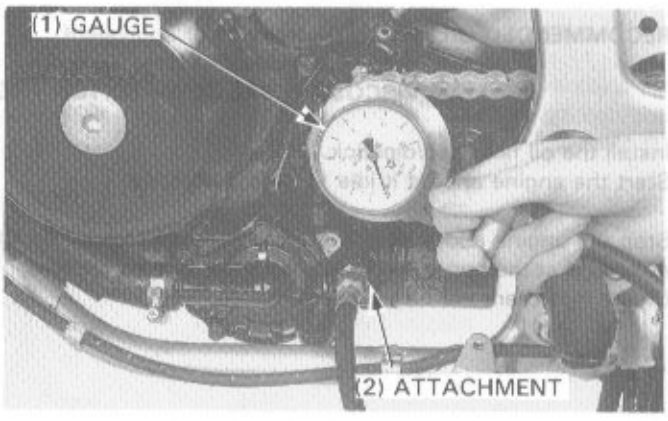

NOTE

- Route the oil pressure switch wire properly (page 1-11).

OIL PUMP

PRESSURE RELIEF VALVE REMOVAL

Separate the crankcase (Section 11).

Remove the attaching bolts and the pressure relief valve from the oil pump.

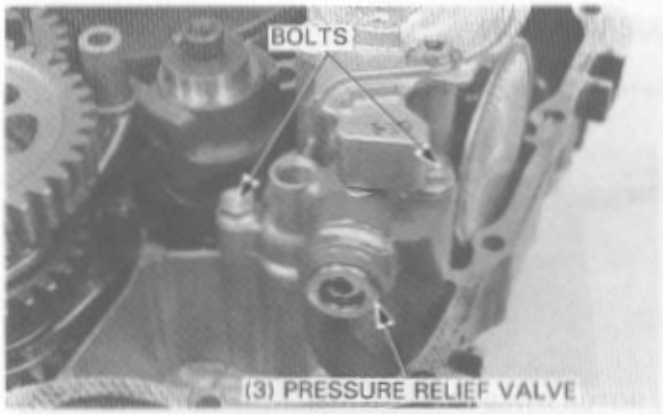

PRESSURE RELIEF VALVE DISASSEMBLY

Remove the snap ring using the snap ring pliers (07914—3230001) and disassemble the relief valve.

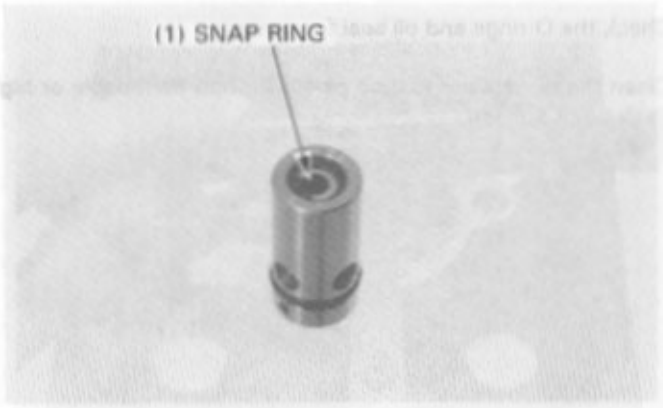

PRESSURE RELIEF VALVE INSPECTION

Check the spring, O-ring and valve for wear or damage.
Check the body for clogging or damage.

Clean all of the remaining parts.
Assemble the parts in the reverse order of disassembly.

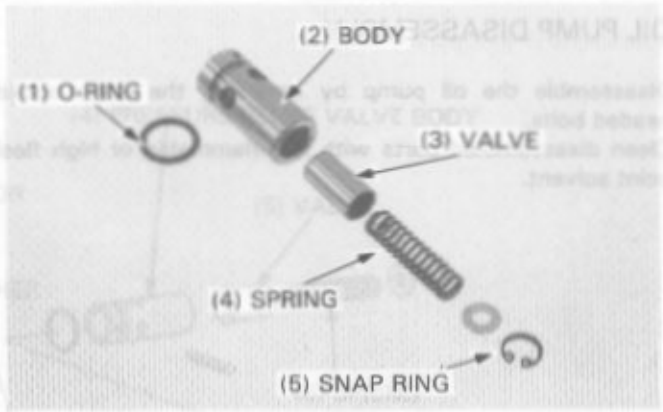

OIL PUMP REMOVAL

Temporarily loosen the three socket headed bolts when disassembling the oil pump.
Remove the oil pump by removing the three bolts.
Remove the dowel pins and O-rings.

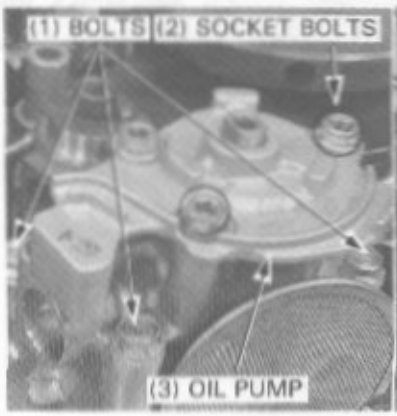

LUBRICATION

Remove the oil strainer and oil pipe from the oil pump.

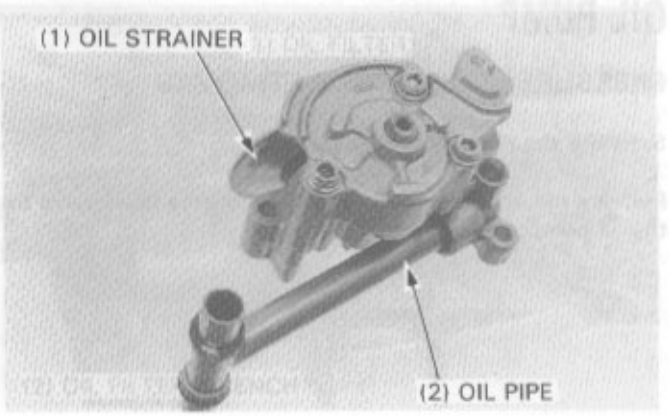

Check the O-rings and oil seal for damage.

Clean the oil strainer and oil pipe with non-flammable or high flash point solvent.

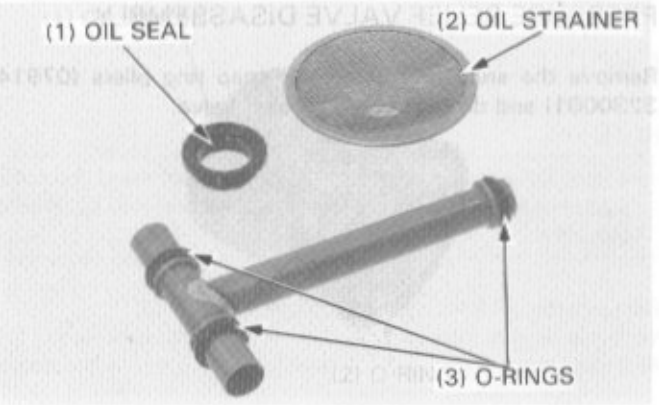

OIL PUMP DISASSEMBLY

Disassemble the oil pump by removing the three socket headed bolts.
Clean disassembled parts with non-flammable or high flash point solvent.

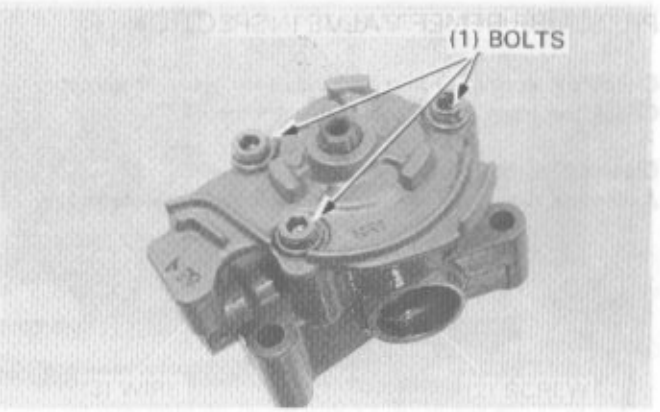

OIL PUMP INSPECTION

Install the outer rotor and inner rotor to the pump body.

Measure the pump body clearance.

SERVICE LIMIT: 0.35 mm (0.014 in)

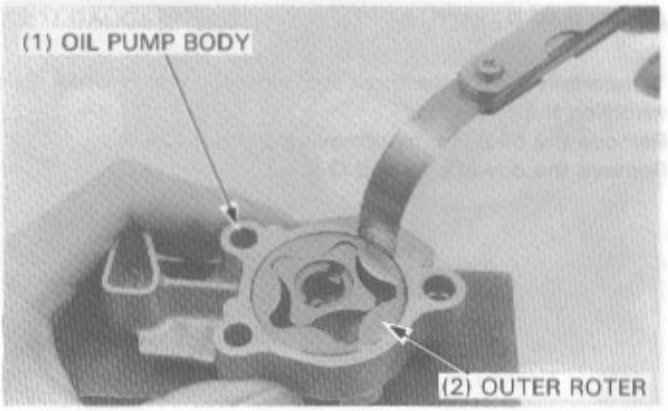

Temporarily install the pump shaft to the pump body.

Measure the tip clearance.

SERVICE LIMIT: 0.20 mm (0.008 in)

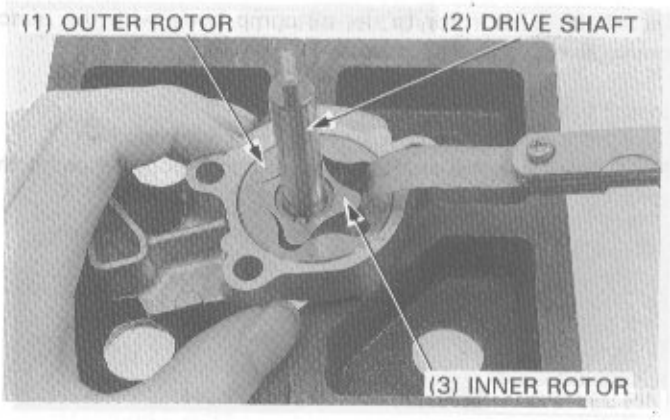

Remove the oil pump shaft from the oil pump.
Measure the pump end clearance.

SERVICE LIMIT: 0.10 mm (0.004 in)

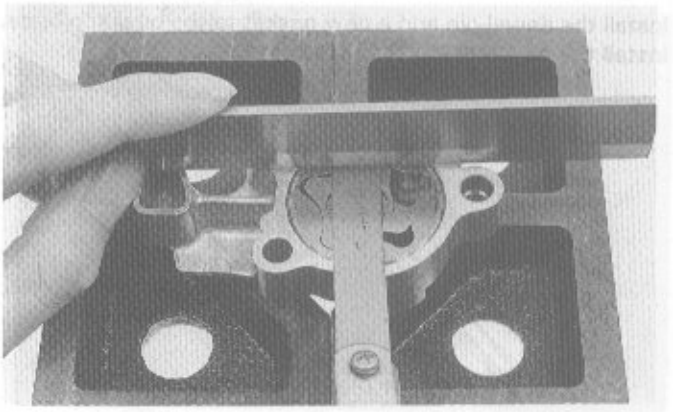

OIL PUMP ASSEMBLY

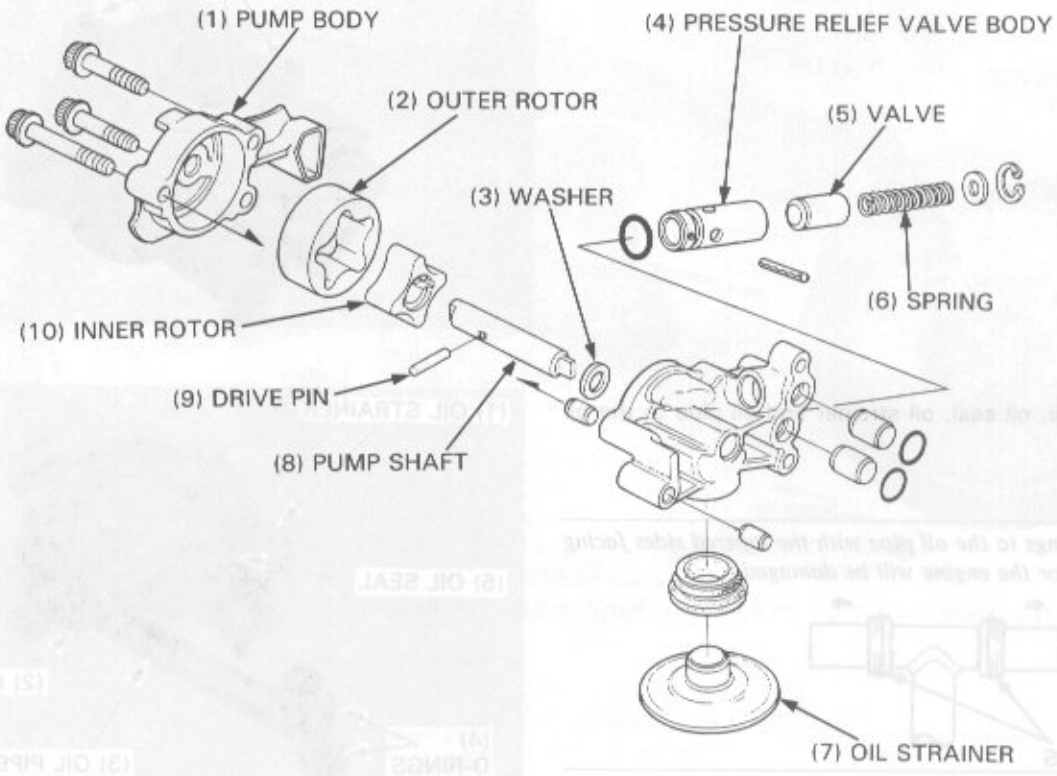

Install the outer rotor to the oil pump body with the punch mark facing the cover.

Install the inner rotor.
Install the drive pin and washer to the oil pump shaft.
Install the oil pump shaft to the oil pump body, aligning the drive pin with the groove of the inner rotor.

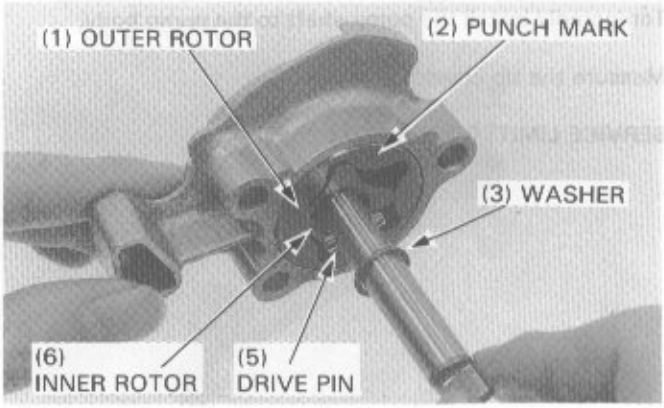

Install the dowel pin and a new gasket to the oil pump body.
Install the oil pump cover to the pump body.

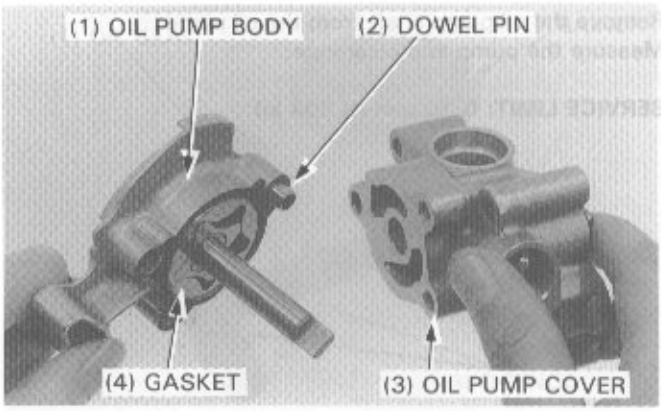

Tighten the oil pump bolts securely.

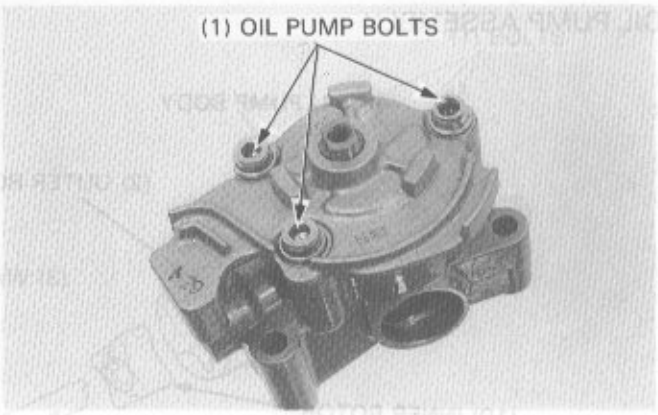

Install the O-rings, oil seal, oil strainer and oil pipe to the oil pump.

CAUTION

- *Install the O-rings to the oil pipe with the tapered sides facing out as shown, or the engine will be damaged.*

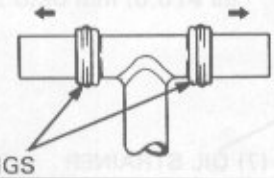

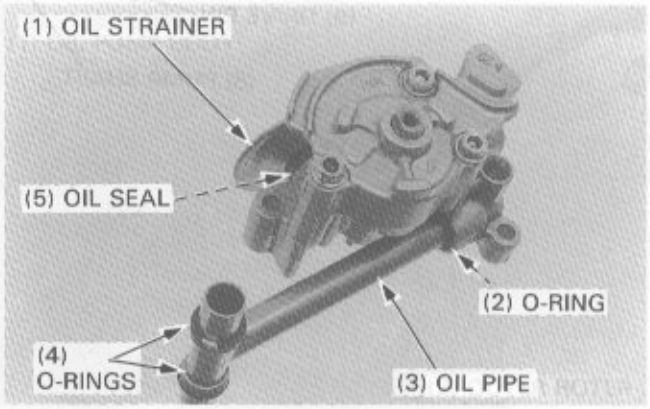

OIL PUMP INSTALLATION

Install the dowel pins and new O-rings.

Install the oil pump as an assembly.

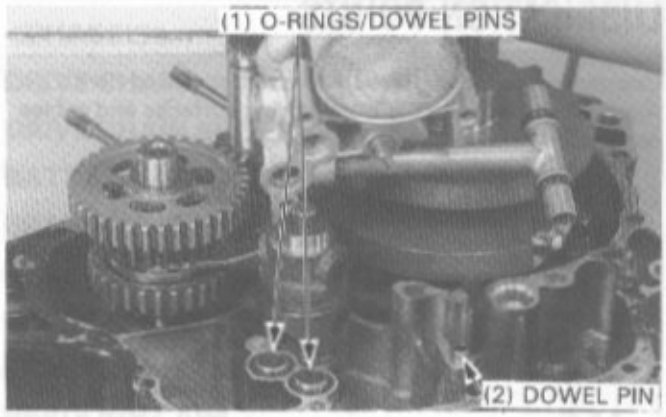

PRESSURE RELIEF VALVE INSTALLATION

Install the pressure relief valve to the oil pump.

Assemble the crankcase (Section 11).

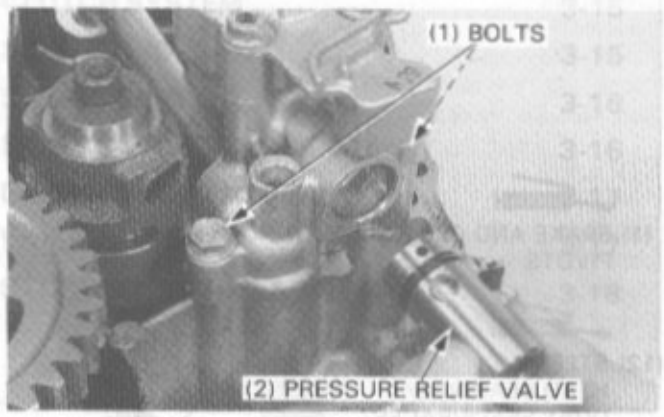

LUBRICATION POINTS

Use general purpose grease when not specified here.
Apply oil or grease to the other sliding surfaces and cables not shown here.

CONTROL CABLE LUBRICATION

Periodically disconnect the throttle and clutch cables at their upper ends. Clean the cable end mount in the throttle and clutch lever, then oil the cable ends and reinstall.
If a cable begins to bind, it must be replaced.

Apply a paste grease with 40% or more molybdenum dislufide to the SPECIAL LUBLICANT mark components.

NOTE

Some source of MoS_2 paste grease with 40% or more molybdenum are:

- Molykote® G-n Paste manufactured by Dow Corning, U.S.A.
- Honda Moly 45 (U.S.A. only)
- Rocol ASP manufactured by Rocol Limited, U.K.
- Rocol Paste manufactured by Sumico Lubricant, Japan.

Any other manufacture's paste grease equivalent to the above may also be used.

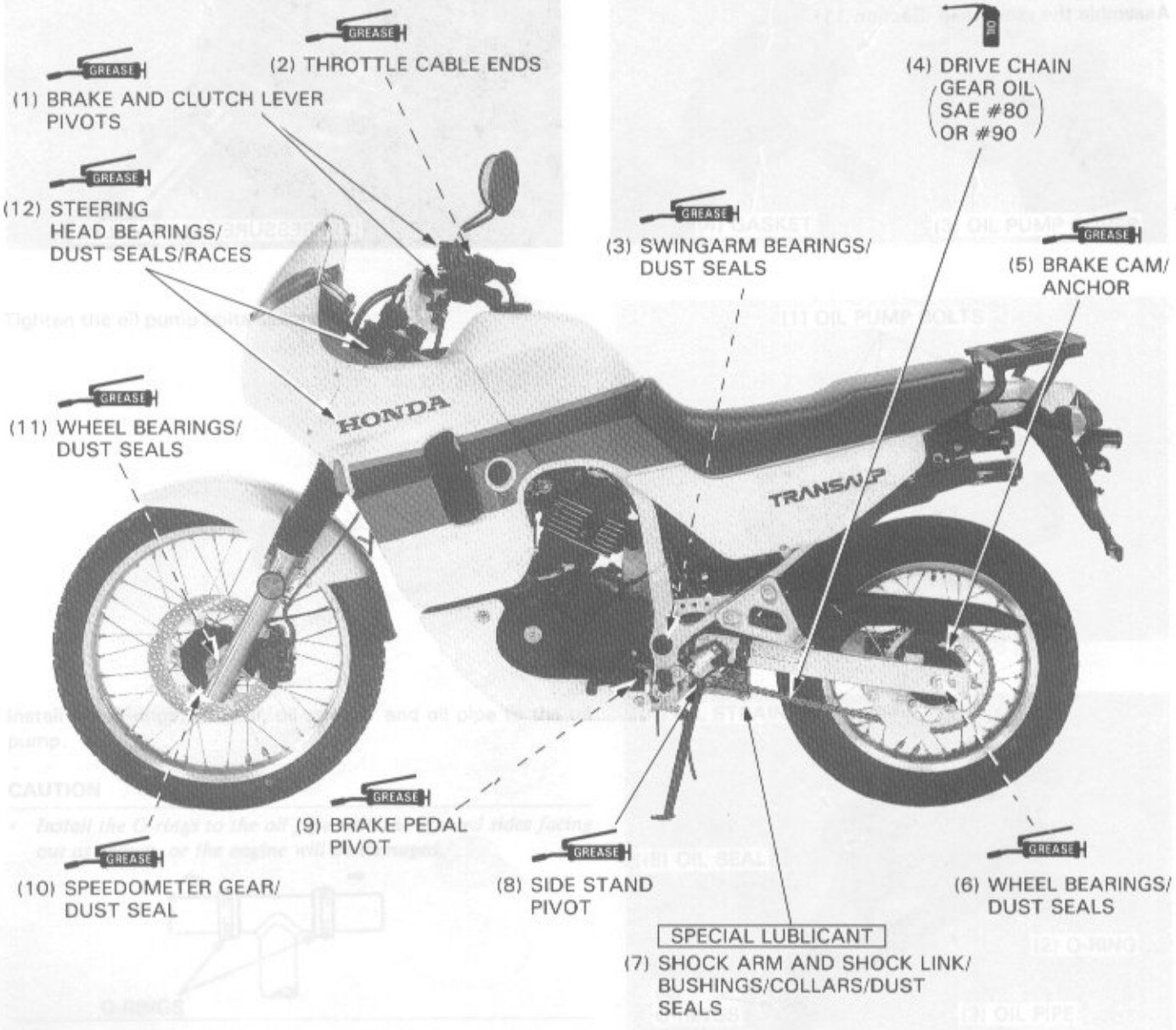

SERVICE INFORMATION	3-1	<CHASSIS>	
MAINTENANCE SCHEDULE	3-3	DRIVE CHAIN	3-11
<ENGINE>		DRIVE CHAIN SLIDER	3-12
FUEL LINE	3-4	BATTERY	3-12
FUEL STRAINER SCREEN	3-4	BRAKE FLUID	3-13
THROTTLE OPERATION	3-4	BRAKE SHOE/PAD WEAR	3-13
CARBURETOR CHOKE	3-5	BRAKE SYSTEM	3-13
AIR CLEANER	3-5	BRAKE LIGHT SWITCH	3-14
CRANKCASE BREATHER	3-6	HEADLIGHT AIM	3-14
SPARK PLUGS	3-6	CLUTCH SYSTEM	3-15
VALVE CLEARANCE	3-7	SIDE STAND	3-15
CARBURETOR SYNCHRONIZATION	3-8	SUSPENSION	3-16
CARBURETOR IDLE SPEED	3-9	SPARK ARRESTER (U.S.A. only)	3-16
RADIATOR COOLANT	3-9	NUTS, BOLTS, FASTENERS	3-17
COOLING SYSTEM	3-9	WHEELS/TIRES	3-17
CYLINDER COMPRESSION	3-10	STEERING HEAD BEARINGS	3-18
EVAPORATIVE EMISSION CONTROL SYSTEM (California model only)	3-10		

SERVICE INFORMATION

GENERAL

- Engine oil — See page 2-3
- Engine oil filter replacement — See page 2-4

SPECIFICATIONS

<ENGINE>

Spark plugs

	NGK	ND
Standard	DPR8EA-9	X24EPR-U9
For cold climate (below 5°C/41°F)	DPR7EA-9	X22EPR-U9
For extended high speed driving	DPR9EA-9	X27EPR-U9

Spark plug gap	0.8–0.9 mm (0.031–0.035 in)
Valve clearance IN (COLD)	0.15 mm (0.006 in)
Valve clearance EX (COLD)	0.20 mm (0.008 in)
Idle speed	1,300 ± 100 rpm
Cylinder compression	1,177 ± 98 kPa (12.0 ± 1.0 kg/cm², 171 ± 14 psi)
Throttle grip free play	2–6 mm (1/16–1/4 in)
Carburetor synchronization	Both carburetor within 40 mm (1.6 in) Hg of each other

<CHASSIS>

Rear brake free play	20–30 mm (3/4–1-1/8 in)
Clutch lever free play	10–20 mm (3/8–3/4 in)
Drive chain slack	35–45 mm (1-3/8–1-3/4 in)
Chain slider wear service limit	3 mm (1/8 in)
Chain slipper wear service limit	5 mm (3/16 in)

Tires

		Front	Rear
Tire size		90/90—21 54S	130/80—17 65S
Cold tire pressures	Up to 90 kg (200 lbs) load	29 psi (2.00 kg/cm², 200 kPa)	29 psi (2.00 kg/cm², 200 kPa)
	Up to vehicle capacity load	29 psi (2.00 kg/cm², 200 kPa)	29 psi (2.00 kg/cm², 200 kPa)
Minimum thread depth		1.5 mm (0.06 in)	2.0 mm (0.08 in)

TORQUE VALUES

Rear axle nut	95 N·m (9.5 kg-m, 69 ft-lb)
Fuel cup	4 N·m (0.4 kg-m, 2.9 ft-lb)
Valve adjusting screw lock nut	23 N·m (2.3 kg-m, 17 ft-lb)
Spark plug	14 N·m (1.4 kg-m, 10 ft-lb)
Spokes (front/rear)	3.8 N·m (0.38 kg-m, 2.7 ft-lb)
Timing hole cap	10 N·m (1.0 kg-m, 7 ft-lb)
Crankcase hole cap	15 N·m (1.5 kg-m, 11 ft-lb)
Side stand pivot nut	40 N·m (4.0 kg-m, 29 ft-lb)

TOOLS

Special

Valve clearance adjusting wrench	07908—KE90000 or valve adjust wrench 07908—KE90100
Vacuum gauge	07404—0030000 or M937B—021—XXXXX
Compression gauge	07305—0010000

Common

Wrench, 10 x 12 mm	07708—0030200
Spanner C, 5.8 x 6.1 mm	07701—0020300

} Equivalent commercially available in U.S.A.

MAINTENANCE SCHEDULE

Perform the PRE-RIDE INSPECTION in the Owner's Manual at each scheduled maintenance period.
I: Inspect and clean, Adjust, Lubricate, or Replace if necessary.
R: Replace C: Clean L: Lubricate

		ITEM / FREQUENCY	NOTE	ODOMETER READING (NOTE 1) x 1,000 mi	0.6	4	8	12	16	20	24	Refer to page
				x 100 km	10	64	128	192	256	320	384	
EMISSION RELATED ITEMS	*	FUEL LINE					I		I		I	3-4
	*	FUEL STRAINER SCREEN				C	C	C	C	C	C	3-4
	*	THROTTLE OPERATION					I		I		I	3-4
	*	CARBURETOR CHOKE					I		I		I	3-5
		AIR CLEANER	NOTE 2			C	C	R	C	C	R	3-5
		CRANKCASE BREATHER	NOTE 3			C	C	C	C	C	C	3-6
		SPARK PLUG				I	R	I	R	I	R	3-6
	*	VALVE CLEARANCE			I		I		I		I	3-7
		ENGINE OIL			R		R		R		R	2-3
		ENGINE OIL FILTER			R		R		R		R	2-4
	*	CARBURETOR SYNCHRONIZATION			I		I		I		I	3-8
	*	CARBURETOR-IDLE SPEED			I	I	I	I	I	I	I	3-9
		RADIATOR COOLANT	NOTE 7				I		I		R	3-9
	*	COOLING SYSTEM					I		I		I	3-9
	*	EVAPORATIVE EMISSION CONTROL SYSTEM	NOTE 4					I			I	3-10
NON-EMISSION RELATED ITEMS		DRIVE CHAIN	NOTE 5	EVERY 600 mi (1,000 km) I, L								3-11
		DRIVE CHAIN SLIDER				I	I	I	I	I	I	3-12
		BATTERY				I	I	I	I	I	I	3-12
		BRAKE FLUID	NOTE 7			I	I	R	I	I	R	3-13
		BRAKE SHOE/PAD WEAR				I	I	I	I	I	I	3-13
		BRAKE SYSTEM			I		I		I		I	3-13
	*	BRAKE LIGHT SWITCH					I		I		I	3-14
	*	HEADLIGHT AIM					I		I		I	3-14
		CLUTCH SYSTEM			I	I	I	I	I	I	I	3-15
		SIDE STAND					I		I		I	3-15
	*	SUSPENSION					I		I		I	3-16
	*	SPARK ARRESTER	NOTE 6			C	C	C	C	C	C	3-16
	*	NUTS, BOLTS, FASTENERS	NOTE 5		I		I		I		I	3-17
	**	WHEELS/TIRES	NOTE 5		I	I	I	I	I	I	I	3-17
	**	STEERING HEAD BEARINGS			I		I		I		I	3-18

* Should be serviced by an authorized Honda dealer, unless the owner has proper tools and service data and is mechanically qualified.

** In the interest of safety, we recommend these items be serviced only by an authorized Honda dealer.

NOTES: 1. At higher odometer readings, repeat at the frequency interval established here.
2. Service more frequently when riding in unusually wet or dusty areas.
3. Service more frequently when riding in rain or at full throttle.
4. California type only.
5. Service more frequently when riding OFF-ROAD.
6. U.S.A. only.
7. Replace every 2 years, or at indicated odometer interval, whichever comes first. Replacement requires mechanical skill.

FUEL LINE

Check the fuel line and vacuum line, and replace any parts which show deterioration, damage or leakage.

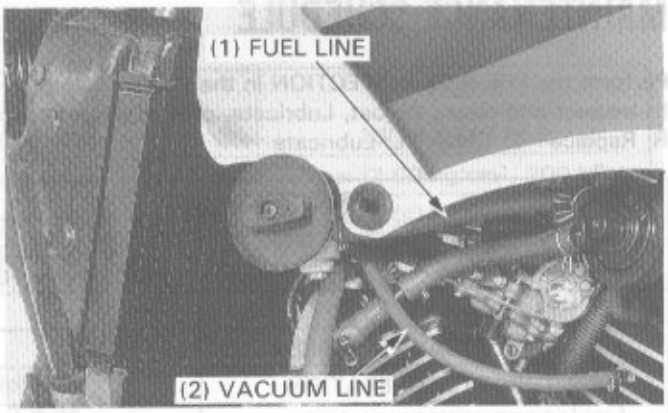

FUEL STRAINER SCREEN

Turn the fuel valve OFF.
Remove the fuel cup, O-ring and strainer screen, and drain the gasoline into a suitable container.

⚠ WARNING

- ***Gasoline is extremely flammable and is explosive under certain conditions.***
- ***Do not smoke or allow flames or sparks near the equipment while draining fuel.***

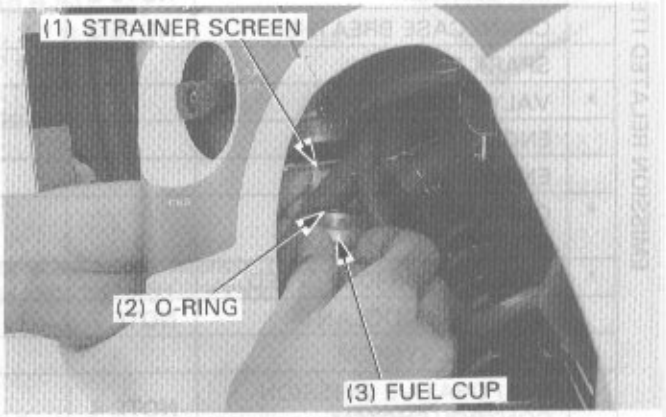

Wash the fuel cup and strainer screen in clean non-flammable or high flash point solvent.
Reinstall the strainer screen.
Reinstall the fuel cup, making sure a new O-ring is in place.
Finger-tighten the cup, then torque it.

TORQUE: 4 N·m (0.4 kg-m, 2.9 ft-lb)

After installing, turn the fuel valve ON and check that there are no fuel leaks.

THROTTLE OPERATION

Check for smooth throttle grip full opening and automatic full closing in all steering positions.
Check the throttle cables and replace them if they are deteriorated, kinked or damaged.

Lubricate the throttle cables, if throttle operation is not smooth.

Measure throttle grip free play at the throttle grip flange.

FREE PLAY: 2—6 mm (1/16—1/4 in)

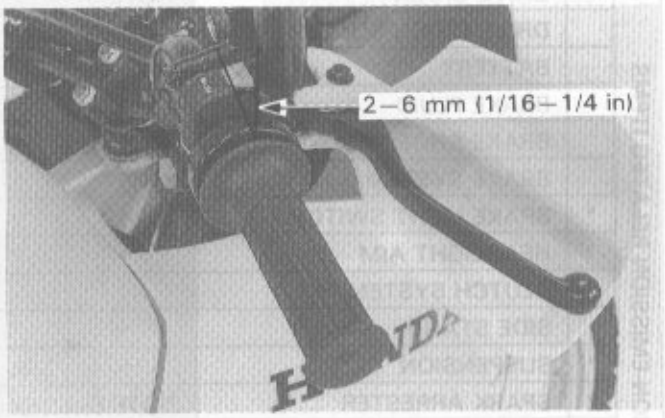

Minor adjustments are made with the upper throttle cable adjuster.

Adjust the free play by loosening the lock nut and turn the adjuster.
Tighten the lock nut.

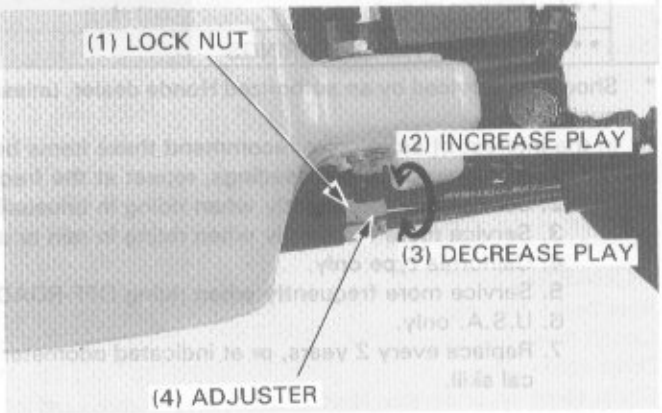

Major adjustments are made with the lower adjuster.

Adjust the free play by loosening the lock nut and turning the adjusting nut. Tighten the lock nut.

Recheck throttle operation. Replace any damaged parts, if necessary.

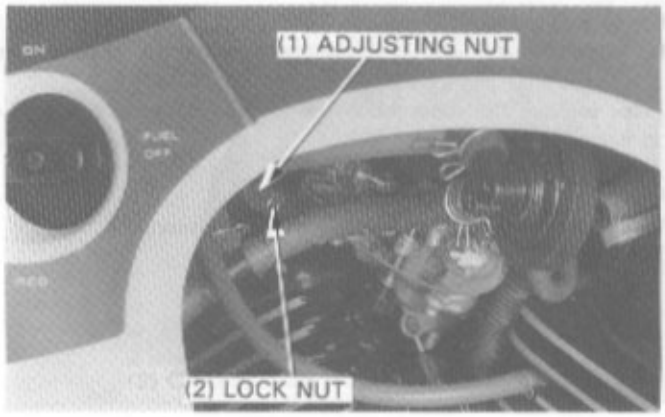

CARBURETOR CHOKE

Check that the choke lever moves smoothly.
Lubricate the choke cable, if the operation is not smooth.

Loosen the choke valve nut and remove the choke valve from the carburetor.
Pull the choke lever on the handlebars all the way back to the fully ON position and check for smooth operation of the choke lever.
There should be no free play.

Check the valve seat on the choke valve for damage. Reinstall the choke vavle in the reverse order of removal.

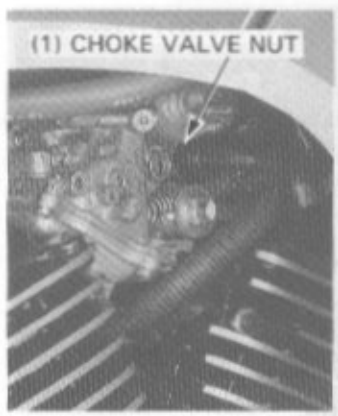

AIR CLEANER

Remove the left side cover.
Remove the air cleaner cover screws and element cover.

Remove the element.
Replace the element in accordance with the maintenance schedule.
Also, replace the element any time it is excessively dirty or damaged.

Install the air cleaner element.
Install the parts in the reverse order of removal.

(1) AIR CLEANER ELEMENT

CRANKCASE BREATHER

Release the drain tube of the air cleaner case to empty any deposits.

If any deposits are visible in the transparent parts of the drain tube, remove the plug from the air cleaner case drain tubes to empty them.
Install the drain plug.

NOTE

- Service more frequently when ridden in rain or at full throttle or if the deposit level can be seen in the transparent parts of the drain tube.

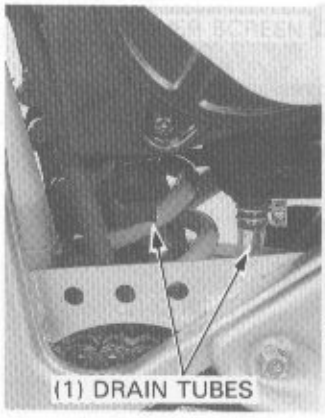
(1) DRAIN TUBES

(2) DRAIN PLUG

SPARK PLUGS

Disconnect the spark plug cap and remove the spark plug.

Visually inspect the spark plug. Discard it if the insulator is cracked or chipped.

Measure the spark plug gap with a wire-type feeler gauge. Adjust the gap by bending the side electrode carefully.

SPARK PLUG GAP: 0.8—0.9 mm (0.031—0.035 in)

RECOMMENDED SPARK PLUGS:

	NGK	ND
Standard	DPR8EA-9	X24EPR-U9
For cold climate (below 5°C/41°F)	DPR7EA-9	X22EPR-U9
For extended high speed driving	DPR9EA-9	X27EPR-U9

Make sure the sealing washer is in good condition.

Install the spark plug, tighten it by hand, then use a spark plug wrench for the final tightening.

TORQUE: 14 N·m (1.4 kg-m, 10 ft-lb)

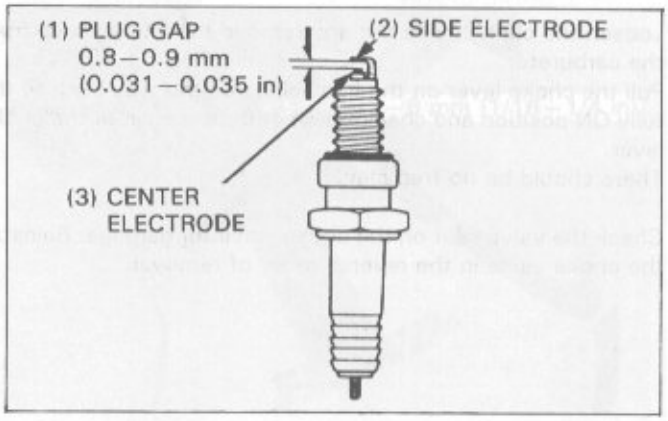

VALVE CLEARANCE

NOTE

- Inspect and adjust valve clearance while the engine is cold (below 35°C/95°F).

Remove the fuel tank (page 4-3).
Remove the radiator mounting bolts and the radiator (page 5-6).

Remove the crankcase hole cap and timing hole cap.
Remove the valve adjusting covers from the cylinder head covers.

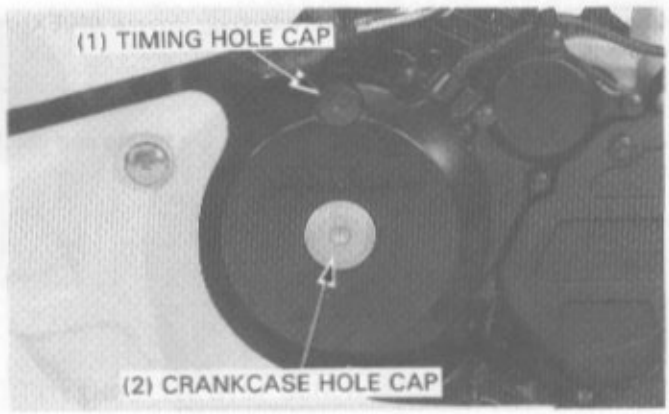

For the inspection and adjustment of the front cylinder head valve clearance, rotate the flywheel counterclockwise to align the "FT" mark with the index notch on the left crankcase cover.
Make sure the piston is at TDC (Top Dead Center) on the compression stroke.

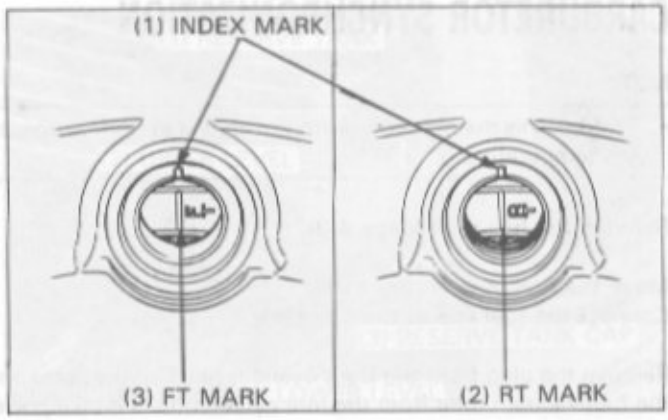

FRONT CYLINDER HEAD

Inspect the clearance of all three valves by inserting a feeler gauge between the adjusting screw and the valve.

VALVE CLEARANCE:
Intake: 0.15 mm (0.006 in)
Exhaust: 0.20 mm (0.008 in)

Adjust by loosening the lock nut and turning the adjusting screw until there is a slight drag on the feeler gauge.

Hold the adjusting screw and tighten the lock nut.

TORQUE: 23 N·m (2.3 kg-m, 17 ft-lb)

TOOLS:

Valve clearance adjusting wrench	**07908–KE90000 or valve adjust wrench 07908–KE90100**
Wrench, 10 x 12 mm	**07708–0030200**

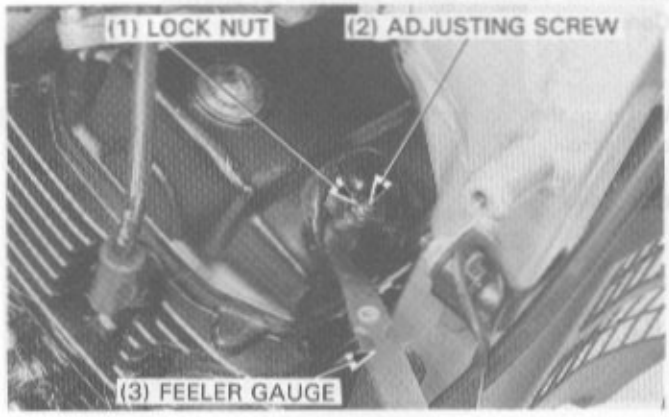

Apply oil to the nut and screw thread.

REAR CYLINDER HEAD

NOTE

- After the inspection and adjustment of the front cylinder head valve clearance, rotate the flywheel counterclockwise to align the "RT" mark with the index notch on the left crankcase cover to inpsect and adjust the rear cylinder valve clearance. Make sure the piston is at TDC (Top Dead Center) on the compression stroke.

Rear cylinder valve inspection and adjustment are done in the same way as front cylinder valve clearance.

Check the O-rings of the valve adjusting covers (IN/EX) for damage and replace if necessary.
Install the front and rear valve adjusting covers.

Apply MoS_2 paste grease (page 2-10) to the timing and crankcase hole caps. Install and tighten them.

TORQUE:
Timing hole cap:
10 N·m (1.0 kg-m, 7 ft-lb)
Crankshaft hole cap:
15 N·m (1.5 kg-m, 11 ft-lb)

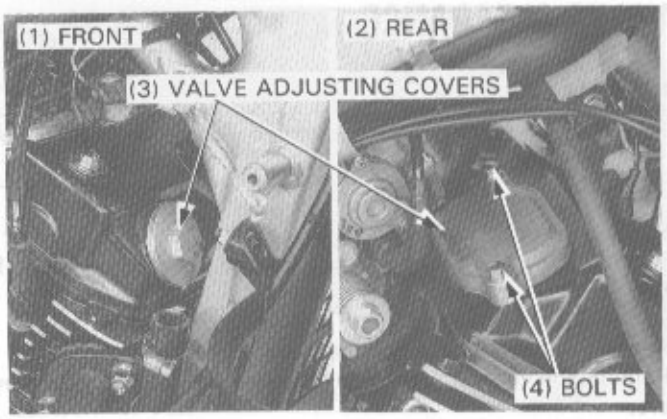

CARBURETOR SYNCHRONIZATION

NOTE

- Perform this maintenance with the engine at normal operating temperature.

Remove the fuel tank (page 4-3).

Move the fuel tank on the frame.
Connect the fuel line to the fuel tank.

Remove the plug from the front cylinder head intake ports and the fuel vacuum tube from the rear cylinder head intake ports.

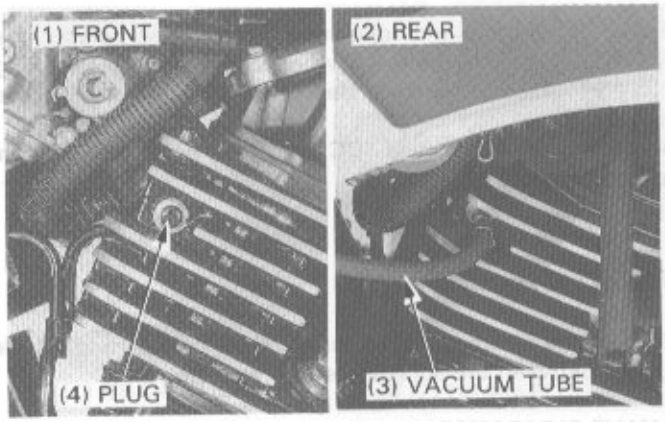

Install the vacuum gauge adaptors as shown.
Connect the vacuum gauges.

Warm up the engine and adjust the idle speed with the throttle stop screw.

IDLE SPEED: 1,300 ±100 rpm

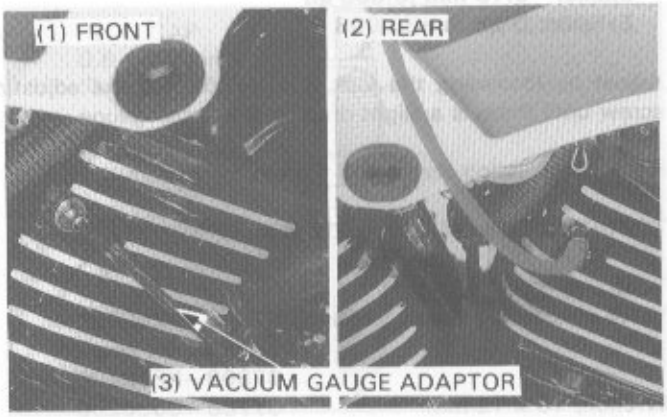

Check that the difference in vacuum readings between the cylinders is 40 mm Hg or less.
Synchronize to the specification by turning the synchronization adjusting screw.
Recheck the idle speed and synchronization.
Disconnect the gauge adaptors and install the plug and vacuum tube.

TOOL:
Vacuum gauge — **07404–0030000 or vacuum gauge set M937B–021–XXXXX**

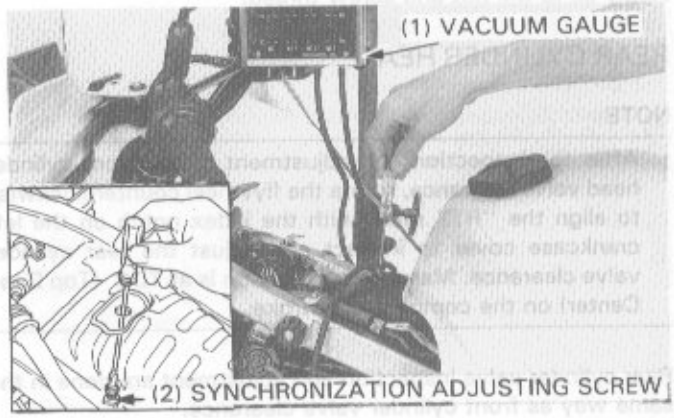

CARBURETOR IDLE SPEED

NOTE

- Inspect and adjust idle speed after all other engine adjustments are within specifications.
- The engine must be warm for accurate adjustment. Ten minutes of stop-and-go riding is sufficient.

Warm up the engine, shift to NEUTRAL, and place the motorcycle on its side stand.
Turn the throttle stop screw as required to obtain the specified idle speed.

IDLE SPEED: 1,300 ±100 rpm

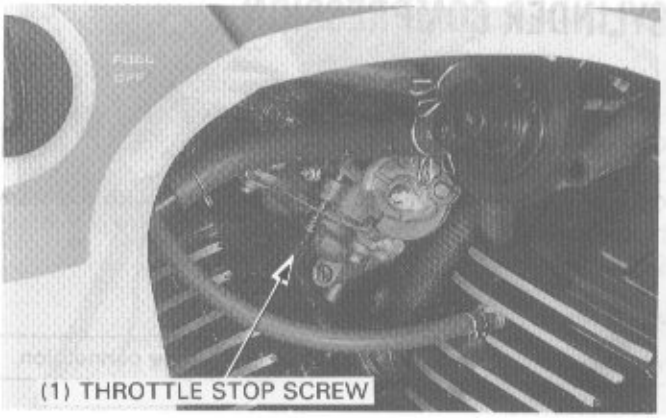

RADIATOR COOLANT

Remove the left side cover (page 12-4).
Check the coolant level of the reserve tank with the engine running at normal operating temperature.
The level should be between the "UPPER" and "LOWER" level lines.
If necessary, remove the reserve tank cap and fill the tank up to the UPPER level line with 50/50 mixture of distilled water and antifreeze.
Reinstall the cap and left side cover.

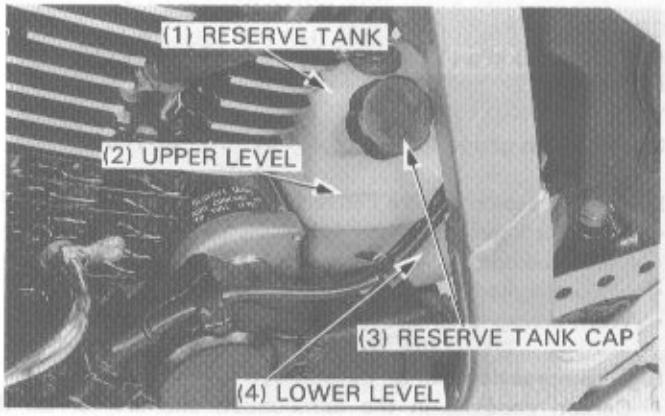

COOLING SYSTEM

Check the radiator cores for clogging and radiator fins for bending.

Straighten bent fins and collapsed core tubes.
Remove insects, mud or any obstruction with compressed air or low-pressure water.

Replace the radiator if the air flow is restricted over more than 20% of the radiating surface.

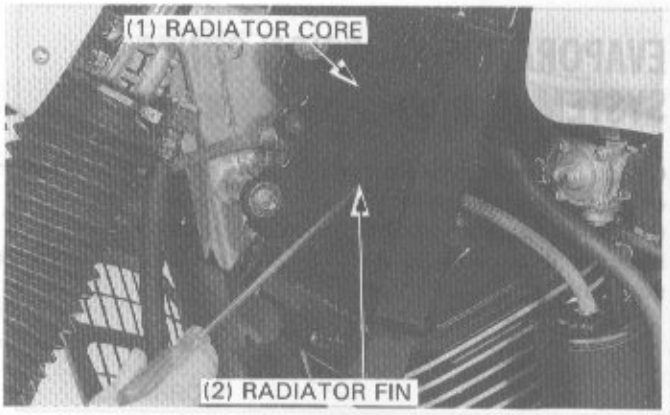

Inspect the water hoses for cracks or deterioration, and replace if necessary.
Check the all hose clamps to be secure.

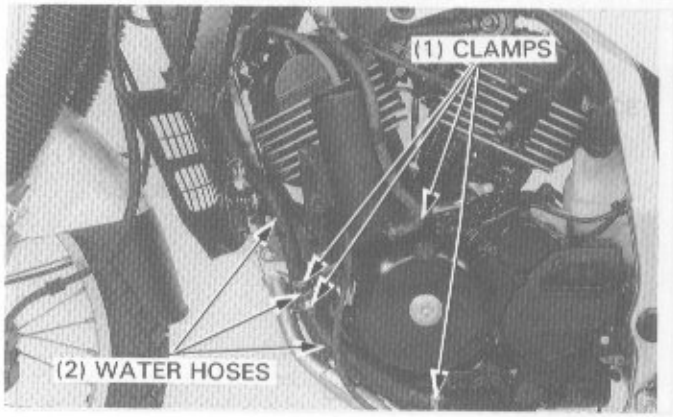

CYLINDER COMPRESSION

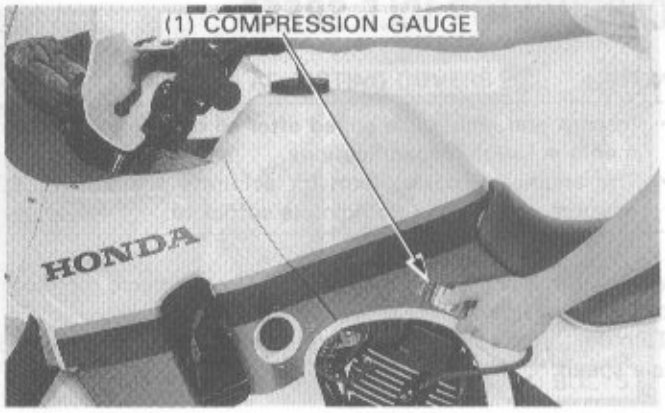

Warm up the engine.
Stop the engine and remove the spark plug.
Connect a compression gauge.
Turn the engine stop switch OFF.
Open the throttle grip fully. Crank the engine with the starter motor until the gauge stops rising.
Check the gauge reading.

NOTE

- Check the there is no leakage at the gauge connection.

COMPRESSION:
1177 ± 98 kPa (12.0 ± 1.0 kg/cm², 171 ± 14 psi)

TOOL:
Compression gauge **07305—0010000**

Low compression can be caused by:
- Improper valve clearance adjustment
- Valve leakage
- Leaking cylinder head gasket
- Worn piston rings or cylinder

High compression can be caused by:
- Carbon deposits in the combustion chamber or on the piston head.

EVAPORATIVE EMISSION CONTROL SYSTEM (California model only)

Check the system hoses for damage, deterioration, kinking clogging or loose connections.
Check the charcoal canister for cracks or damage.
Refer to the vacuum hose routing diagram label for hose connections.

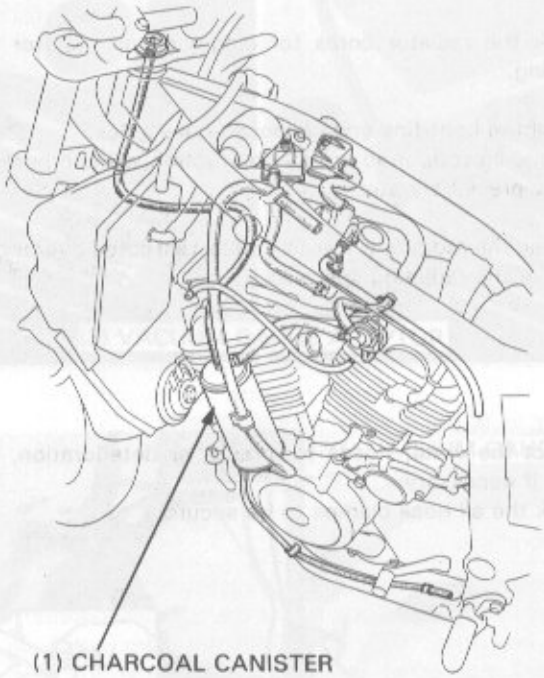

DRIVE CHAIN

DRIVE CHAIN SLACK INSPECTION

⚠ WARNING

- *Never inspect or adjust the drive chain while the engine is running.*

Turn the ignition switch off, place the motorcycle on its side stand and shift the transmission into neutral. Check slack in the drive chain lower run midway between the sprockets.

SLACK: 35–45 mm (1-3/8–1-3/4 in)

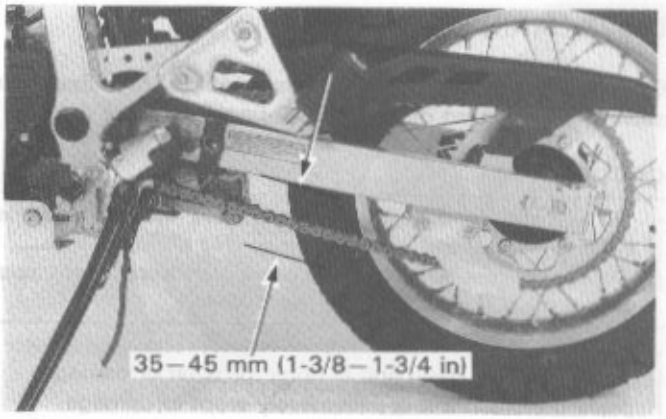

DRIVE CHAIN ADJUSTMENT

Loosen the axle nut.
Loosen both lock nuts and turn both adjusting nuts as necessary.

CAUTION

- *Be sure the same index mark on the adjuster are aligned with the rear edge of the swing arm hole on both side.*

Tighten both lock nuts.
Tighten the rear axle nut.

TORQUE: 95 N·m (9.5 kg-m, 69 ft-lb)

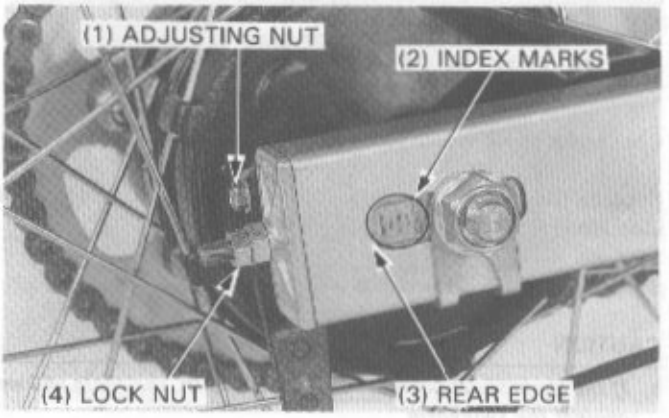

Check the chain wear label. If the red zone on the label aligns with the arrow of the chain adjuster after the chain has been adjusted, the chain must be replaced.

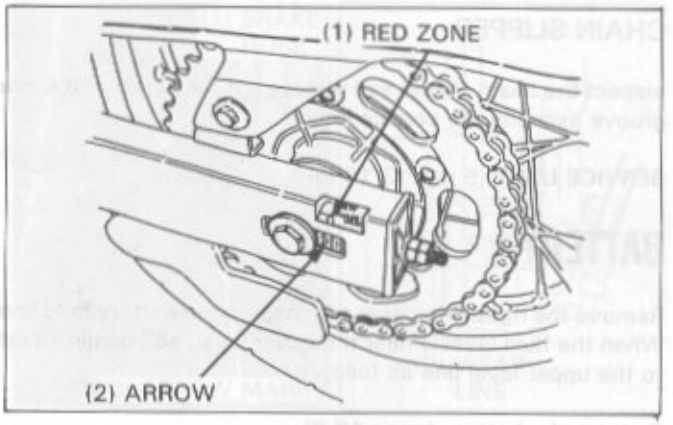

DRIVE AND DRIVEN SPROCKET

Inspect the sprocket teeth for excessive wear or damage. Replace if necessary.

CAUTION

- *Never install a new drive cahin on worn sprockets or a worn chain on new sprockets. Both chain and sprockets must be in good condition, or the new replacement parts will wear rapidly.*

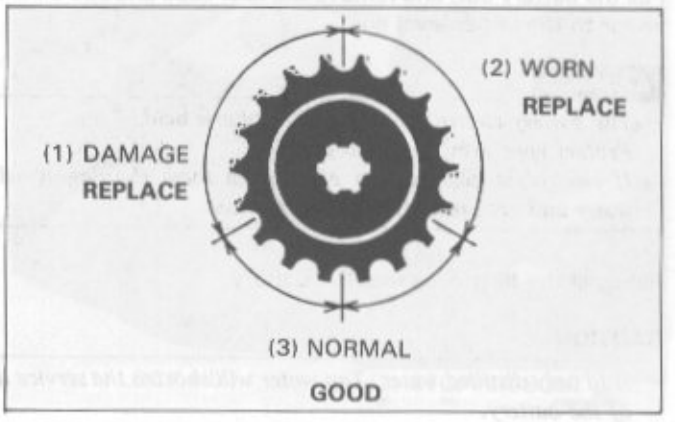

DRIVE CHAIN INSPECTION

Clean the drive chain with a non-flammable or high flash point solvent that will not damage the O-rings and wipe dry.

CAUTION

- *Do not use steam cleaners high pressure washers or aerosol chain lubricants as these will damage the O-rings.*
- *Do not use commercial aerosol chain lubricants. They contain solvents which could damage the O-rings.*

Inspect the drive chain and O-rings for wear or damage. Replace the chain if it is excessively worn or damage.

Lubricate the drive chain with SAE #80 or #90 gear oil.

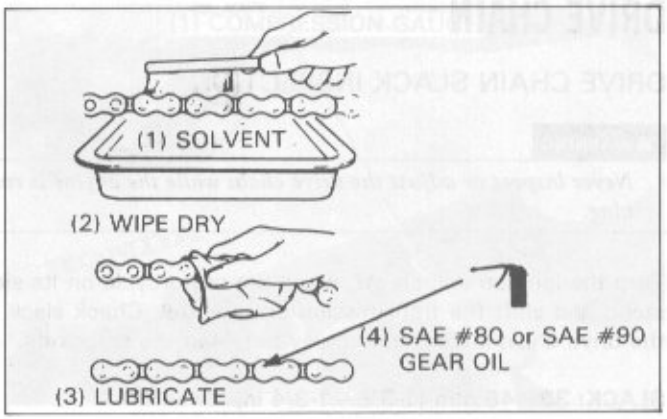

DRIVE CHAIN SLIDER

Check the chain slider for wear or damage.

Replace the drive chain slider if the thickness exceeds the service limit.

SERVICE LIMIT: 3 mm (1/8 in)

CAUTION

- *If the chain slider becomes excessively worn, the chain will wear against the swingarm.*

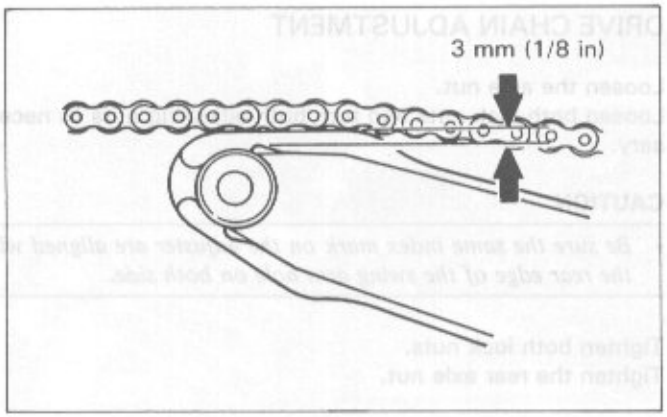

CHAIN SLIPPER

Inspect the chain slipper and replace it if the depth of the chain groove exceeds the service limit.

SERVICE LIMIT: 5 mm (3/16 in)

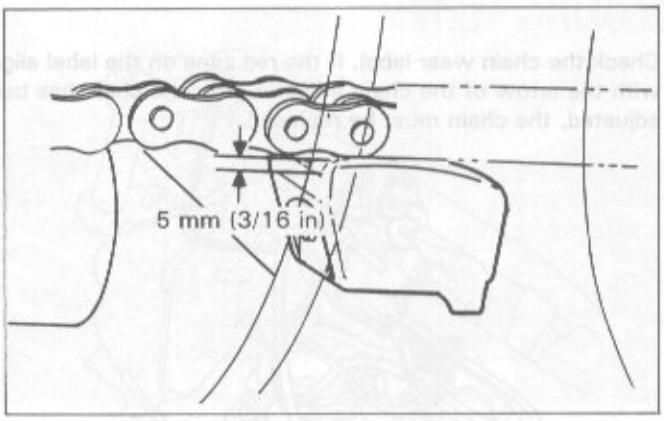

BATTERY

Remove the right side cover and inspect the battery fluid level. When the fluid level is near the lower level, add distilled water to the upper level line as follows:

Remove the battery (page 16-3).
Pull the battery out, and remove the filler caps and add distilled water to the upper level line.

⚠ WARNING

- ***The battery electrolyte contains sulphuric acid. Protect your eyes, skin and clothing. If electrolyte gets in your eyes, flush them thoroughly with water and get prompt medical attention.***

Reinstall the filler caps and the battery.

CAUTION

- *Add only distilled water. Tap water will shorten the service life of the battery.*

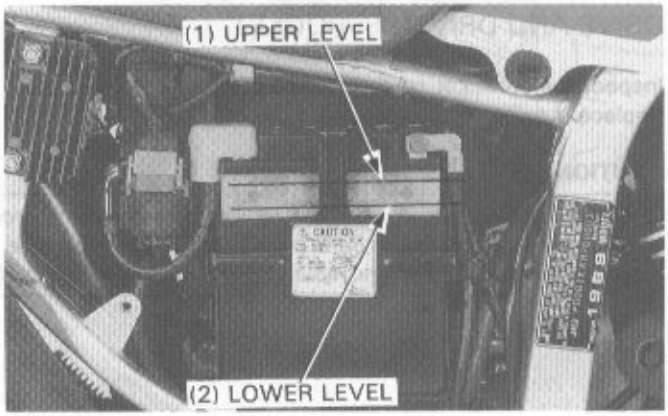

BRAKE FLUID

Check the front brake fluid reservoir level.
If the level nears the lower level mark, remove the cover and diaphragm. Fill the reservoir with DOT 3 or 4 brake fluid only.

Check the entire system for leaks, if the level is low.

CAUTION

- *Be careful not to let dust or water into the system when filling the reservoir.*
- *Avoid spilling brake fluid on painted surfaces or instruemnt lenses, as severe damage can result.*
- *Do not remove the cover until the handlebar has been turned so that the reservoir is level.*
- *Do not mix different types of fluid, as they are not compatible with each other.*

Refer to section 15 for brake bleeding procedures.

BRAKE SHOE/PAD WEAR

BRAKE SHOE INSPECTION

Replace the brake shoes if the arrow on the brake indicator plate aligns with the reference mark "△" on full application of the rear brake pedal.

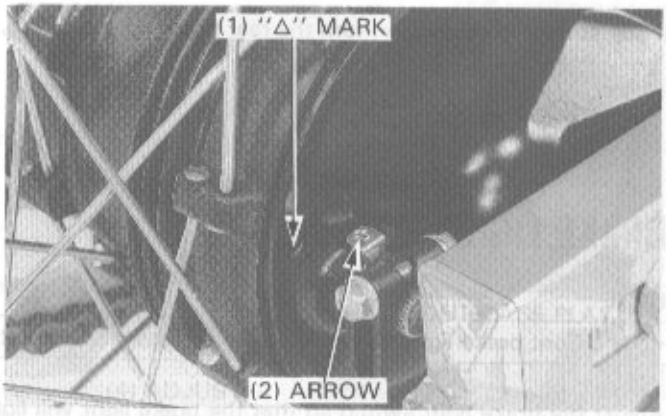

BRAKE PAD WEAR

Inspect the pads visually from the direction indicated by the arrow mark during all regular service intervals to determine pad wear.

If either pad wears to the wear lines, both pads must be replaced.

CAUTION

- *Always replace the brake pads in pairs to assure even disc pressure.*

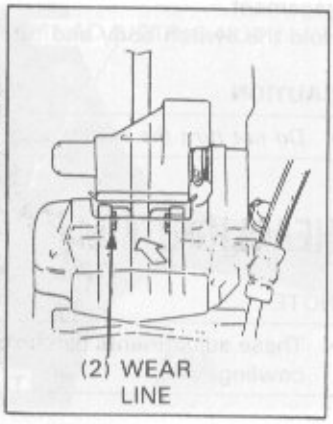

Make sure there are no fluid leaks.

Check the brake hose and fittings for deterioration or cracks.

BRAKE SYSTEM

BRAKE PEDAL HEIGHT

To adjust:
Loosen the lock nut and adjust the pedal height by turning the stopper bolt. Tighten the lock nut.
Adjust the brake pedal free play (page 3-14).

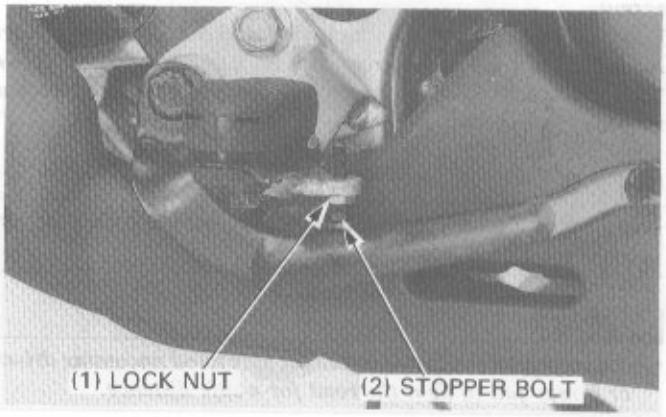

BRAKE PEDAL FREE PLAY

NOTE

- Adjust the brake pedal free play after adjusting the brake pedal height.

Measure the brake pedal free play.

FREE PLAY: 20—30 mm (3/4—1-1/8 in)

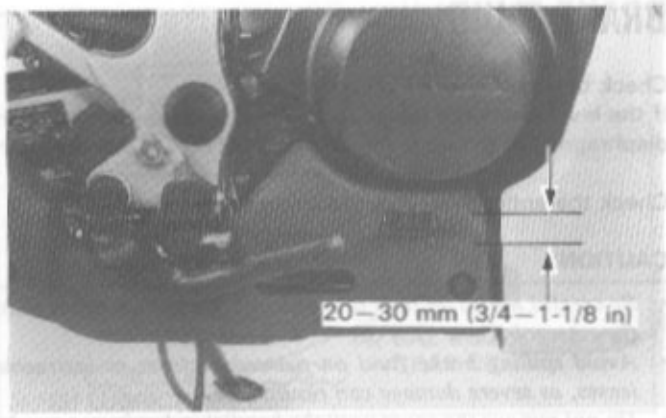

If adjustment is necessary, turn the rear brake adjusting nut.

BRAKE LIGHT SWITCH

NOTE

- The front brake light switch does not require adjustment.

Adjust the brake light switch so that the brake light will light when the brake pedal is depressed and the brake begins engagement.
Hold the switch body and turn the adjusting nut as required.

CAUTION

- *Do not turn the switch body. The wires may be damaged.*

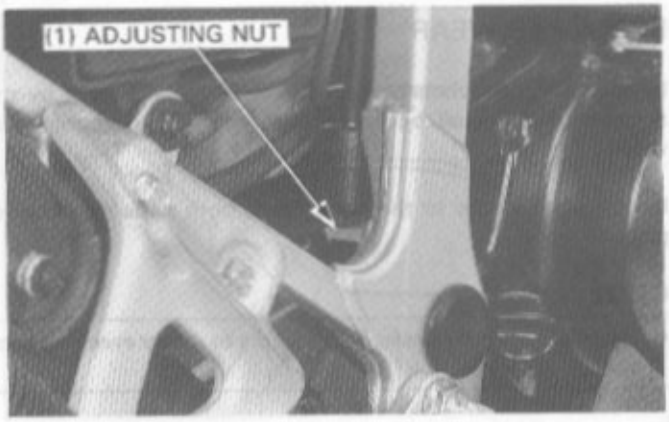

HEADLIGHT AIM

NOTE

- These adjustments can be done without removing the front cowling.

Adjust the headlight vertically by turning the vertical adjusting screw.
Turn the adjusting screw clockwise to direct the beam down.
Adjust horizontally by turning the horizontal adjusting screw.
Turn the adjusting screw clockwise to direct the beam toward the left side of the rider.

NOTE

- Adjust the headlight beam as specified by local laws and regulations.

⚠WARNING

- ***An improperly adjusted headlight may blind oncoming drivers, or it may fail to light the road for a safe distance.***

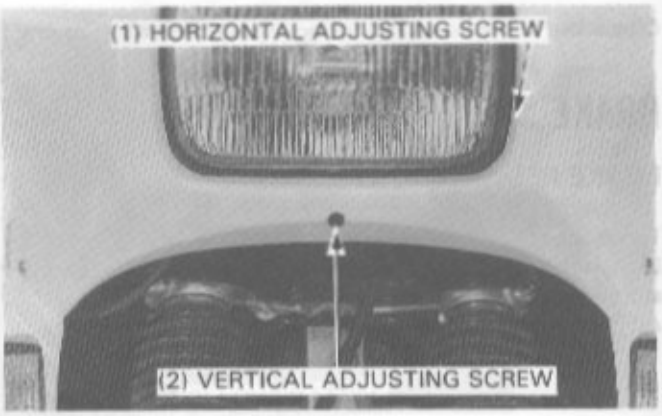

CLUTCH SYSTEM

Measure the clutch free play at the lever end.

FREE PLAY: 10—20 mm (3/8—3/4 in)

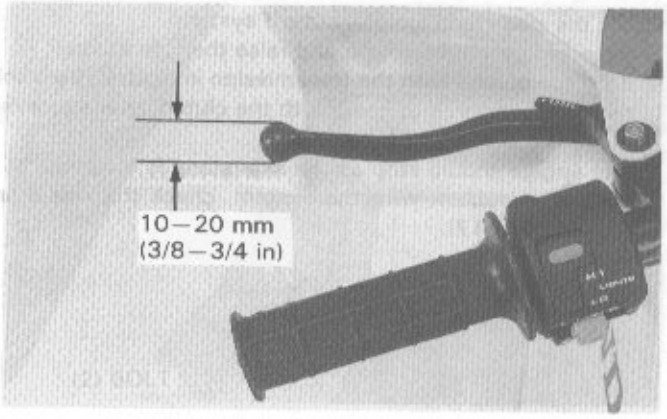

Minor adjustments are made with the upper adjuster.

Pull the lever cover back, loosen the lock nut and turn the adjuster to obtain the specified free play.

Tighten the lock nut and install the cover.

Check clutch operation.

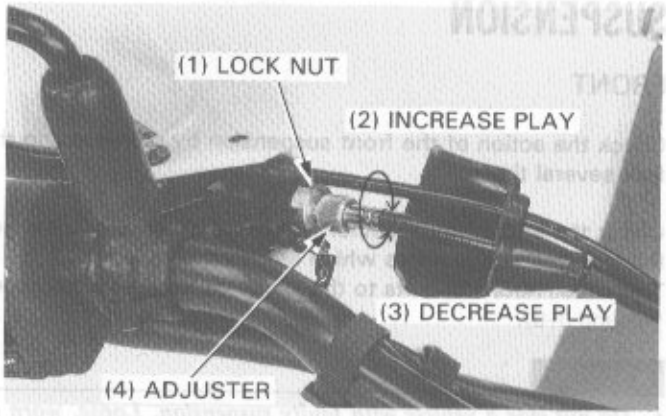

Major adjustments are made with the lower adjuster.
Loosen the lock nut and turn the adjusting nut to obtain the specified free play.

Tighten the lock nut and check the clutch operation.

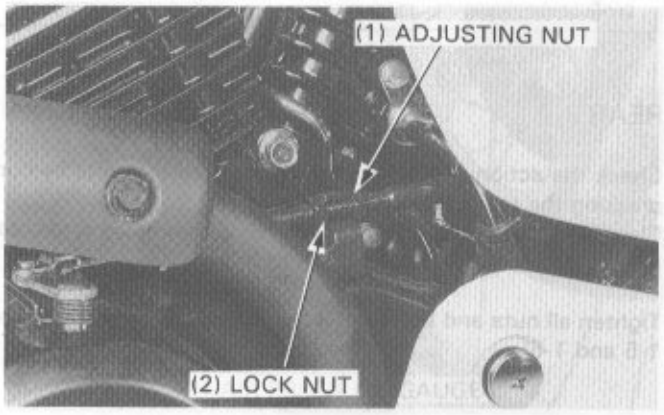

SIDE STAND

Check the spring for damage or loss of tension.
Check the side stand assembly for freedom of movement.
Lubricate the pivot bolt and the side stand pivot area if necessary.
Tighten the pivot nut.

TORQUE: 40 N·m (4.0 kg-m, 29 ft-lb)

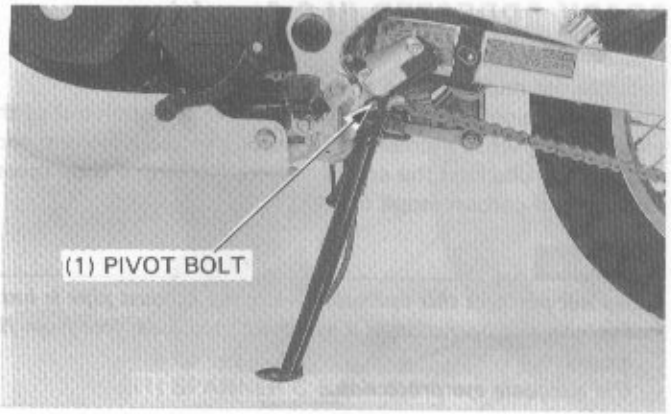

Check the side stand ignition cut-off system:
– Sit astride the motorcycle and raise the side stand.
– Start the engine with the transmission in neutral, then shift the transmission into gear, with the clutch lever squeezed.
– Move the side stand fully down.
– The engine should stop as the side stand is lowered.
If there is a problem with the system, check the side stand switch (section 17).

SUSPENSION

FRONT

Check the action of the front suspension by compressing the fork several times.

Check the entire fork assembly for signs of leaks or damage. Replace any components which are unrepairable.
Tighten all nuts and bolts to the specified torque value (pages 1-5 and 1-6).

⚠WARNING

- ***Do not ride a vehicle with faulty suspension. Loose, worn or damaged suspension parts may affect stability and rider control.***

REAR

Check the action of the rear suspension components by compressing the rear end several times.
Check the entire suspension assembly, to be sure it is securely mounted and not damaged or distorted.

Tighten all nuts and bolts to the specified torque value (pages 1-5 and 1-6).

SPARK ARRESTER (U.S.A. only)

Remove the muffler bolts and washers.
Start the engine and increase rpm's to blow carbon out of the exhaust pipe while momentarily creating exhaust system back pressure by blocking the end of the muffler with a shop towel. Repeat unitl carbon stops coming out.

⚠WARNING

- ***Do not perform this operation while the exhaust pipe is hot.***
- ***Perform this operation in a well ventilated area, free from fire hazard.***
- ***Use adequate eye protection.***

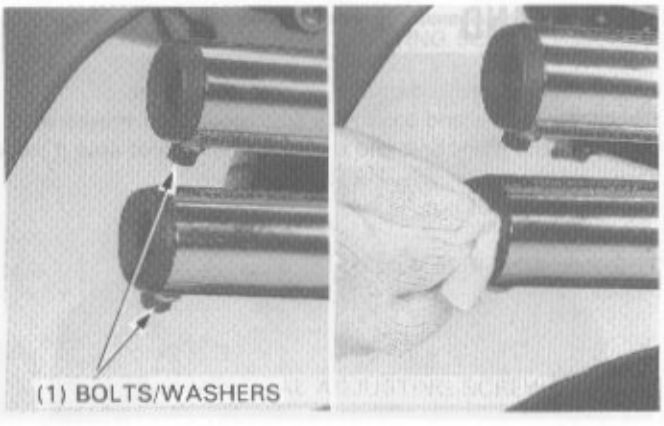
(1) BOLTS/WASHERS

After cleaning the spark arrester, install the washer and bolt.

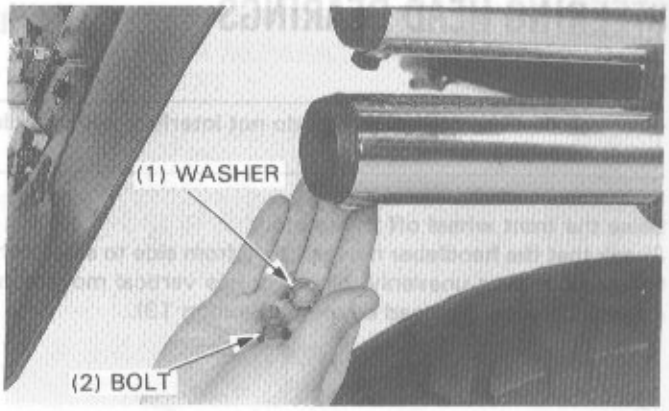

NUTS, BOLTS, FASTENERS

Tighten the bolts, nuts and fasteners at the intervals shown in the Maintenance Schedule (page 3-3).
Check that all chassis nuts and bolts are tightened to their specified torque values (pages 1-5 and 6).
Check all cotter pins and safety clips.

WHEELS/TIRES

TIRE PRESSURE

NOTE

- Tire pressure should be checked when the tires are COLD.

		Front	Rear
Tire size		90/90–21 54S	130/80–17 65S
Cold tire pressures psi (kg/cm², kPa)	Up 90 kg (200 lbs) load	29 (2.00, 200)	29 (2.00, 200)
	Up to vehicle capacity load	29 (2.00, 200)	29 (2.00, 200)

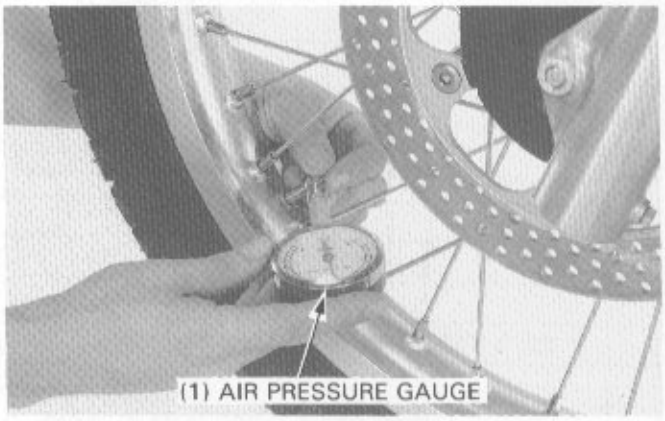

Check the tires for cuts, imbedded nails, or other sharp objects.
Check the front and rear wheels for trueness (Sections 13 and 14).
Measure the tread depth at the center of the tires.
Replace the tires if the tread depth reaches the following limits.

MINIMUM TREAD DEPTH:
Front: 1.5 mm (0.06 in)
Rear: 2.0 mm (0.08 in)

Tighten the wheel spokes periodically. More frequent inspection is necessary when riding off-road.

TORQUE (front/rear): 3.8 N·m (0.38 kg-m, 2.7 ft-lb)

TOOL:
SPANNER C 5.8 x 6.1 mm **07701–0020300**
Equivalent commercially available in U.S.A.

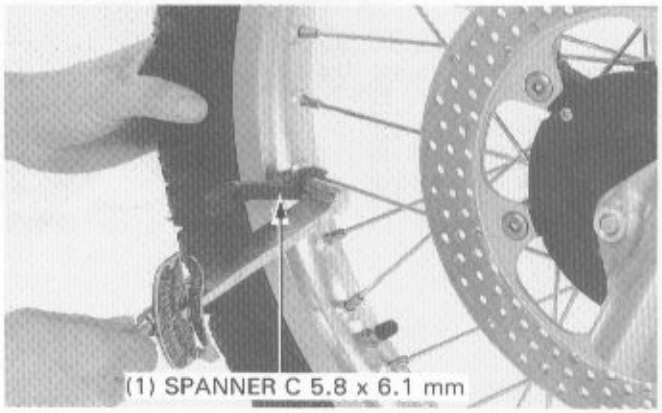

STEERING HEAD BEARINGS

NOTE

- Check that the control cables do not interfere with handlebar rotation.

Raise the front wheel off the ground.
Check that the handlebar moves freely from side to side. If the handlebar moves unevenly, binds, or has vertical movement, inspect the steering head bearings (Section 13).

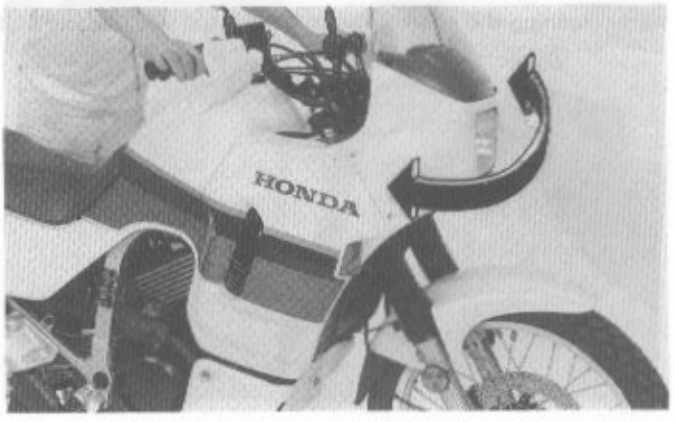

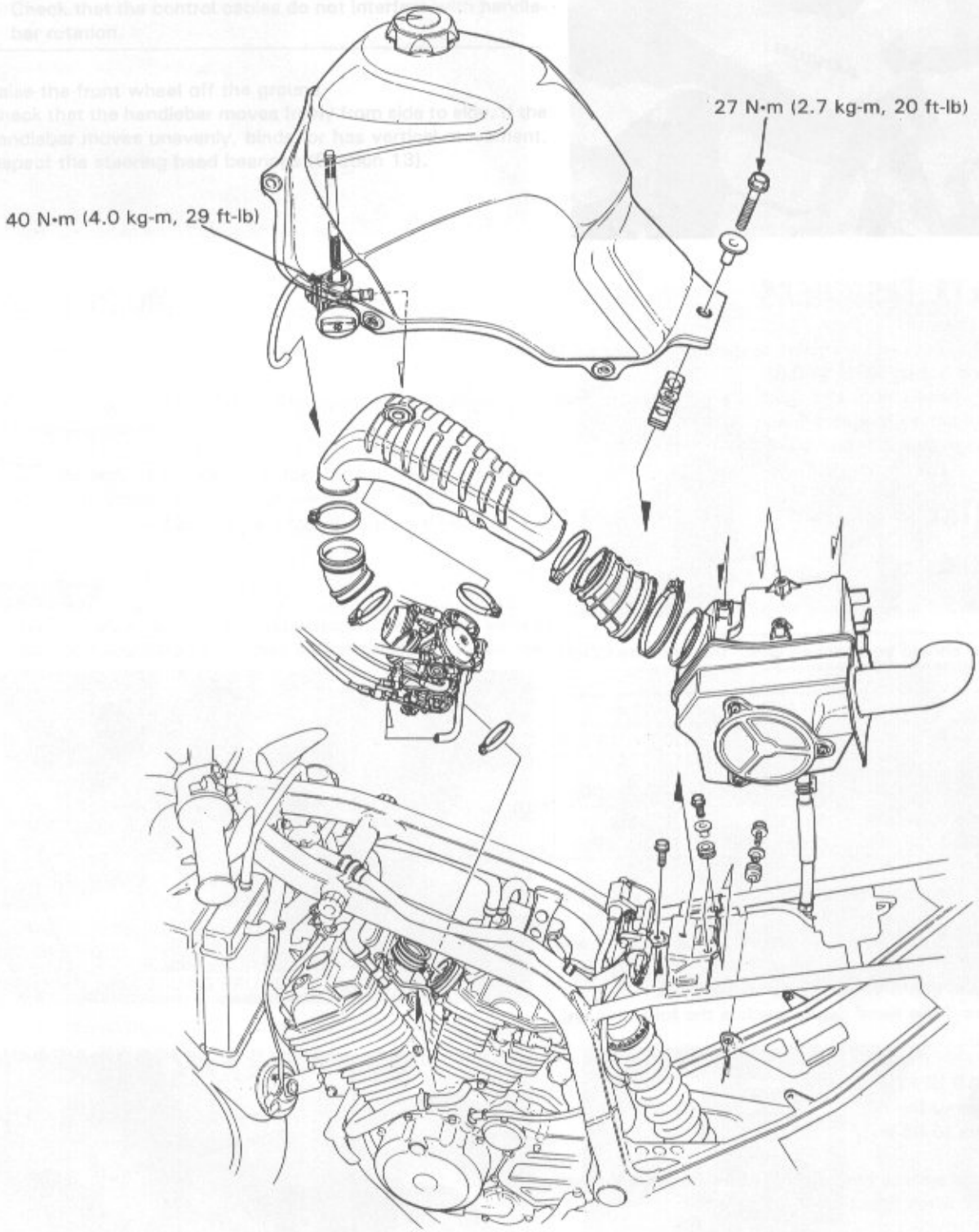
27 N·m (2.7 kg-m, 20 ft-lb)
40 N·m (4.0 kg-m, 29 ft-lb)

4. FUEL SYSTEM

SERVICE INFORMATION	4-1	CARBURETOR SEPARATION/ COMBINATION	4-14
TROUBLESHOOTING	4-2	CARBURETOR INSTALLATION	4-16
FUEL TANK	4-3	PILOT SCREW	4-17
FUEL VALVE	4-4	PILOT SCREW ADJUSTMENT	4-18
AIR CLEANER CASE	4-7	HIGH ALTITUDE ADJUSTMENT (U.S.A ONLY)	4-19
CARBURETOR REMOVAL	4-8	PURGE CONTROL VALVE INSPECTION (California model)	4-20
CARBURETOR DISASSEMBLY	4-8		
CARBURETOR ASSEMBLY	4-12		

SERVICE INFORMATION

⚠ WARNING

- *Gasoline is extremely flammable and is explosive under certain conditions. Work in a well ventilated area. Do not smoke or allow flames or sparks in the work area or where gasoline is stored.*

- Refer to Section 3 for carburetor synchronization, throttle cable and choke cable adjustments.
- When disassembling fuel system parts, note the locations of the O-rings; replace them with new ones on reassembly.
- The caburetor float chambers have drain screws that can be loosened to drain residual gasoline.

CAUTION

- *Do not bend or twist control cables. Damaged control cables will not operate smoothly and may stick or bind.*

NOTE

- If vehicle is to be stored for more than one month, drain the float bowls. Fuel left in the float bowls may cause clogged jets, resulting in hard starting or poor driveability.

SPECIFICATIONS

Fuel capacity	18 liters (4.8 US gal, 4.0 Imp gal)
Fuel reserve capacity	2.9 liters (0.77 US gal, 0.64 Imp gal)

< >: California model

Throttle valve dia.	ϕ34	
Indentification No.	VDFHA <VDFJA>	
Float level	7 mm (0.3 in)	
Main jet	FRONT #120	REAR #120
Slow jet	#38	
Idle speed	1,300 ± 100 rpm	
Throttle grip free play	2–6 mm (1/16–1/4 in)	
Pilot screw initial opening	2-1/2 turns out	
Vacuum difference between cylinders	40 mm (1.6 in) Hg max.	

TORQUE VALUES

Fuel tank mounting bolt	27 N·m (2.7 kg-m, 20 ft-lb)
Fuel valve lock nut	40 N·m (4.0 kg-m, 29 ft-lb)
Fuel cup	4 N·m (0.4 kg-m, 2.9 ft-lb)

TOOL

Common

Float level gauge	07401–0010000
Vacuum/Pressure pump	A937X-041-XXXXX or
Vacuum pump	ST-AH-260-MC7
Pressure pump	ST-AH-255-MC7 (U.S.A. only)

TROUBLESHOOTING

Engine cranks but won't start
- No fuel in tank
- No fuel to carburetor
  - Fuel filter/strainer clogged
  - Fuel line clogged
  - Float valve stuck
  - Float level misadjusted
  - Fuel tank breather tube clogged
  - Fuel auto valve malfunction
- Too much fuel getting to the engine
  - Air cleaner colgged
  - Flooded carburetor
- No spark at plug (ignition system malfunction)
- Intake air leak
- Fuel contaminated/deteriorated
- Slow circuit clogged

Lean mixture
- Fuel jet clogged
- Float valve faulty
- Float level too low
- Fuel line restricted
- Carburetor air vent tube clogged
- Intake air leak
- Fuel auto valve malfunction
- Vacuum piston faulty
- Throttle valve faulty

Rich mixture
- Choke valve in ON position
- Float valve faulty
- Float level too high
- Air jet clogged
- Air cleaner element contaminated
- Flooded carburetor

Engine stalls, hard to start, rough idling
- Fuel line restricted
- Ignition system malfunction
- Fuel mixture too lean/righ
- Fuel contaminated/deteriorated
- Intake air leak
- Idle speed misadjusted
- Fuel auto valve malfunction
- Pilot screw misadjusted
- Slow circuit clogged
- FLoat level misadjusted
- Fuel tank breather tube clogged
- Purge control valve faulty (California model only)
- Hoses of the emission control system faulty (California model only)

Afterburn when engine braking is used
- Air cut-off valve faulty
- Lean mixture in slow circuit
- Hoses of the emission control system faulty (California model only)

Backfiring or misfiring during acceleration
- Ignition system malfunction
- Fuel mixture too lean

Poor performance (driveability) and poor fuel economy
- Fuel system clogged
- Ignition system malfunction
- Damaged/misconnected emission control system hoses (California model only).

FUEL TANK

REMOVAL

⚠ WARNING

- ***Keep gasoline away from flames or sparks. Wipe up spilled gasoline at once.***

Remove the side covers (page 12-4) and side cowling (page 12-2).
Remove the two bolts and seat.
Turn the fuel valve OFF and disconnect the fuel tube and vacuum tubes.
Disconnect the fuel tank cap vent tube (California model only).
Remove the fuel tank mounting bolt and fuel tank.

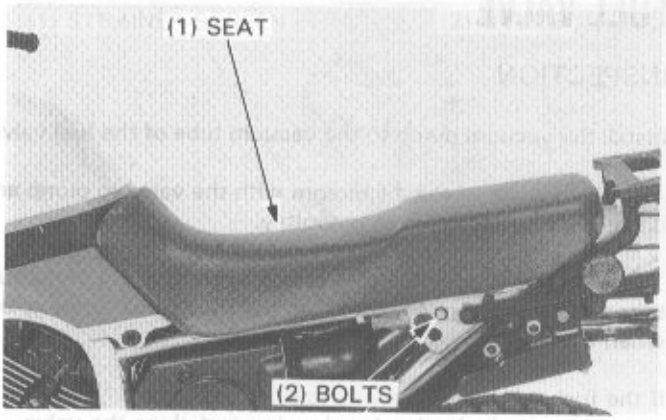

Check that fuel flows out of the fuel valve freely.
If flow is restricted, clean the fuel strainer screen (page 3-4).

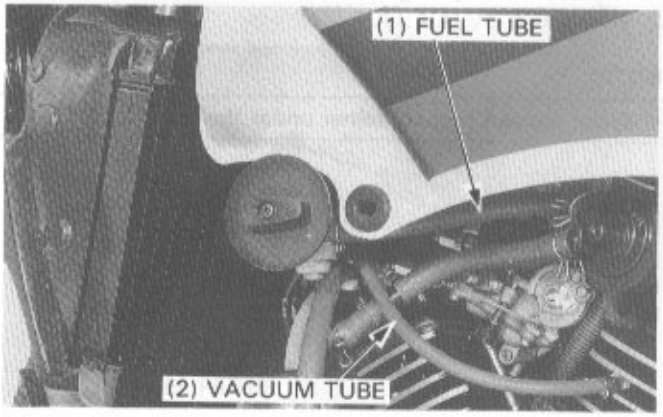

INSTALLATION

Install the fuel tank and tighten the mounting bolt.

TORQUE: 27 N·m (2.7 kg-m, 20 ft-lb)

Connect the fuel tube and vacuum tubes.
Install the seat with the two bolts.
Install the side covers (page 12-4) and side cowling (page 12-2).
Connect the fuel tank cap vent tube (California model only).

NOTE

- After assembling, make sure there are no fuel leaks.

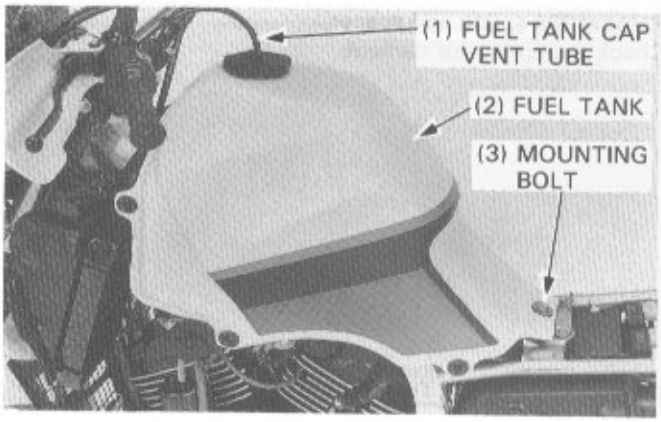

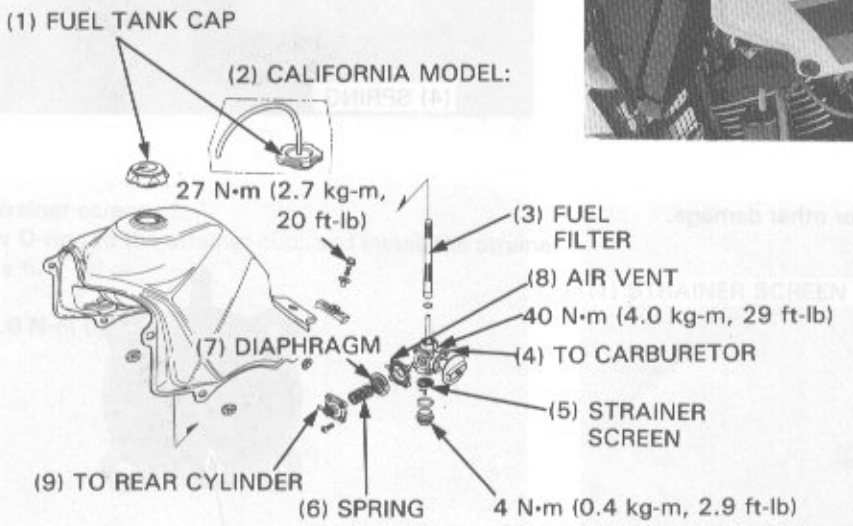

FUEL VALVE

INSPECTION

Install the vacuum pump to the vacuum tube of the fuel valve.

Apply a vacuum to the diaphragm with the vacuum pump and be sure the gasoline flows smoothly.

The fuel valve is operating normally if fuel flows out of the fuel tube when vacuum is applied and if fuel stops flowing out when the vacuum pump is disconnected.

If the fuel valve does not operate normally;
- Inspect the fuel valve for clogging and clean the valve.
- Replace the diaphragm if fuel flows out without applying a vacuum.

NOTE

- Place a clean fuel container under the fuel tube.

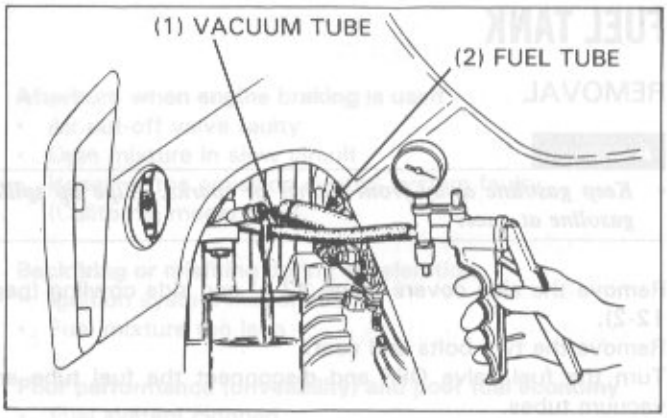

DISASSEMBLY

Remove the fuel tank (page 4-3).
Remove the diaphragm cover with the four screws.

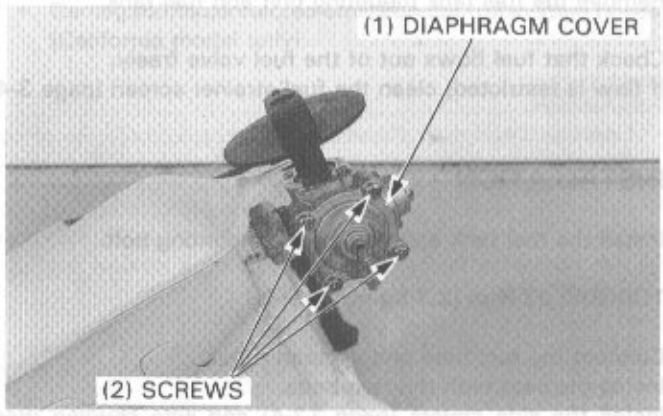

Remove the spring and spacer.
Check the spring for damage.

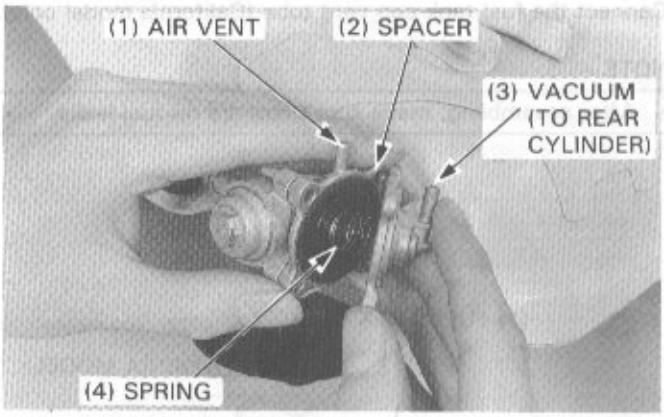

Check the diaphragm for pin holes or other damage.
Replace if necessary.

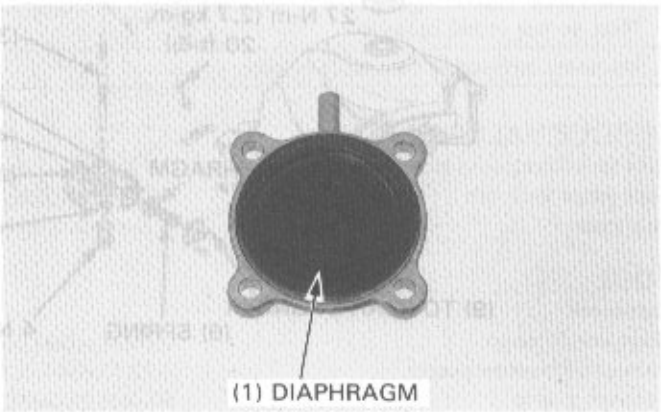

Remove the fuel strainer cup, O-ring and strainer screen.
Clean the fuel strainer screen.

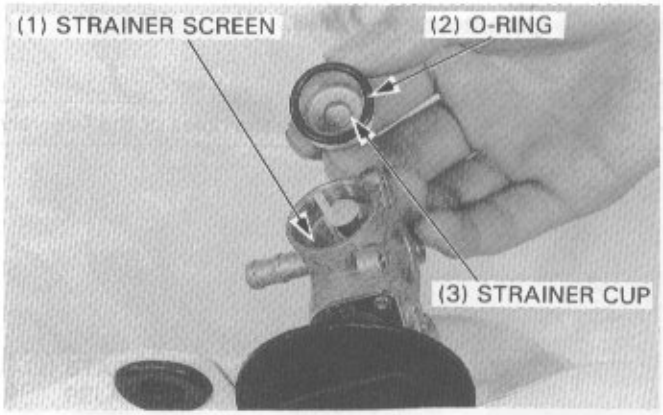

Loosen the lock nut, and remove the fuel valve from the fuel tank.
Remove the fuel filter and O-ring.
Clean the fuel filter.

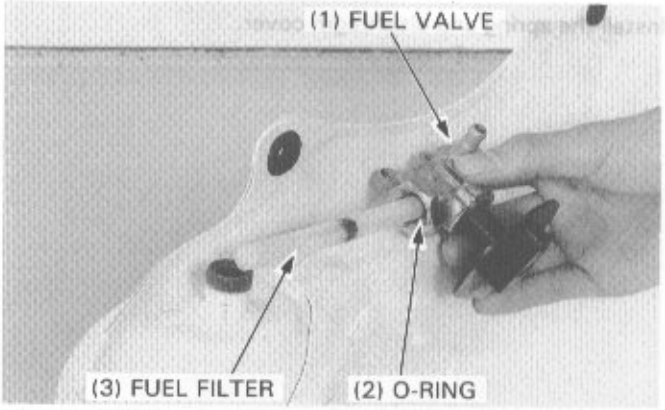

ASSEMBY

Install the fuel filter and a new O-ring to the fuel valve.
Install the fuel valve to the fuel tank.

TORQUE: 40 N·m (4.0 kg-m, 29 ft-lb)

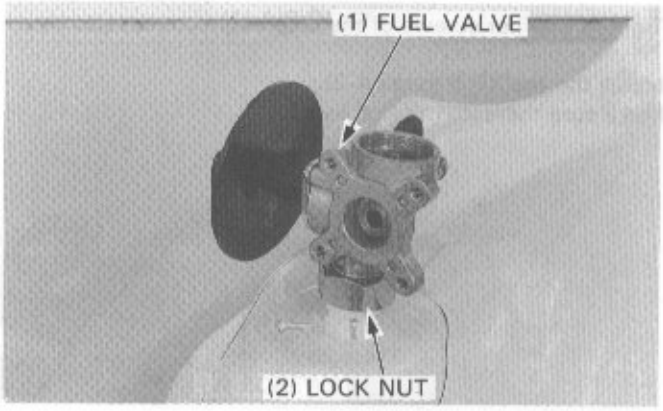

Install the strainer screen.
Install a new O-ring to the strainer cup, and install the strainer cup onto the fuel valve.

TORQUE: 4.0 N·m (0.4 kg-m, 2.9 ft-lb)

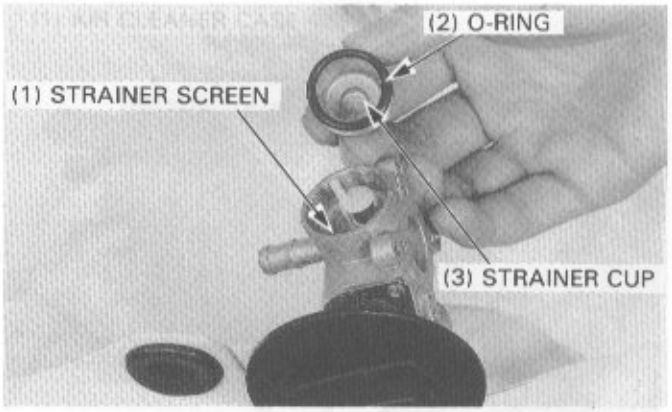

Install the spacer to the fuel valve.

NOTE

- Align the pins of the spacer with the holes of the fuel valve.

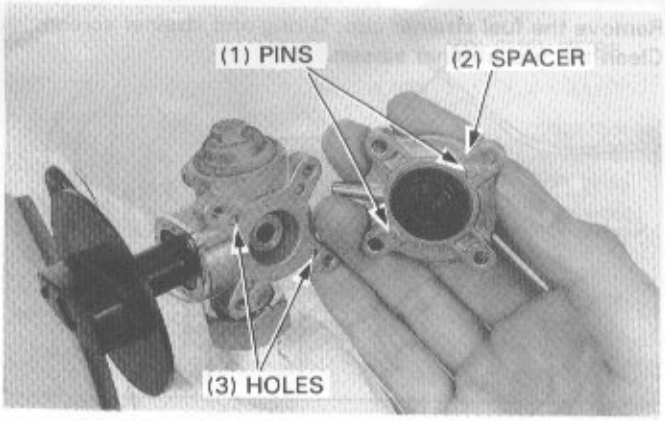

Install the spring and diaphragm cover.

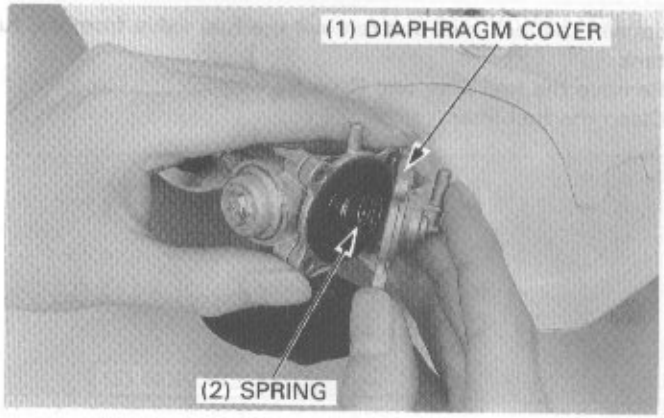

Tighten the four screws of the diaphragm cover securely.

Install the fuel tank (page 4-3).
Make sure there are no fuel leaks.

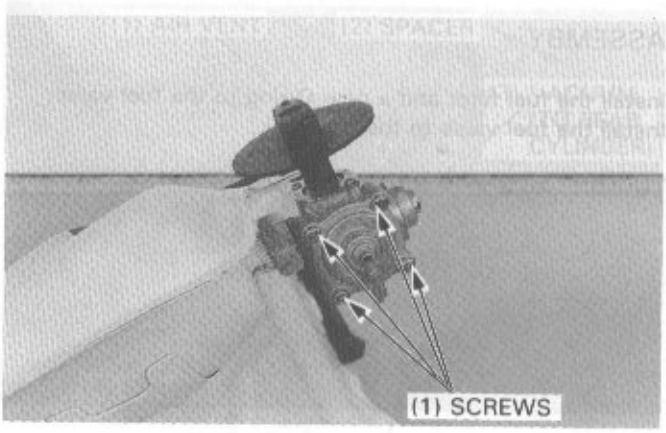

AIR CLEANER CASE

REMOVAL

Rise the rear wheel off the ground by placing a box or workstand under the engine.

CAUTION

- *Do not jack up the engine by putting the jack under the oil filter.*

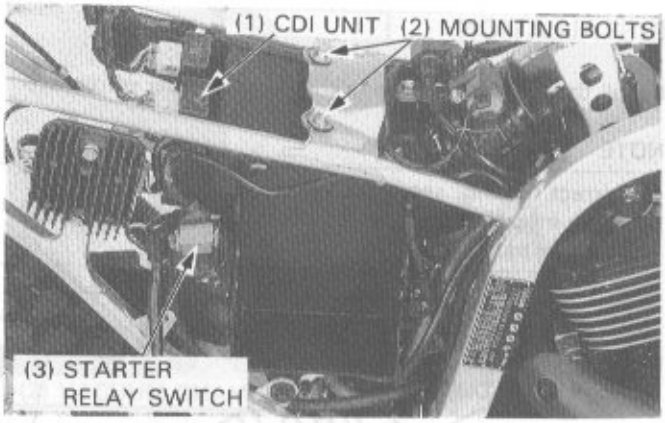

Remove the battery (page 16-3).
Remove the starter relay switch.
Remove the rear fender and inner fender (page 12-5).
Remove the rear wheel (page 14-3).

Remove the air cleaner case mounting bolt on right side.

Remove the CDI unit from the air cleaner case.
Remove the air cleaner case mounting bolts on upper side.

Loosen the insulator band and air duct band screws and remove the air duct.

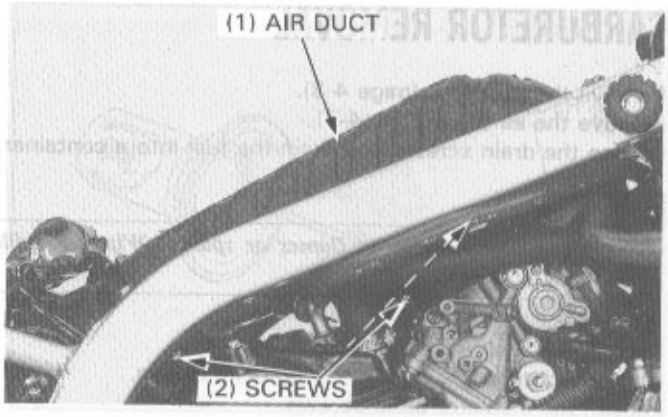

Pull the air cleaner case backward.

INSTALLATION

Install the air cleaner case in the reverse order of removal.

NOTE

- Correct routing, see page 1-9.
- When installing the air duct band, apply oil to the inside of the tube band.

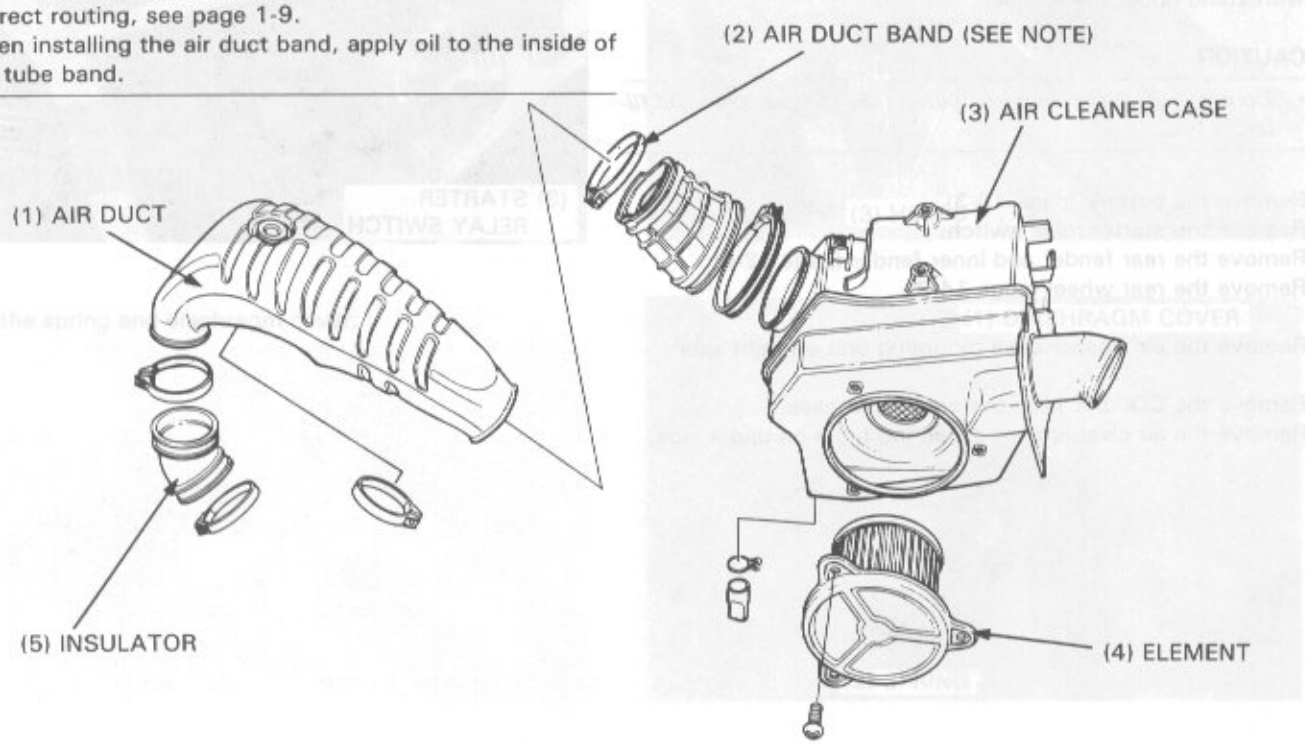

CARBURETOR REMOVAL

Remove the fuel tank (page 4-3).
Remove the air duct (page 4-7).
Loosen the drain screws and drain the fuel into a container.

⚠ WARNING

- ***Keep gasoline away from flames or sparks. Wipe up spilled gasoline at once.***

Disconnect the throttle cables.
Disconnect the right and left side choke cables.
Loosen the insulator band screws.
Pull the carburetors upward and away from the engine.

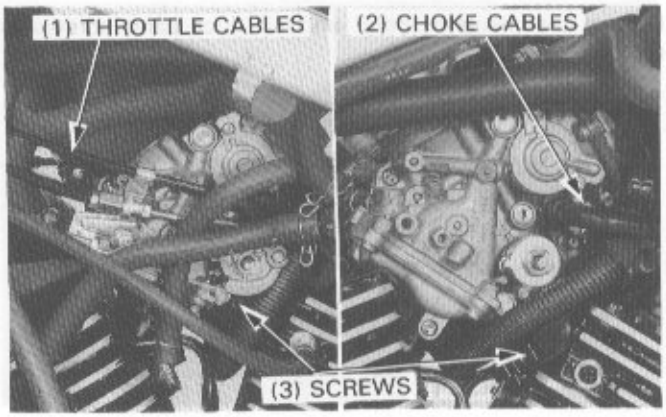

CARBURETOR DISASSEMBLY

NOTE

- The disassembly of the carburetor can be done without separating the carburetors.

Remove the insulator from the carburetor, loosening the screw.
Remove the fuel tube.

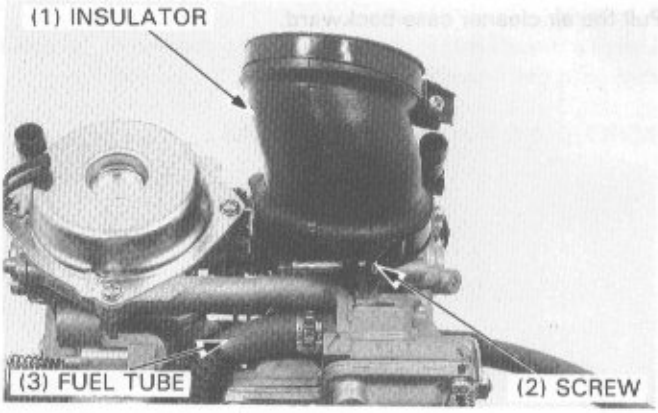

VACUUM CHAMBER

Remove the four screws and vacuum chamber cover.

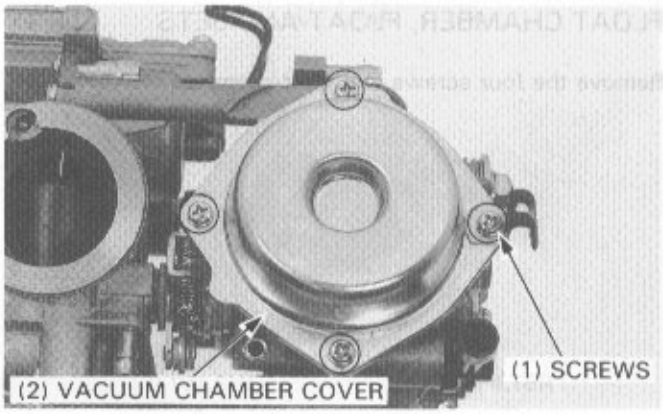

Remove the spring, diaphragm and vacuum piston.
Inspect the vacuum piston for wear, nicks, scratches or other damage.

Make sure the piston moves up and down freely in the chamber.

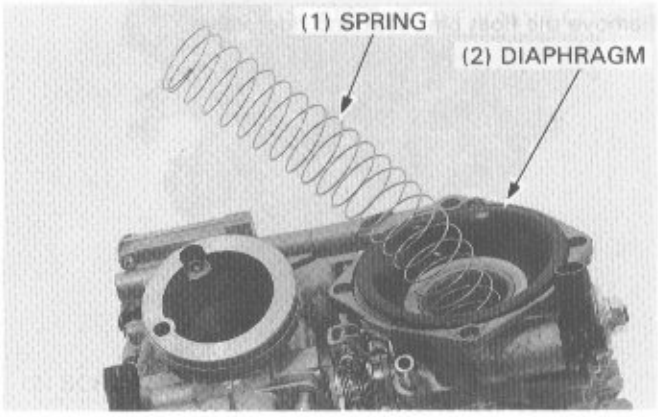

Push the jet needle holder in and turn it in 60 degrees counterclockwise.

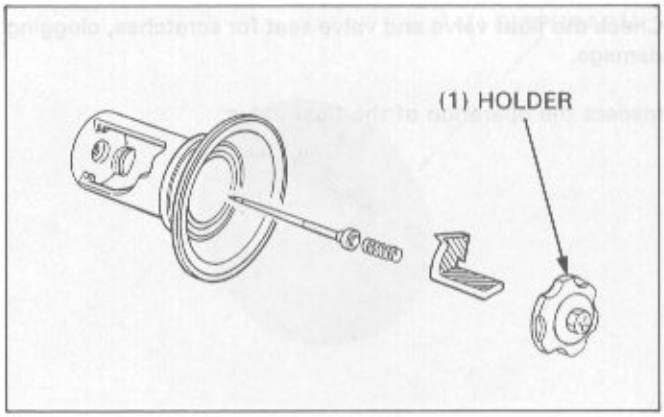

Then remove the needle holder, spring and jet needle from the piston.
Inspect the needle for excessive wear at the tip, bending or other damage.
Inspect the diaphragm for damage or pin holes.
Inspect the vacuum piston for wear or damage.

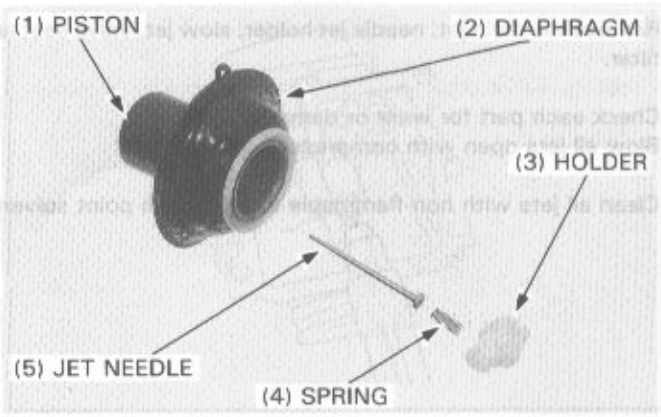

FLOAT CHAMBER, FLOAT AND JETS

Remove the four screws and float chamber.

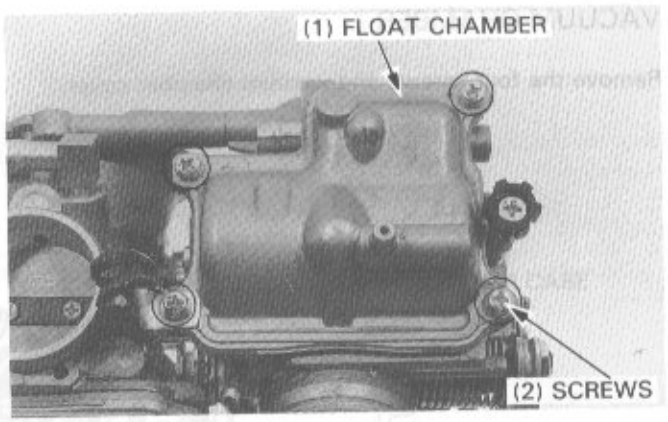

Remove the float pin, float and float valve.

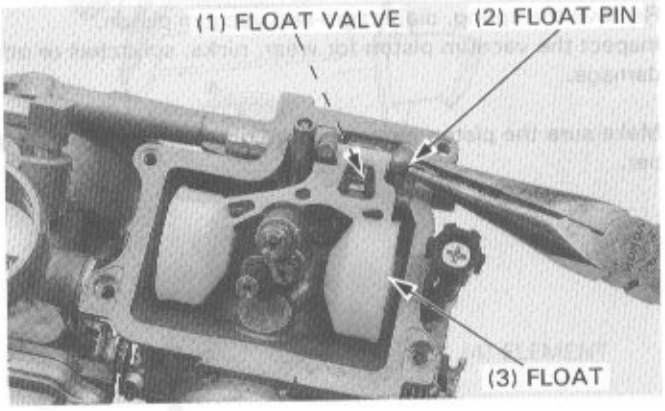

Check the float valve and valve seat for scratches, clogging or damage.

Inspect the operation of the float valve.

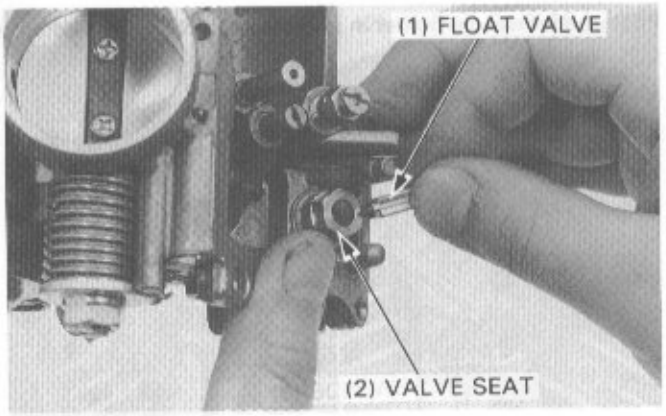

Remove the main jet, needle jet holder, slow jet, valve seat and filter.

Check each part for wear or damage.
Blow all jets open with compressed air.

Clean all jets with non-flammable or high flash point solvent.

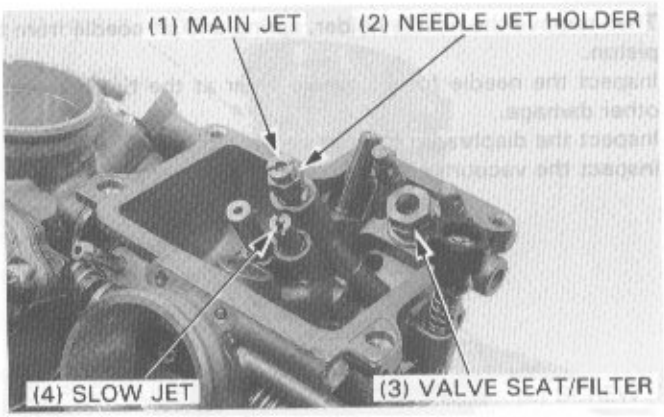

Inspect the float valve seat and filter for grooves, nicks or deposits.

Clean the filter with low-compressed air.

NOTE

- Do not use high-pressure air.

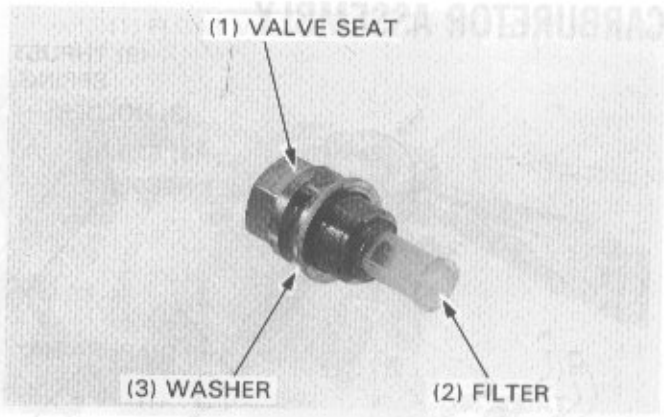

AIR CUT-OFF VALVE

Remove the two screws and air cut-off valve cover.
Remove the spring, diaphragm and O-ring.

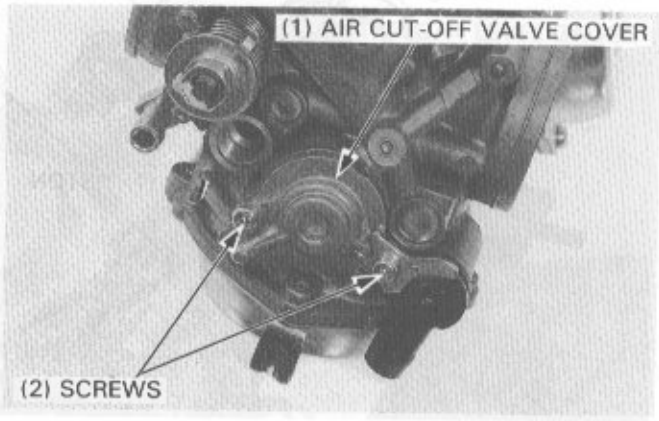

Check the diaphragm for pin holes or other damage.

Replace if necessary.

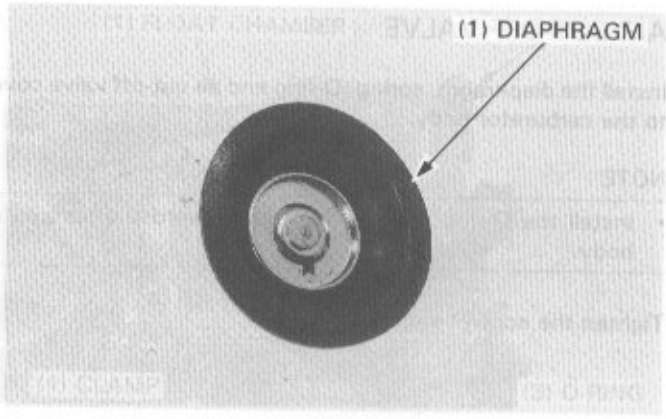

Separate the carburetors (page 4-14).
Blow all passages open with compressed air before installing the jets and valves.

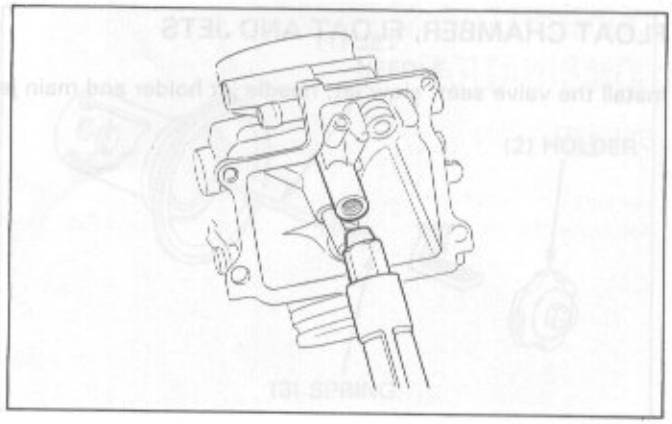

CARBURETOR ASSEMBLY

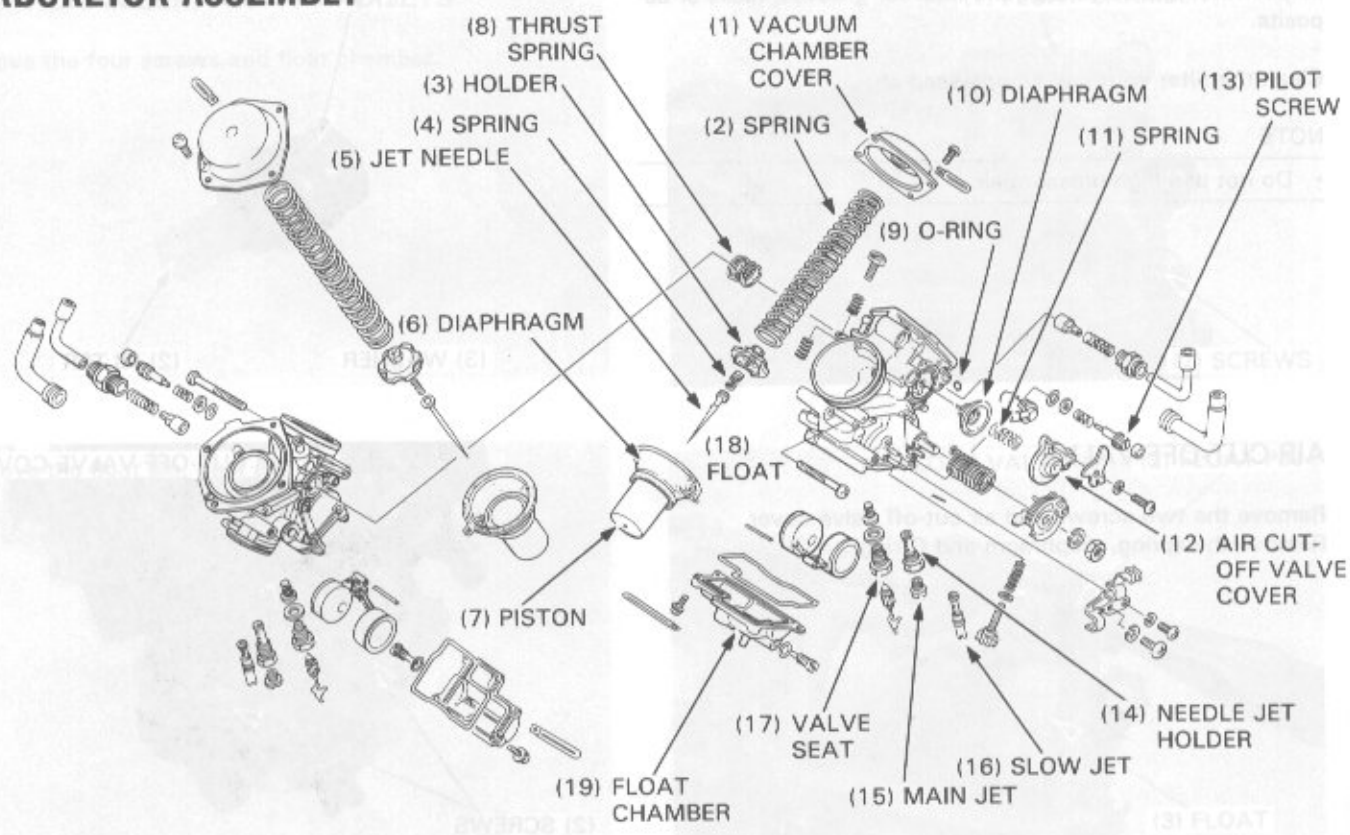

AIR CUT-OFF VALVE

Install the diaphragm, spring, O-ring and air cut-off valve cover to the carburetor body.

NOTE

- Install the O-ring with its flat side toward the carburetor body.

Tighten the screws securely.

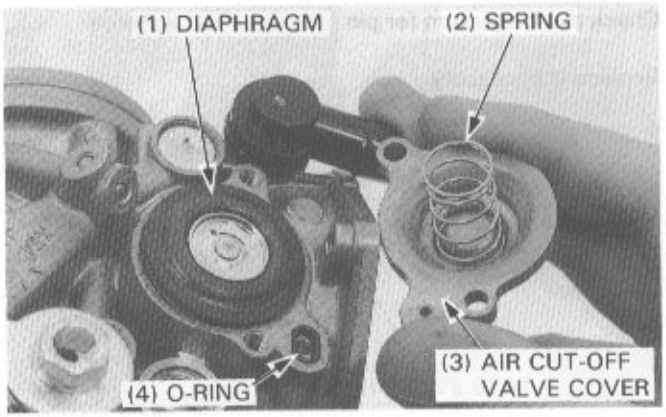

FLOAT CHAMBER, FLOAT AND JETS

Install the valve seat, slow jet, needle jet holder and main jet.

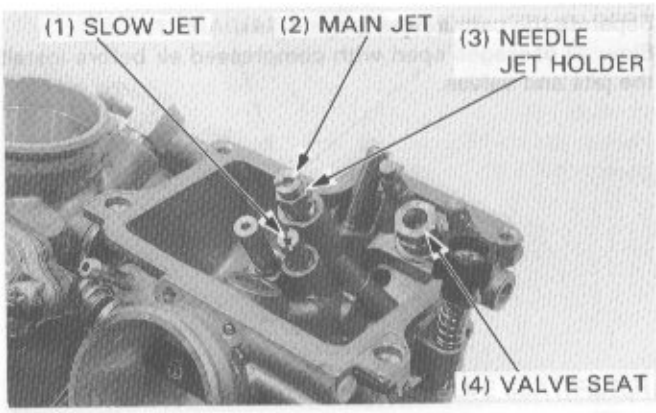

Install the float with the float valve toward the carburetor body and install the float arm pin through the body and float.

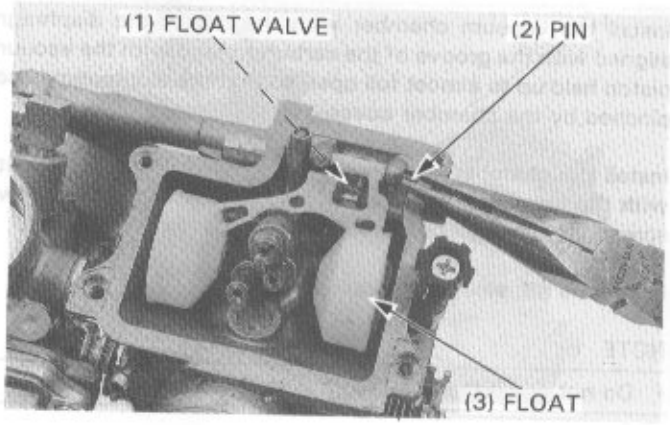

FLOAT LEVEL

Measure the float level with the float tang just contacting the float valve.

FLOAT LEVEL: 7 mm (0.3 in)

TOOL:
Float level gauge **07401–0010000**

Adjust the float level by carefully bending the float tang.

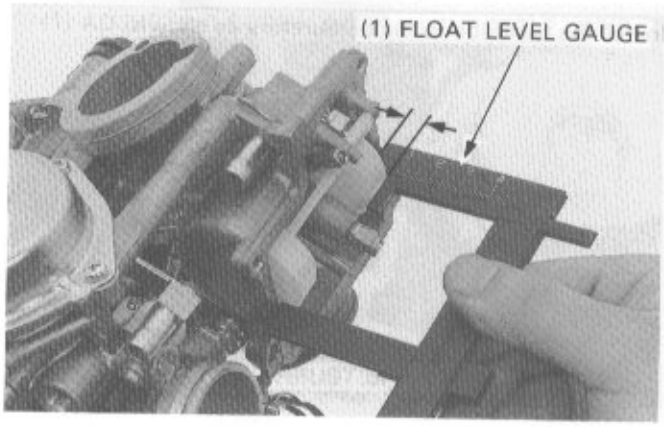

Apply thin oil to the O-ring.

Install the float chamber and tighten the screws securely.

NOTE

- Install the fuel tube clamp at the correct position.

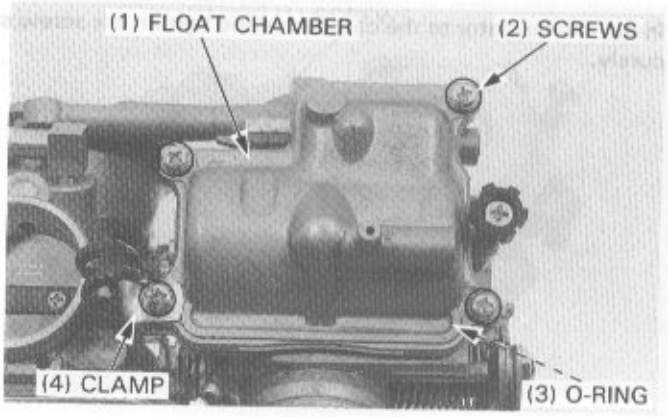

VACUUM CHAMBER

Install the jet needle, spring and needle holder to the vacuum piston.
Push the jet needle holder in and turn it in 60 degrees clockwise.

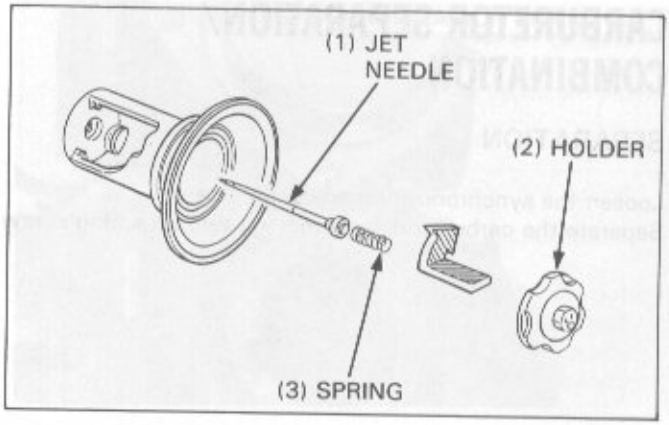

Install the vacuum chamber with the tab of the diaphragm aligned with the groove of the carburetor and with the vacuum piston held up to almost full open so that the diaphragm is not pinched by the chamber cover.

Install the chamber cover with the spring, aligning its cavity with the hole in the carburetor, and secure with at least two screws on diagonal before releasing the vacuum piston.

Install the remaining screws.

NOTE

- Do not pinch the diaphragm with the chamber cover.

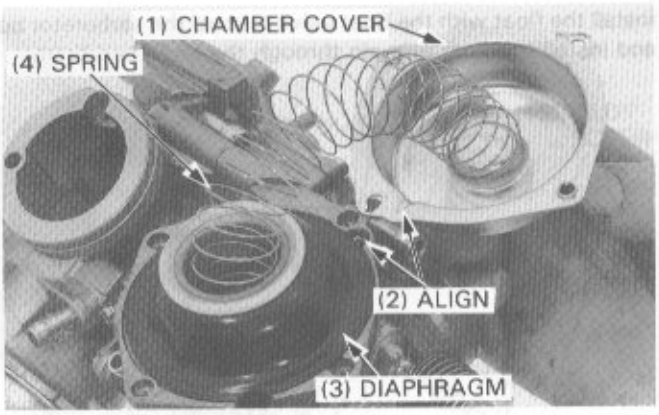

Install the fuel tube to the carburetors as shown.

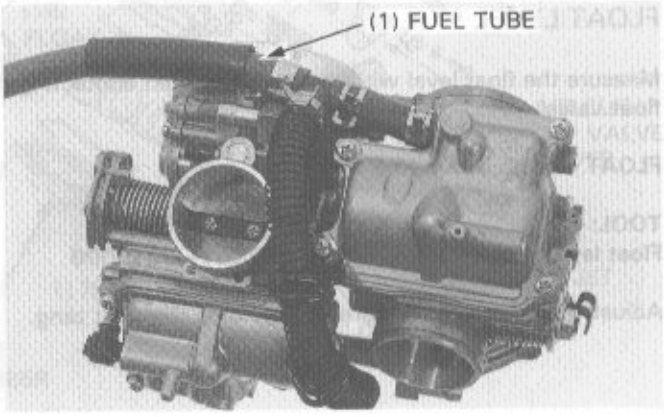

Install the insulator to the carburetor and tighten the screw securely.

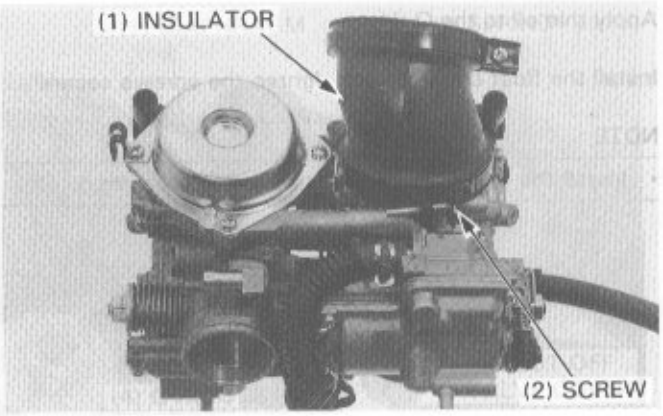

CARBURETOR SEPARATION/ COMBINATION

SEPARATION

Loosen the synchronization adjusting screw.
Separate the carburetors by removing two attaching screws.

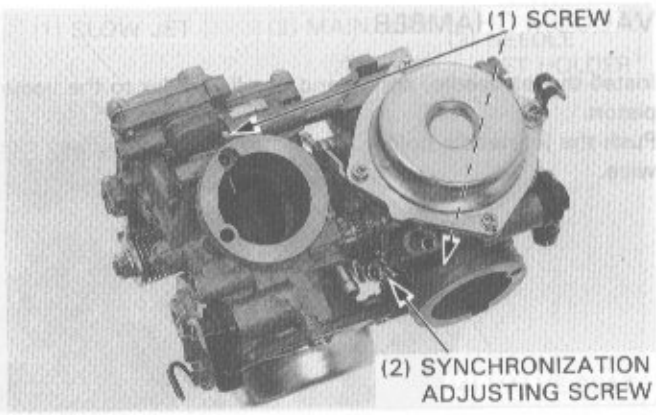

Take care not to lose the thrust spring and synchronization adjusting spring.

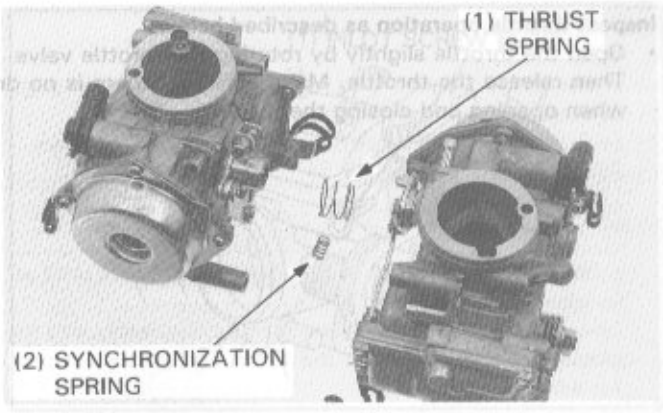

COMBINATION

Loosen the synchronization adjusting screw until there is no tension.

Install the thrust spring between the throttle links.

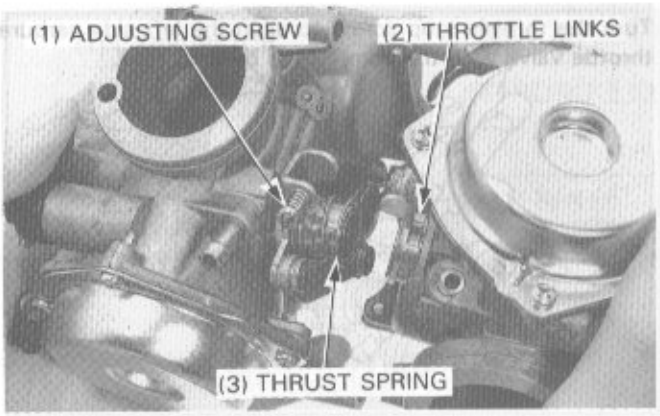

Assemble the carburetors with the two attaching screws.

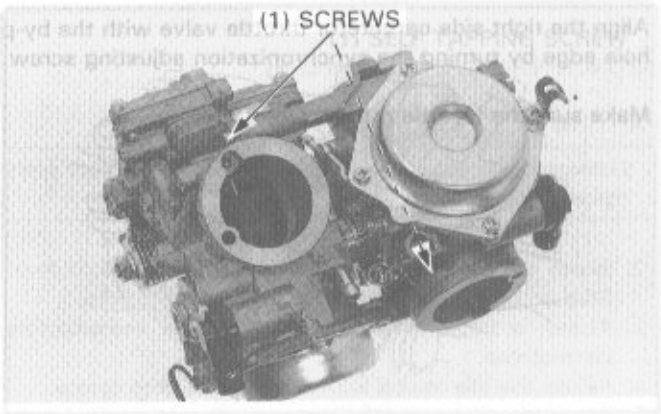

Install the synchronization spring.

Inspect throttle operation as described below:

- Open the throttle slightly by rotating the throttle valve. Then release the throttle. Make sure that there is no drag when opening and closing the throttle.

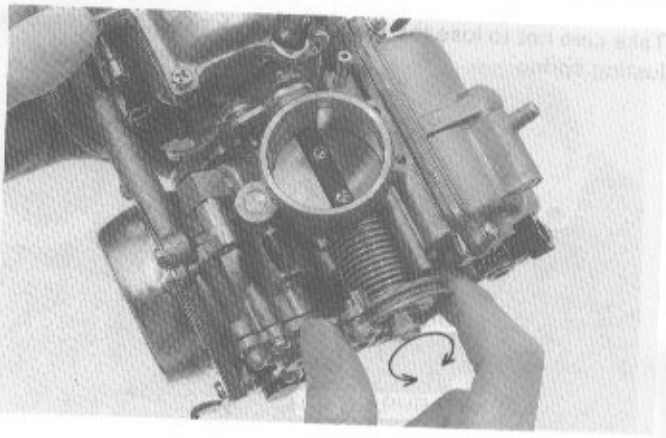

Turn the throttle stop screw to align the left side carburetor throttle valve with the edge of the by-pass hole.

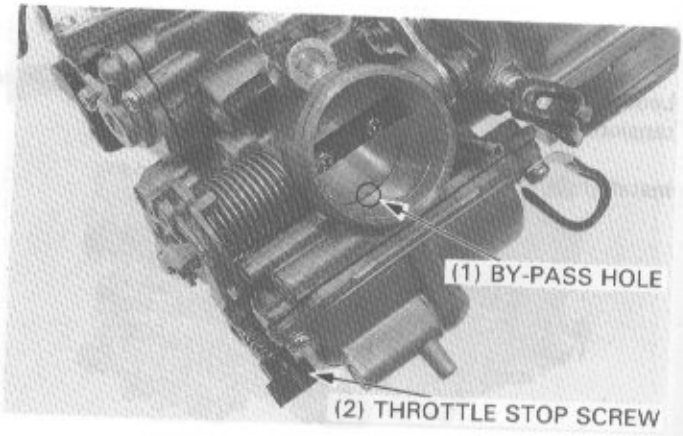

Align the right side carburetor throttle valve with the by-pass hole edge by turning the synchronization adjusting screw.

Make sure the throttle returns smoothly.

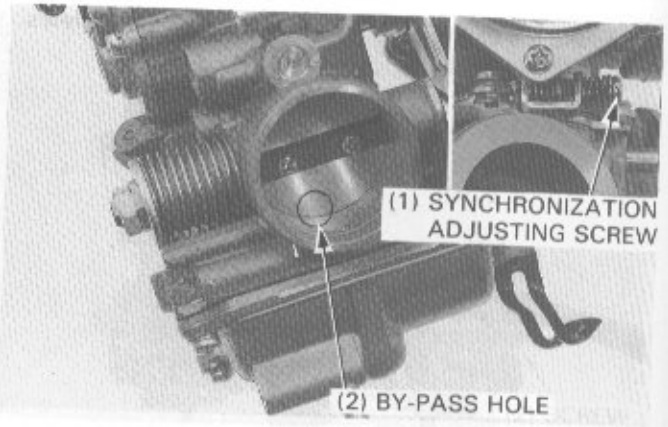

CARBURETOR INSTALLATION

Install the carburetor in the reverse order of removal.

NOTE

- Route the throttle cables properly (pages 1-9 through 1-12).

Perform the following inspections and adjustments.

- Throtte operation (page 3-4).
- Idle speed (page 3-9).
- Choke cable operation (page 3-5).
- Carburetor synchronization (page 3-8).

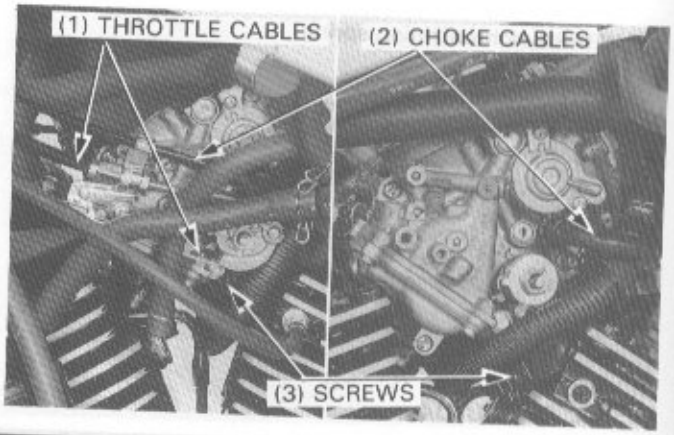

PILOT SCREW

REMOVAL

NOTE

- The pilot screws are factory pre-set and should not be removed unless the carburetors are overhauled.
- The pilot screw plugs are factory installed to prevent pilot screw misadjustment. Do not remove the plugs unless the pilot screws are being removed.
- Cover all openings with tape to keep metal particles out when the plugs are drilled.

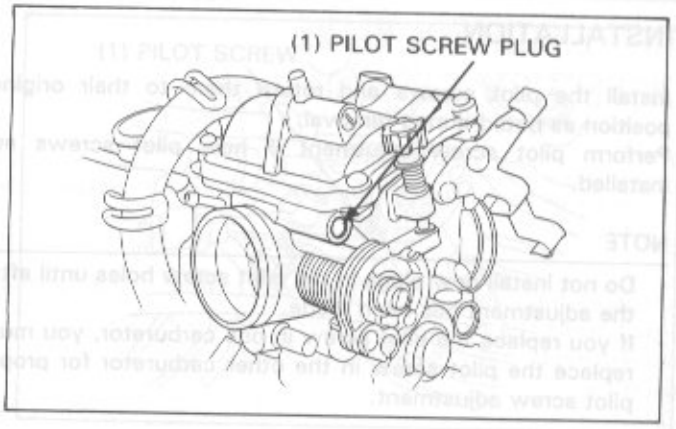

Center punch the pilot screw plug to center the drill point. Drill through the plug with a 4 mm (5/32 in) drill bit. Attach a drill stop to the bit 3 mm (1/8 in) from the end to prevent drilling into the pilot screw.

CAUTION

- *Be careful not to drill into the pilot screw.*
- *If you replace the pilot screw in one carburetor, you must replace the pilot screw in the other carburetor for proper pilot screw adjustment (page 4-18).*

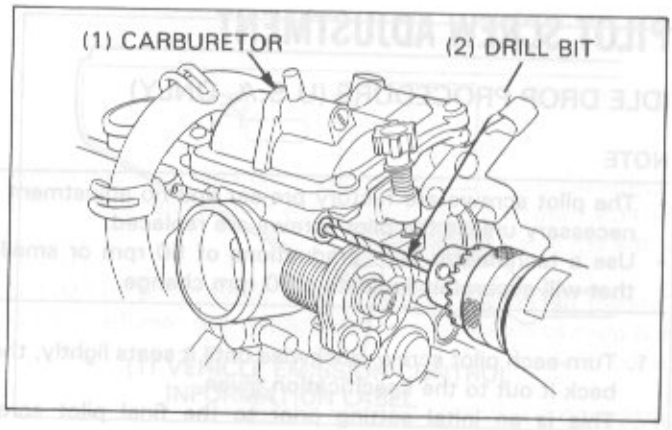

Force a self-tapping 4 mm screw (H/C 069399, P/N 93903–35410) into the drilled plug and continue turning the screwdriver until the plug rotates with the screw.

Pull on the screw head with pliers to remove the plug.

Use compressed air to clean the pilot screw area and remove metal shavings.

⚠ WARNING

- *Use appropriate eye protection.*

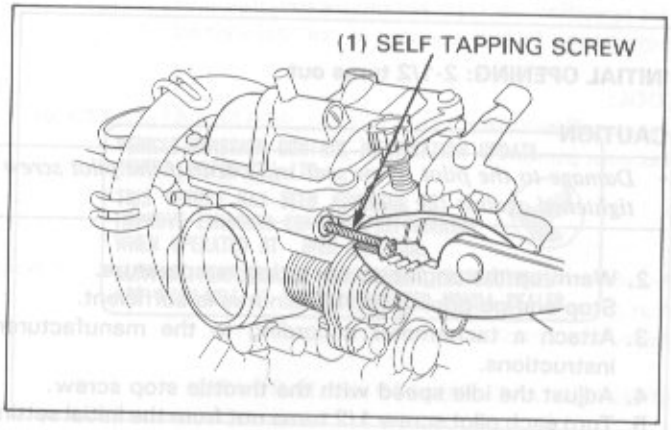

Turn each pilot screw in and carefully count the number of turns until it seats lightly. Make a note of this to use as a reference when reinstalling the pilot screws.

CAUTION

- *Damage to the pilot seat will occur if the pilot screw is tightened against the seat.*

Remove the pilot screws and inspect them. Replace them if they are worn or damaged.

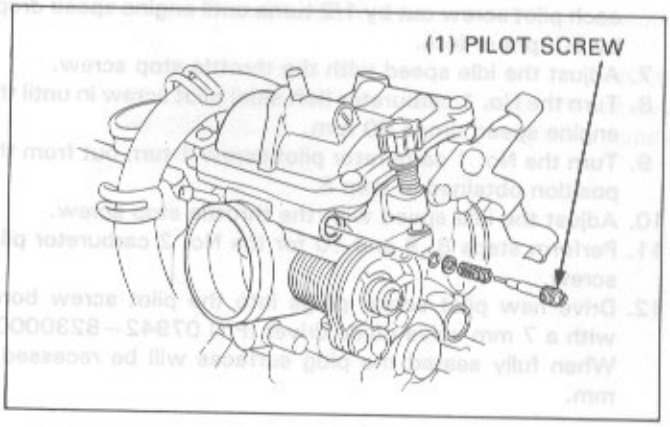

INSTALLATION

Install the pilot screws and return them to their original position as noted during removal.
Perform pilot screw adjutment if new pilot screws are installed.

NOTE

- Do not install new plugs in the pilot screw holes until after the adjustment has been made.
- If you replace the pilot screw in one carburetor, you must replace the pilot screw in the other carburetor for proper pilot screw adjustment.

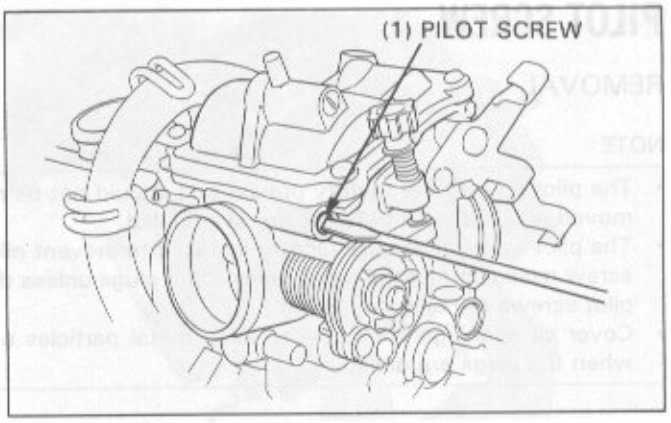

PILOT SCREW ADJUSTMENT

IDLE DROP PROCEDURE (U.S.A. ONLY)

NOTE

- The pilot screws are factory pre-set and no adjustment is necessary unless the pilot screws are replaced.
- Use a tachometer with graduations of 50 rpm or smaller that will accurately indicate a 50 rpm change.

1. Turn each pilot screw clockwise until it seats lightly, then back it out to the specification given.
   This is an inital setting prior to the final pilot screw adjustment.

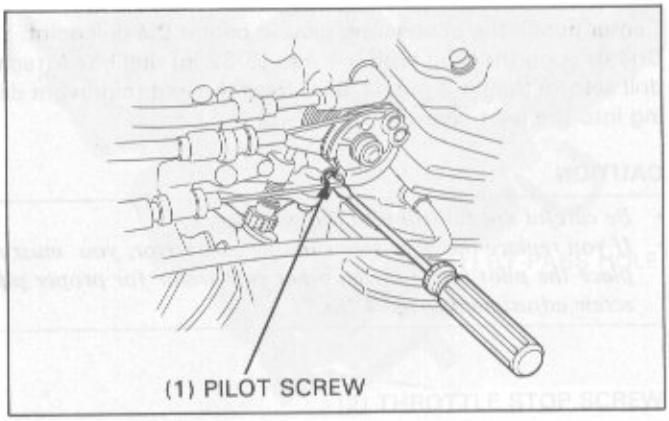

INITIAL OPENING: 2-1/2 turns out

CAUTION

- *Damage to the pilot screw seat will occur if the pilot screw is tightened against the seat.*

2. Warm up the engine to operating temperature.
   Stop and go driving for 10 minutes is sufficient.
3. Attach a tachometer according to the manufacturer's instructions.
4. Adjust the idle speed with the throttle stop screw.
5. Turn each pilot screw 1/2 turns out from the initial setting.
6. If the engine speed increases by 50 rpm or more, turn each pilot screw out by 1/2 turns until engine speed drops by 50 rpm or less.
7. Adjust the idle speed with the throttle stop screw.
8. Turn the No. 1 carburetor (left side) pilot screw in until the engine speed drops 50 rpm.
9. Turn the No. 1 carburetor pilot screw 1 turn out from the position obtained in step 8.
10. Adjust the idle speed with the throttle stop screw.
11. Perform steps 8, 9 and 10 for the No. 2 carburetor pilot screw.
12. Drive new pilot screw plugs into the pilot screw bores with a 7 mm valve guide driver (P/N 07942—8230000). When fully seated the plug surfaces will be recessed 1 mm.

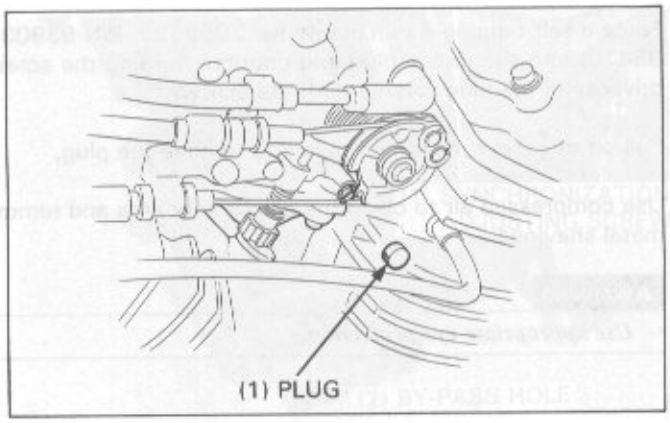

HIGH ALTITUDE ADJUSTMENT (U.S.A. ONLY)

When the vehicle is to be operated continuously above 2,000 meters (6,500 feet), the carburetors must be readjusted as described below to improve driveability and decrease exhaust emissions.

Remove the each pilot screw plug. (Page 4-17).
Warm up the engine to normal operating temperature.
Stop and go driving for 10 minutes is sufficient.

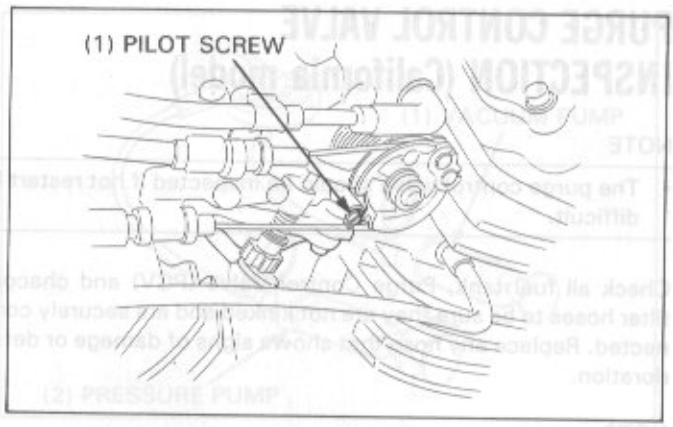

Turn the pilot screw clockwise 1/2 turn.
Adjust the idle speed to the specification, with the throttle stop screw.

IDLE SPEED: 1,300 ± 100 rpm

NOTE

- These adjustments must be made at high altitude to ensure proper high altitude operation.

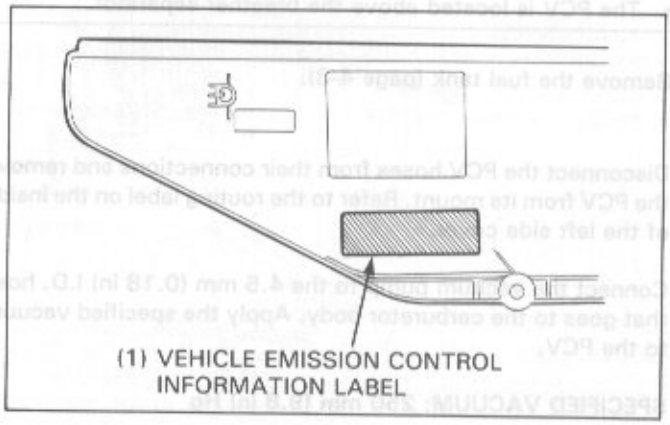

Drive new pilot screw plugs into the pilot screw bores. (Page 4-18).
Attach the Vehicle Emission Control Information Update label as shown. See SL #132 for information on obtaining the label.

NOTE

- Do not attach the label to any part that can be easily removed from the vehicle.

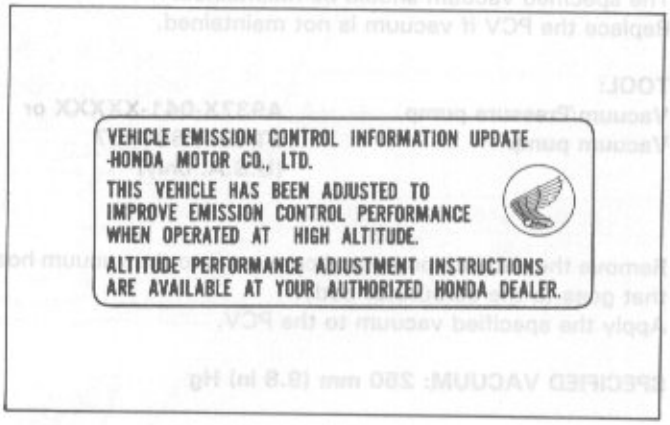

⚠ WARNING

- ***Operation at an altitude lower than 1,500 meters (5,000 feet) with the carburetors adjusted for high altitudes may cause the engine to idle roughly and stall.***

When the vehicle is to be operated countinuously below 1,500 meters (5,000 feet); turn each pilot screw counterclockwise 1/2 turns to its original position and adjust the idle speed to the specification.
Drive new pilot screw plugs into the pilot screw bores. (Page 4-18)
Be sure to do these adjustments at low altitude with the engine at normal operating temperature.

PURGE CONTROL VALVE INSPECTION (California model)

NOTE

- The purge control valve should be inspected if hot restart is difficult.

Check all fuel tank, Purge Control Valve (PCV) and chacoal filter hoses to be sure they are not kinked and are securely connected. Replace any hose that shows signs of damage or deterioration.

NOTE

- The PCV is located above the breather separator.

Remove the fuel tank (page 4-3).

Disconnect the PCV hoses from their connections and remove the PCV from its mount. Refer to the routing label on the inside of the left side cover.

Connect the vacuum pump to the 4.5 mm (0.18 in) I.D. hose that goes to the carburetor body. Apply the specified vacuum to the PCV.

SPECIFIED VACUUM: 250 mm (9.8 in) Hg

The specified vacuum should be maintained.
Replace the PCV if vacuum is not maintained.

TOOL:

Vacuum/Pressure pump	**A937X-041-XXXXX or**
Vacuum pump	**ST-AH-260-MC7 (U.S.A. only)**

Remove the vacuum pump and connect it to the vacuum hose that goes to the carburetor body.
Apply the specified vacuum to the PCV.

SPECIFIED VACUUM: 250 mm (9.8 in) Hg

The specified vacuum should be maintained.
Replace the PCV if vacuum is not maintained.

TOOL:

Vacuum/Pressure pump	**A937X-041-XXXXX or**
Vacuum pump	**ST-AH-260-MC7 (U.S.A. only)**

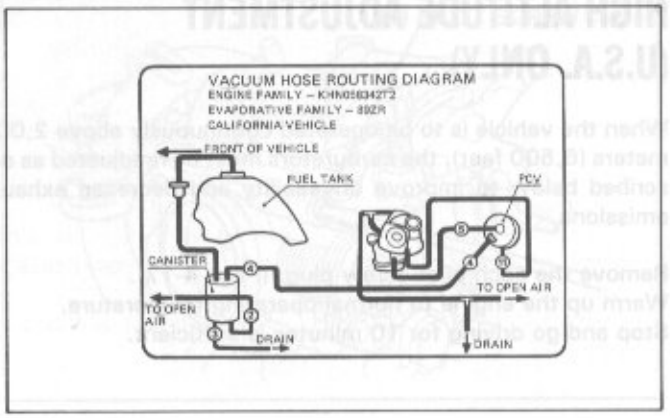

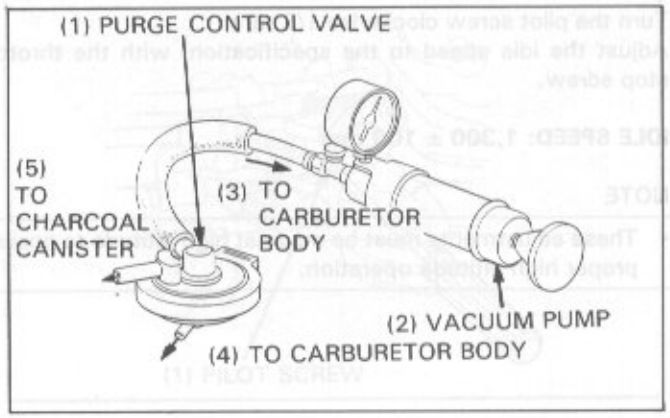

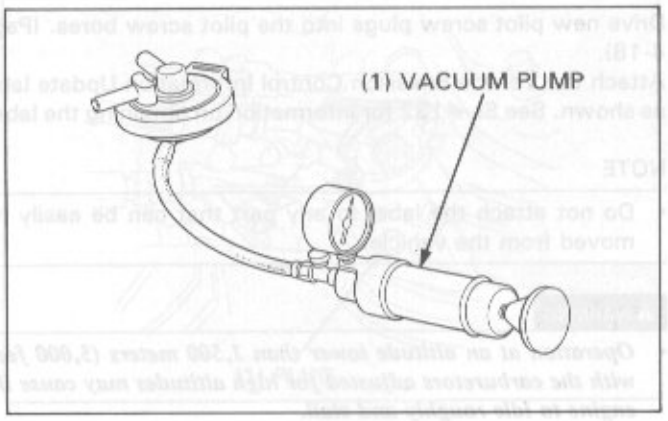

Connect a pressure pump to 8 mm (0.31 in) I.D. hose that goes to the chacoal canister. While applying the specified vacuum to the PCV hose that goes to the carburetor body, pump air through the canister hose.
Air should flow through the PCV and out the hose that goes to the carburetor body.
Replace the PCV if air does not flow out.

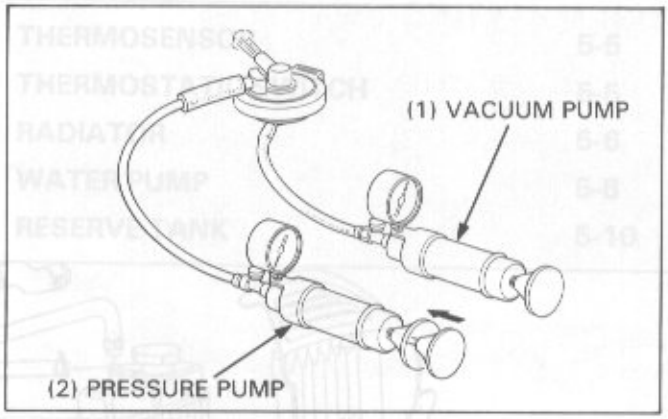

CAUTION

- *To prevent damage to the purge control valve, do not use high-pressure air sources. Use a hand operated air pump only.*

TOOL:

Vacuum/Pressure pump	**A937X-041-XXXXX or**
Vacuum pump	**ST-AH-260-MC7**
Pressure pump	**ST-AH-255-MC7**
	(U.S.A. only)

Remove the pumps, install the PCV into its mount, route and reconnect the hoses according to the routing label.

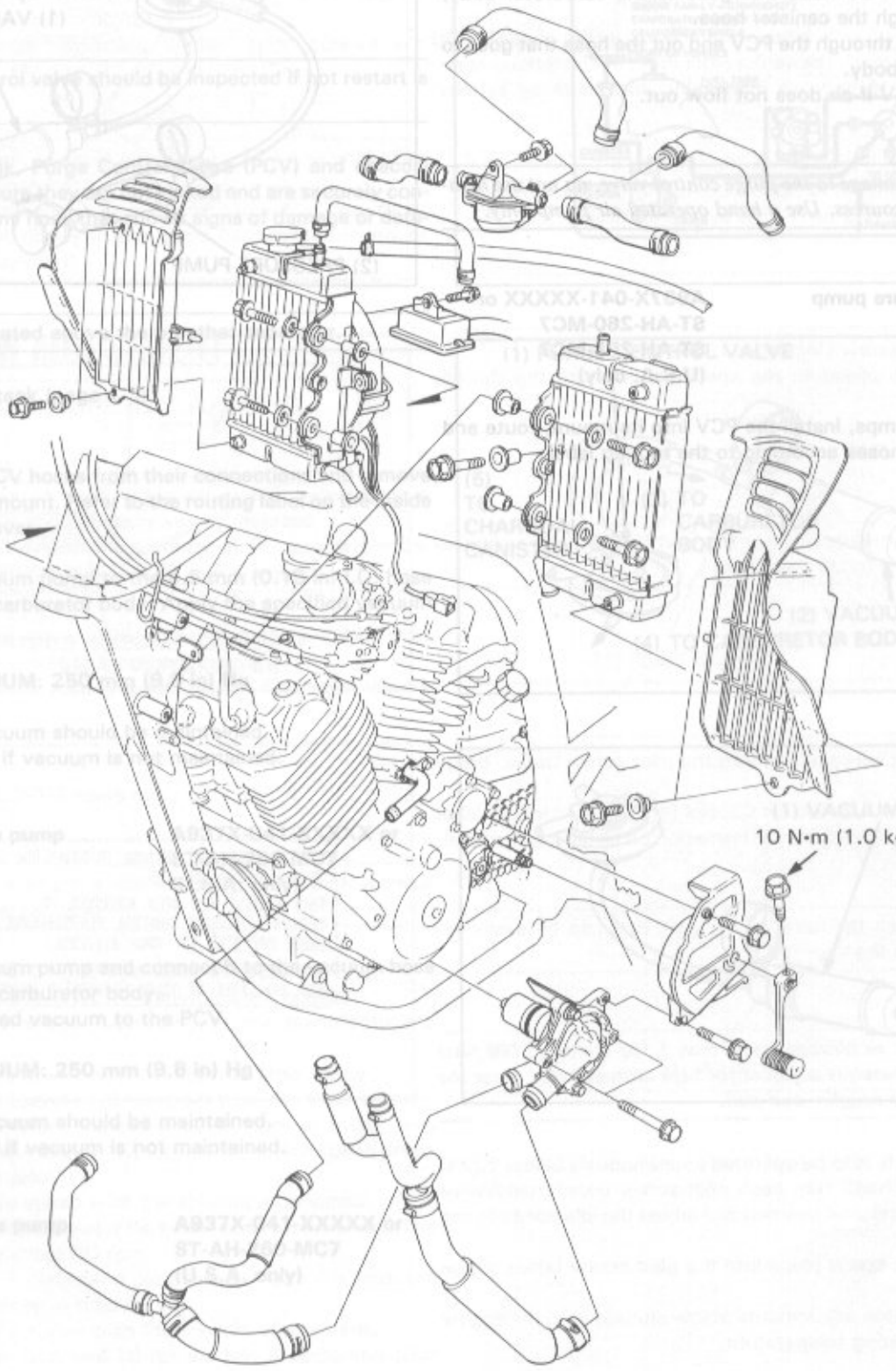
10 N·m (1.0 kg-m, 7 ft-lb)

SERVICE INFORMATION	5-1	THERMOSENSOR	5-5
TROUBLESHOOTING	5-1	THERMOSTATIC SWITCH	5-5
SYSTEM TESTING	5-2	RADIATOR	5-6
COOLANT REPLACEMENT	5-3	WATER PUMP	5-8
THERMOSTAT	5-3	RESERVE TANK	5-10

SERVICE INFORMATION

GENERAL

⚠ WARNING

- ***Do not remove the radiator cap when the engine is hot. The coolant is under pressure and severe scalding could result. The engine must be cool before servicing the cooling system.***

- Use only distilled water and ethylene glycol in the cooling system. A 50/50 mixture is recommended for maximum corrosion protection. Do not use alcohol-based antifreeze.
- Add coolant at the reserve tank. Do not remove the radiator cap except to refill or drain the system when the system is cool.
- All cooling system service can be done with the engine in the frame.
- Avoid spilling coolant on painted surfaces.
- After servicing the system, check for leaks with a cooling system tester.

SPECIFICATIONS

ITEM		SPECIFICATIONS		
Radiator cap relief pressure		88–127 kPa (0.9–1.3 kg/cm², 13–18 psi)		
Freezing point (Hydrometer test):		55% Distilled water + 45% ethylene glycol: −32°C (−25°F) 50% Distilled water + 50% ethylene glycol: −37°C (−34°F) 45% Distilled water + 55% ethylene glycol: −44.5°C (−48°F)		
Coolant capacity: Total system		1.75 liters (1.85 US qt, 1.54 Imp qt)		
Thermostat		Begins to open: 80° to 84°C (176° to 183°F) Valve lift: Minimum of 8 mm at 95°C (0.3 in at 203°F)		
Boiling point (with 50/50 mixture):		Unpressurized: 107.7°C (226°F) Cap on, pressurized: 125.6°C (258°F)		
Thermosensor	temperature	50°C (122°F)	80°C (176°F)	120°C (248°F)
	resistance	153.9 Ω	51.9 Ω	16.1 Ω
Thermostatic switch		Comes into action: 98° to 102°C (208° to 216°F) Stops: below 93°–97°C (199°–207°F)		

TORQUE VALUES

Thermostatic switch	18 N·m (1.8 kg-m, 13 ft-lb)
Gearshift pedal	10 N·m (1.0 kg-m, 7 ft-lb)

TROUBLESHOOTING

Engine temperature too high

- Faulty temperature gauge or gauge sensor
- Thermostat stuck closed
- Faulty radiator cap
- Insufficient coolant or coolant level too low
- Passages blocked in radiator, hoses or water jacket
- Cooling fan motor does not turn
  - Broken or loose sub fuse.
  - Faulty fan motor
  - Faulty thermostatic switch
  - Poorly contact or open circuit in harness
- Faulty water pump

Engine temperature too low

- Faulty temperature gauge or gauge sensor.
- Thermostat stuck open

Coolant leaks

- Faulty pump mechanical seal
- Deteriorated O-rings

SYSTEM TESTING

COOLANT MIXTURE

Test the coolant mixture with an antifreeze tester.
For maximum corrosion protection, a 50/50% solution of ethylene glycol and distilled water is recommended.

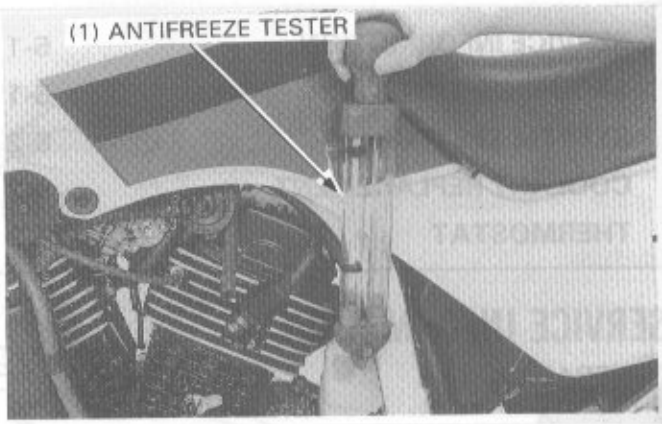

RADIATOR CAP INSPECTION

Remove the right side cowling (page 12-2).
Remove the radiator cap.

⚠WARNING

- *Be sure the engine is cool before removing the cap.*

Pressure test the radiator cap. Replace the radiator cap if it does not hold pressure, or if it's relief pressure is too high or too low. It must hold the specified pressure for at least six seconds.

NOTE

- Before installing the cap on the tester, wet the sealing surfaces with water.

RADIATOR CAP RELIEF PRESSURE:
88–127 kPa (0.9–1.3 kg/cm², 13–18 psi)

SYSTEM PRESSURE TEST

Remove the right side cowling (page 12-2) and radiator cap.

Pressurize the radiator, engine and hoses, and check for leaks.

CAUTION

- *Excessive pressure can damage the radiator. Do not exceed 125 kPa (1.25 kg/cm², 18 psi)*

Repair or replace components if the system will not hold the specified pressure for at least six seconds.

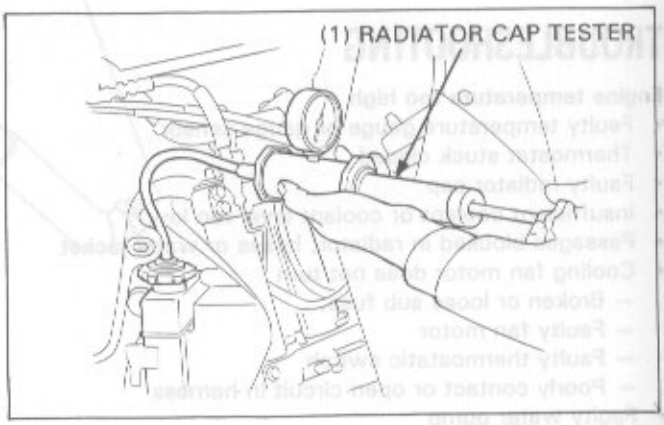

COOLANT REPLACEMENT

⚠ WARNING

- *The engine must be cool before servicing the coolant replacement, or severe scalding may result.*

Remove the lower cowling (page 12-3).
Remove the radiator cap (page 5-2).

Drain the coolant from the system by removing the drain bolt on the water pump cover.
Install the drain bolt.

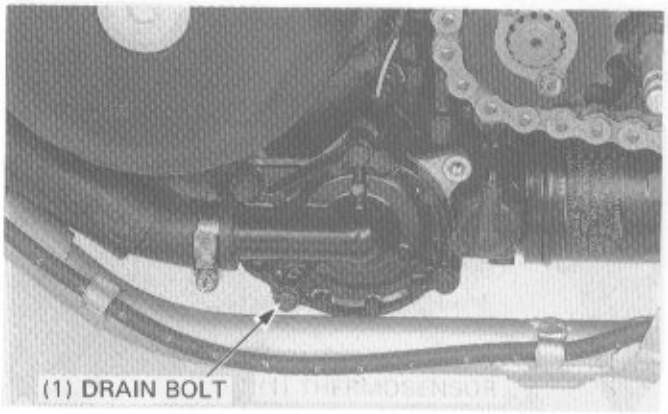

Fill the system with 50/50 mixture of distilled water and ethylene glycol.
Bleed air from the cooling system.

- Apply side stand and shift the transmission into neutral.
- Start the engine and snap the throttle grip, 3–4 times at 4,000–5,000 rpm. Then add coolant up to the radiator filler neck.
- Reinstall the radiator cap.
- Check the level of coolant in the reserve tank and fill to the correct level if the level is low.

Install the lower cowlings (page 12-3).

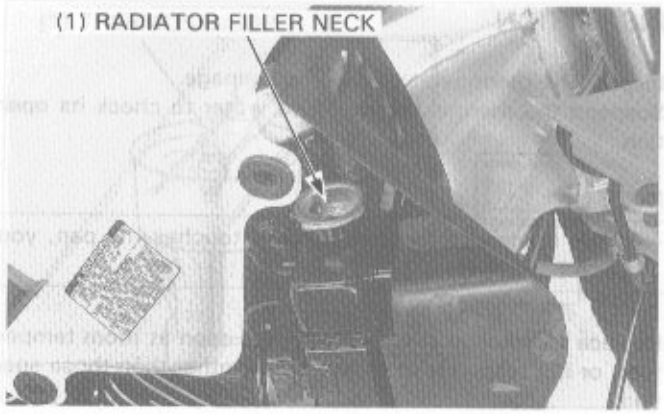

THERMOSTAT

REMOVAL

Remove the fuel tank (page 4-3).
Drain the coolant.
Disconnect the switch connectors.

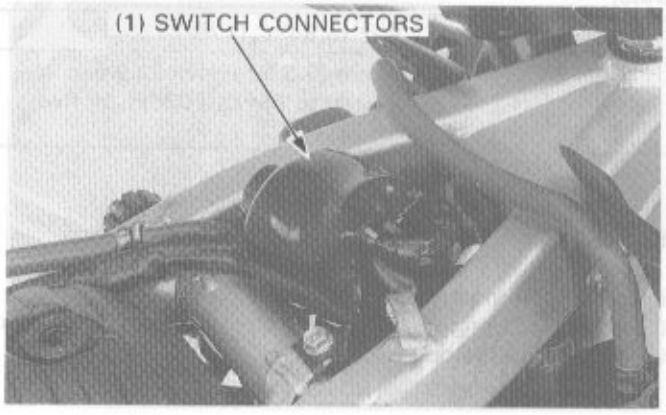

Remove the thermostat housing cover by disconnecting the water hoses and removing the housing cover mounting bolts.

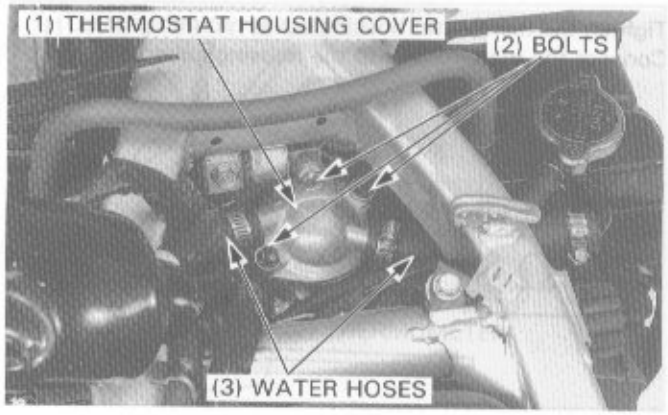

Remove the thermostat from the housing.

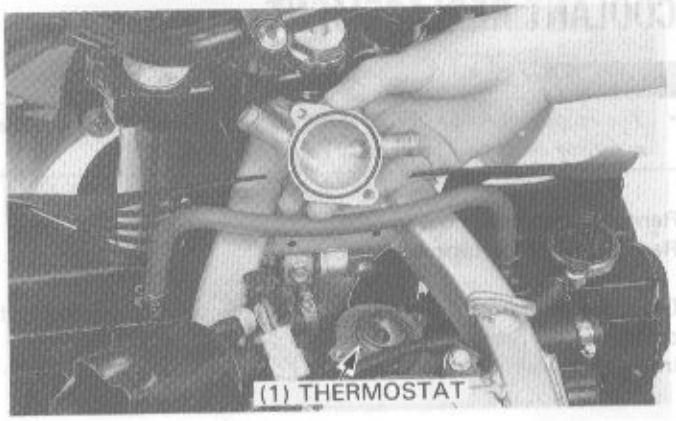

INSPECTION

Inspect the thermostat visually for damage.
Suspend the thermostat in heated water to check its operation.

NOTE

- If the thermostat or thermometer touches the pan, you'll get a false reading.

Replace thermostat if the valve stays open at room temperature, or if it responds at temperatures other than those specified.

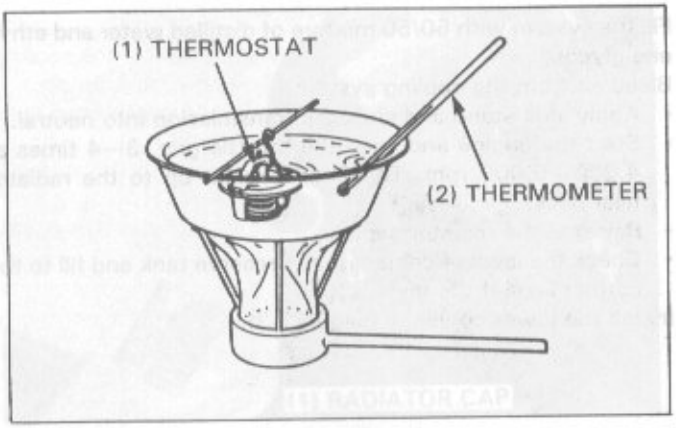

Data:

Starts to open	80° to 84°C (176–183°F)
Valve lift	8 mm (0.3 in) minimum when heated to 95°C (203°F) for five minutes.

INSTALLATION

Install the thermostat into the housing.
Install a new O-ring to the housing cover and install the housing cover onto the housing.

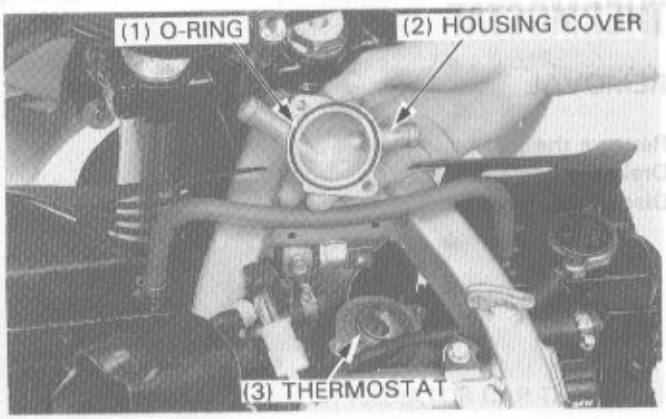

Tighten the thermostat housing cover mounting bolts.
Connect the water hoses to the housing cover.

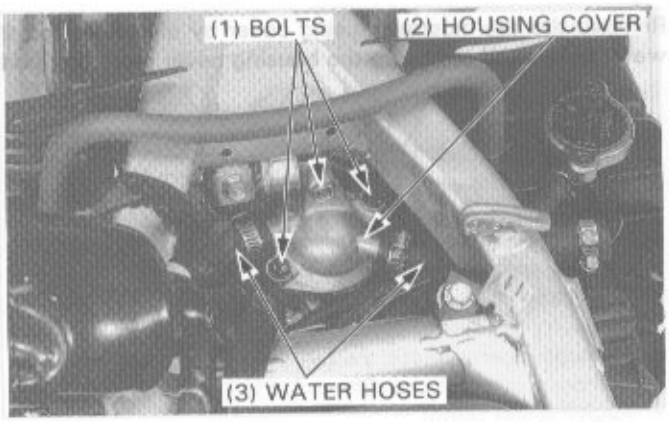

THERMOSENSOR

REMOVAL

Drain the coolant (page 5-3).
Disconnect the wire from the thermosensor.
Remove the thermosensor.
Suspend the thermosensor in 50/50 mixture of distilled water and ethylene glycol.
Heat the water gradually and measure the resistance.

NOTE

- If the thermosensor touches the pan, you'll get a false reading.

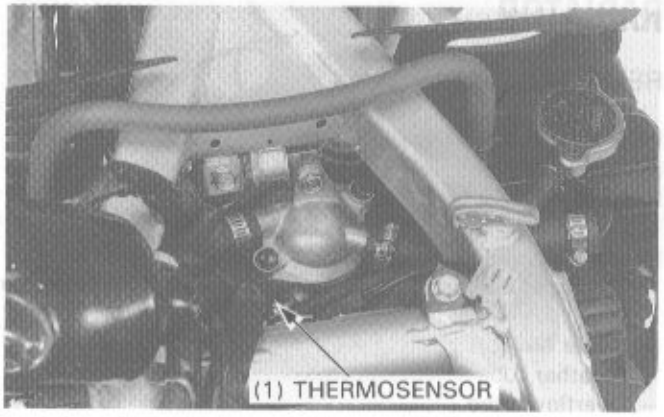

Data:

Temperature (°C/°F)	50/122	80/176	120/248
Resistance (Ω)	153.9	51.9	16.1

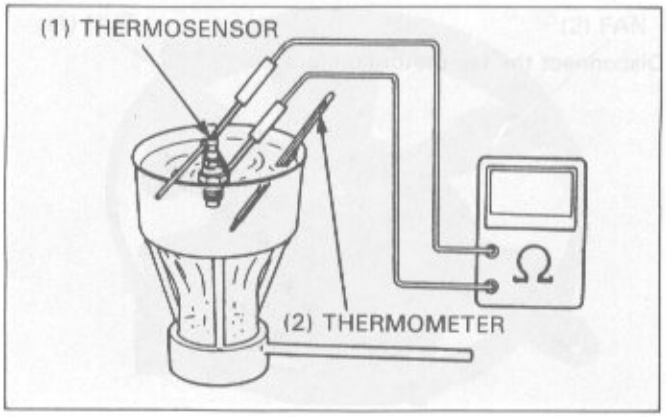

INSTALLATION

Apply sealant to the threads of the thermosensor and tighten the thermosensor to the thermostat housing.

NOTE

- Do not apply sealant to the area 2—3 mm from the end of the threads of the sensor.

Connect the thermosensor wire to the thermosensor.
Fill the cooling system (page 5-3).

THERMOSTATIC SWITCH

The thermostatic switch senses the temperature of the radiator coolant.
The fan motor comes on at 98°—102°C (208°—216°F) and stops at below 93°—97°C (199°—207°F).

Remove the radiator cap and check the coolant level.
In case the fan motor does not move, disconnect the connectors from the thermostatic switch and jump the connectors using a jumper wire.
If the fan motor moves with the ignition switch "ON", the thermostatic switch is faulty.

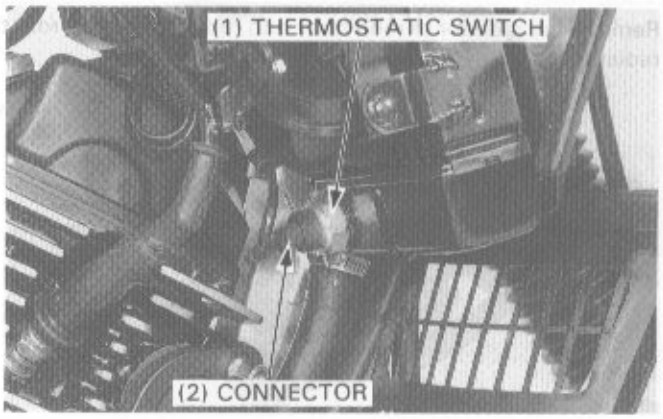

INSPECTION

Remove the thermostatic switch and suspend it in 50/50 mixture of distilled water and ethylene glycol.
Heat the coolant gradually and check the thermostatic switch for continuity at 98°—102°C (208°—216°F).
Cool the heated coolant gradually and check the thermostatic switch for no continuity at 93°—97°C (199°—207°F).
Apply sealant to the switch thread and install it.

TORQUE: 18 N·m (1.8 kg-m, 13 ft-lb)

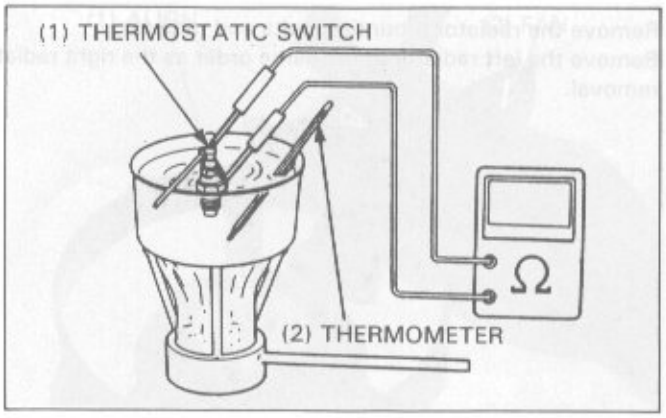

RADIATOR

REMOVAL

Drain the coolant (page 5-3).
Remove the side cowling (page 12-2).
Remove the fuel tank (page 4-3).

Remove the following components from the right radiator.
- Thermostatic switch and thermosensor connectors (page 5-5)
- Water hoses
- Breather tube
- Overflow tube
- Air cleaner

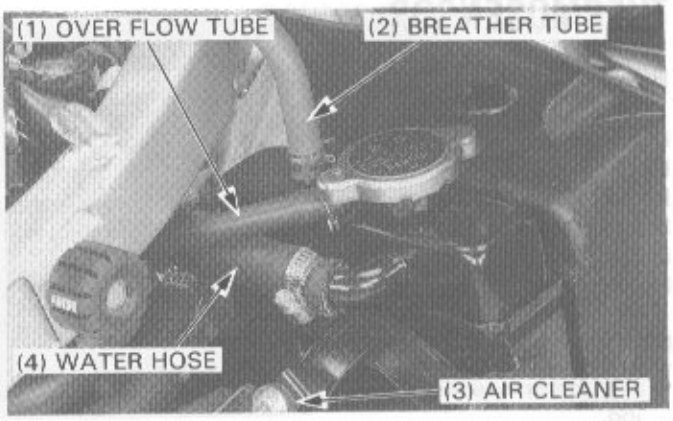

Disconnect the fan motor connector.

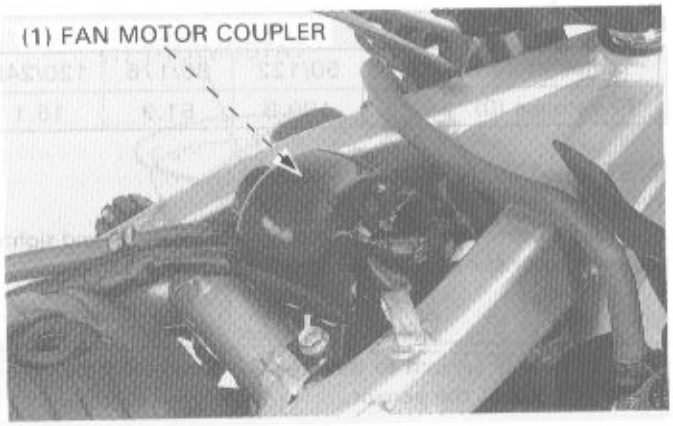

Remove the radiator shroud bolts and radiator shroud from the radiator.

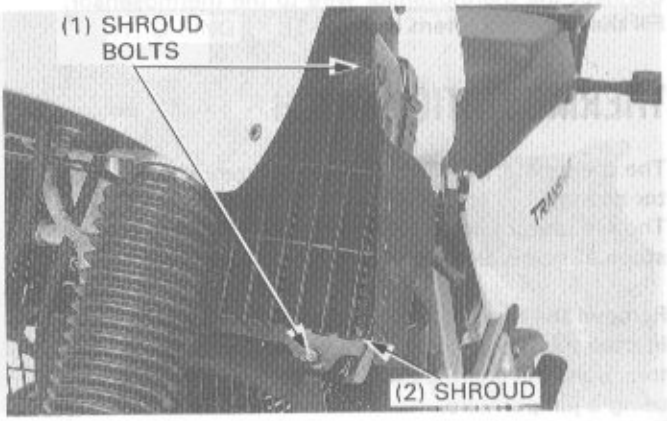

Remove the radiator mounting bolts and radiator.
Remove the left radiator in the same order as the right radiator removal.

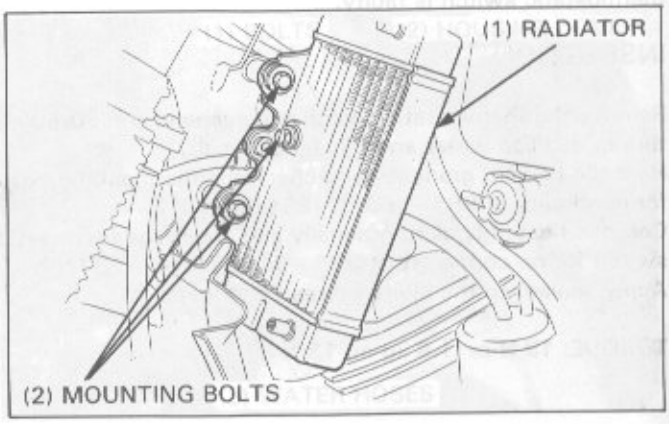

DISASSEMBLY

Remove the fan motor shroud mounting bolts, and remove the fan motor shroud and fan motor as an assembly.

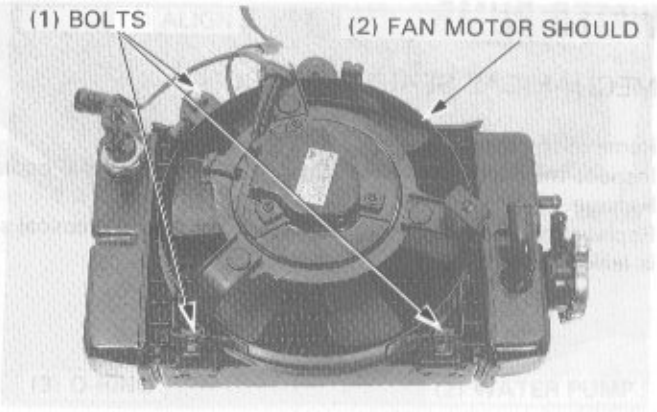

Remove the nut and fan.

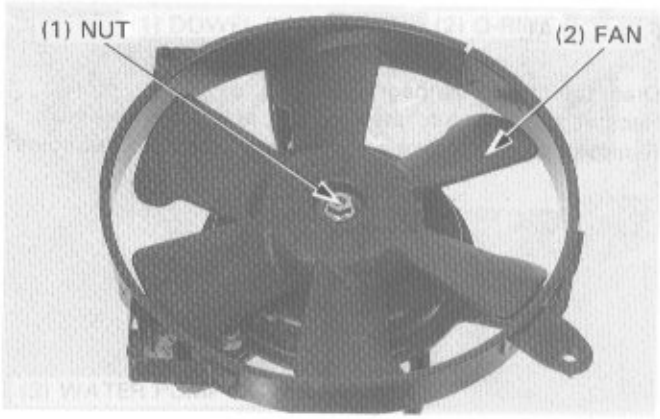

Remove the fan motor mounting nuts and fan motor from the fan motor shroud.

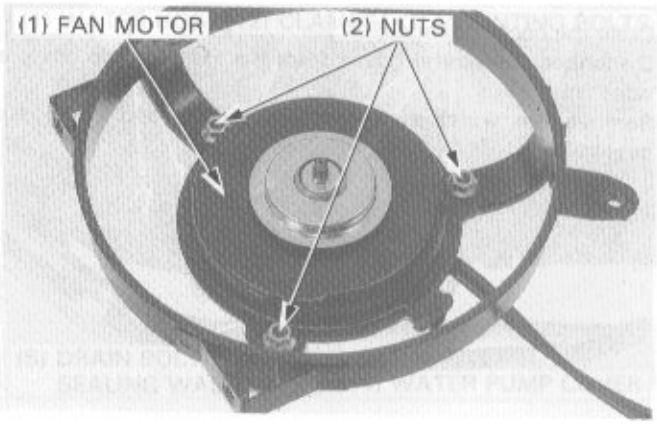

ASSEMBLY

Check each part for damage.
Install the fan to the fan motor shaft, aligning the boss of the shaft with the groove of the fan.

Assemble the remaining components in the reverse order of the disassembly.

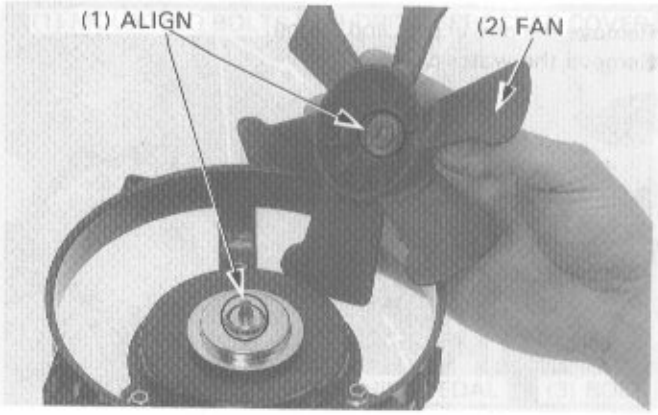

WATER PUMP

MECHANICAL SEAL INSPECTION

Remove the lower cowling (page 12-3).
Inspect the telltale hole for signs of mechanical seal coolant leakage.
Replace the water pump as an assembly if the mechanical seal is leaking.

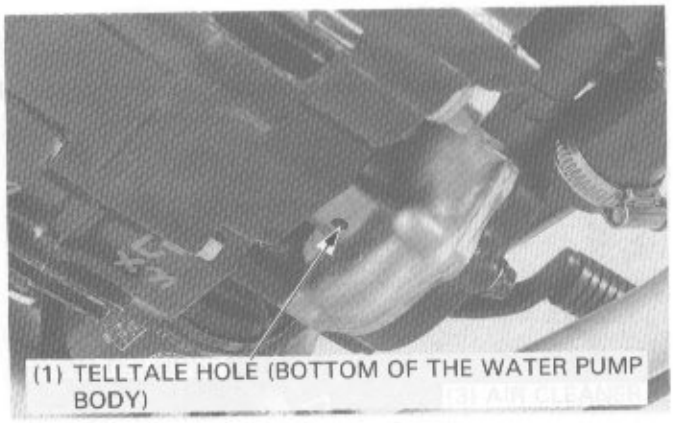

REMOVAL

Drain the engine oil (page 2-3).
Remove the gearshift retaining bolt and gearshift pedal.
Remove the two mounting bolts and drive sprocket cover.

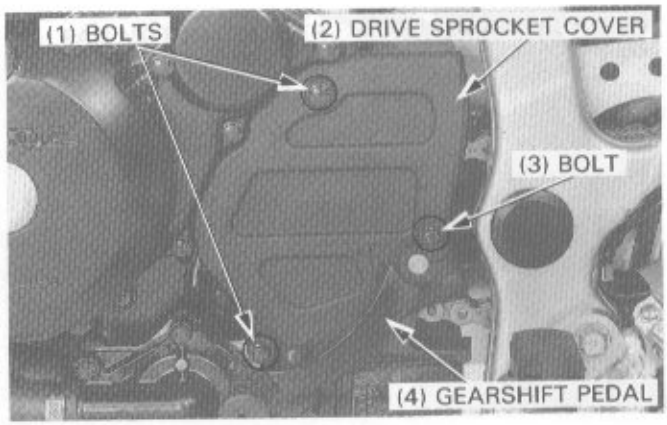

Drain the coolant (page 5-3).
Disconnect the water hoses from the water pump cover and water pump.
Remove the water pump mounting bolts and water pump cover.

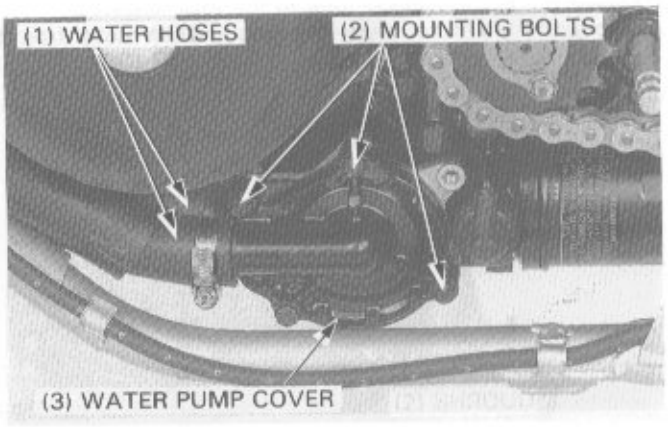

Remove the dowel pins and O-ring.
Remove the water pump.

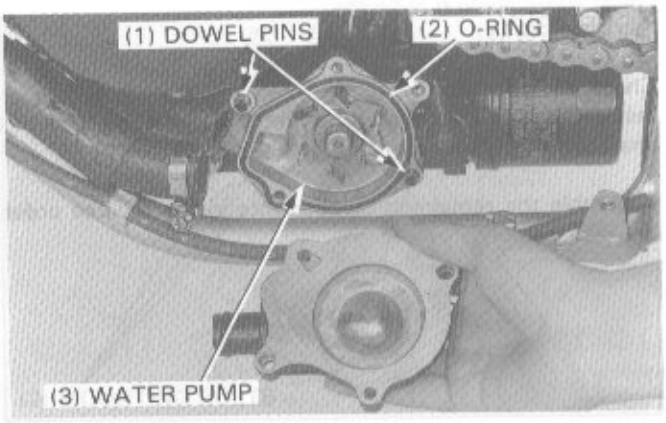

INSTALLATION

Install a new O-ring on the water pump.
Install the water pump, aligning the boss of the oil pump shaft with the groove of the water pump shaft.

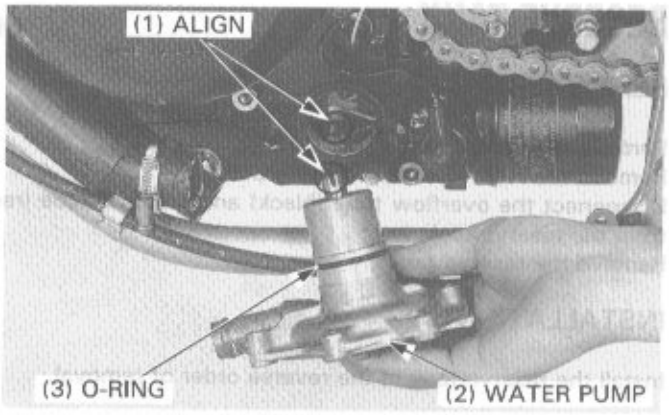

Install the dowel pins and a new O-ring to the water pump.
Install the water pump cover onto the water pump.

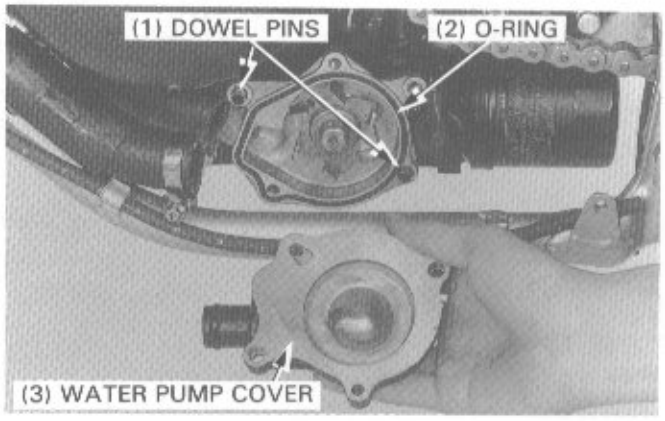

Tighten the water pump mounting bolts with the wire clamp.
Tighten the drain bolt with the sealing washer.
Connect the water hoses to the water pump and water pump cover, and install and tighten the water pipe clamps.

Fill the radiator with coolant (page 5-3).
Fill the engine with the recommended engine oil (page 2-3).
Check the cooling system for leakage.

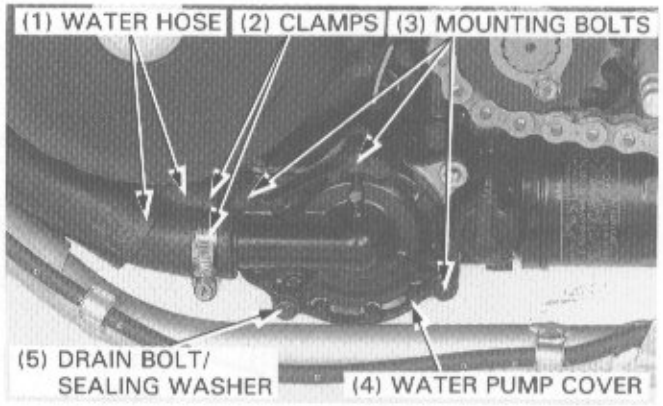

Install the drive sprocket cover and gearshift pedal.

TORQUE:
Gearshift pedal: 10 N·m (1.0 kg-m, 7 ft-lb)

Install the lower cowling (page 12-3).

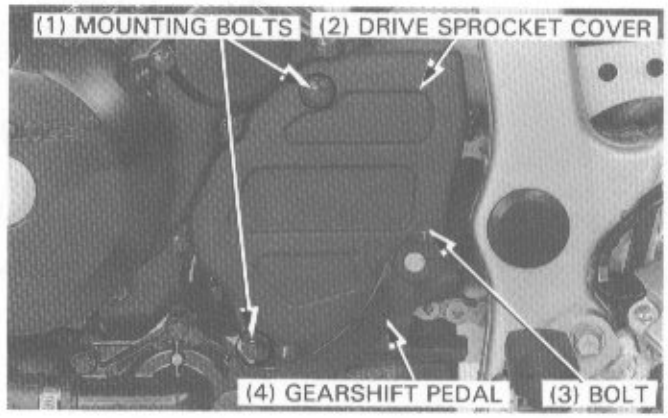

RESERVE TANK

REMOVAL

Remove the starter motor (page 18-3).
Remove the reserve tank mounting bolt.
Disconnect the overflow tube (black) and breather tube (red) from the reserve tank.
Remove the reserve tank.

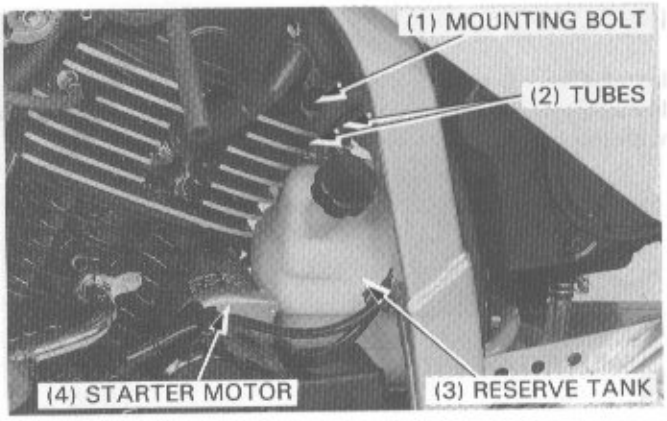

INSTALLATION

Install the reserve tank in the reverse order of removal.

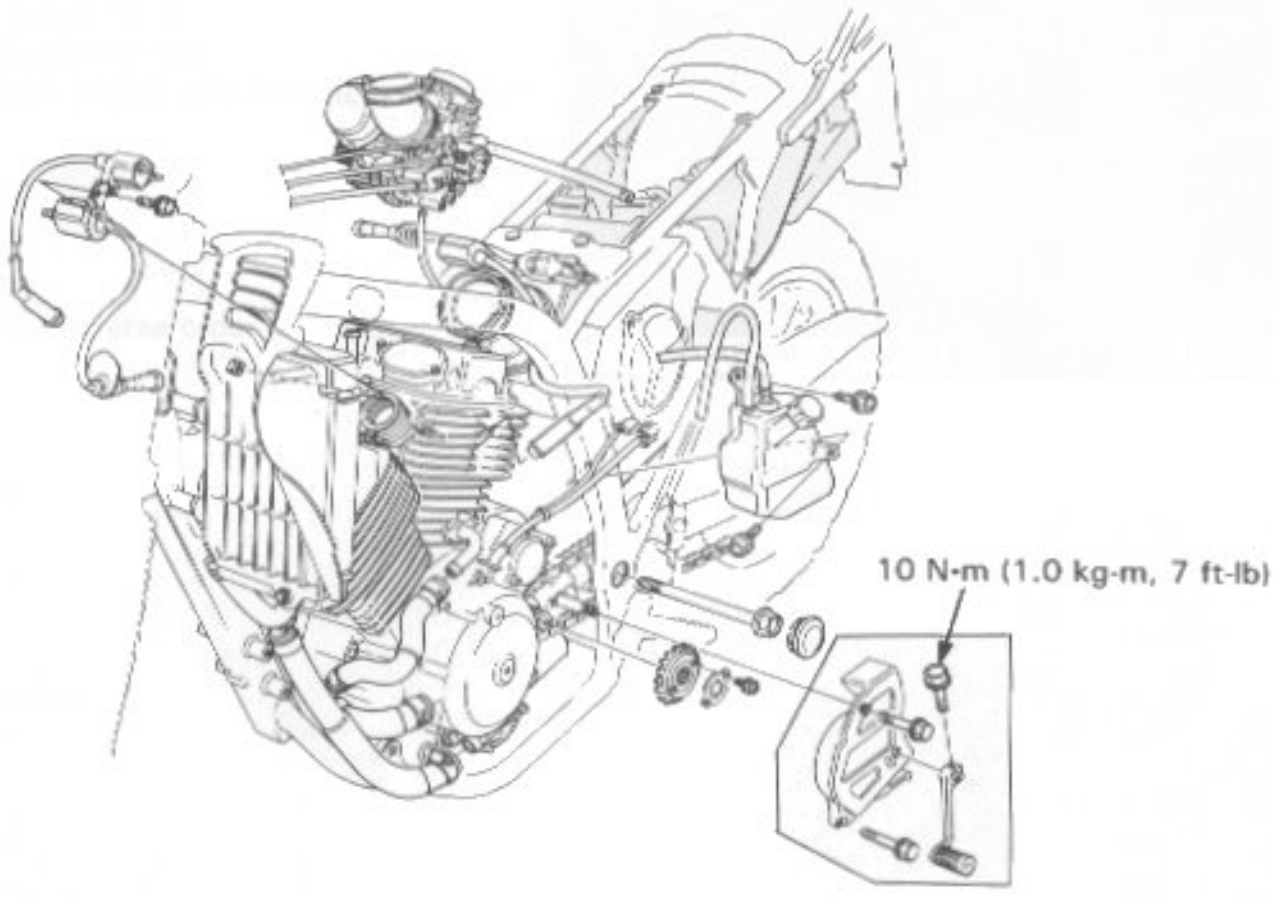
10 N·m (1.0 kg-m, 7 ft-lb)

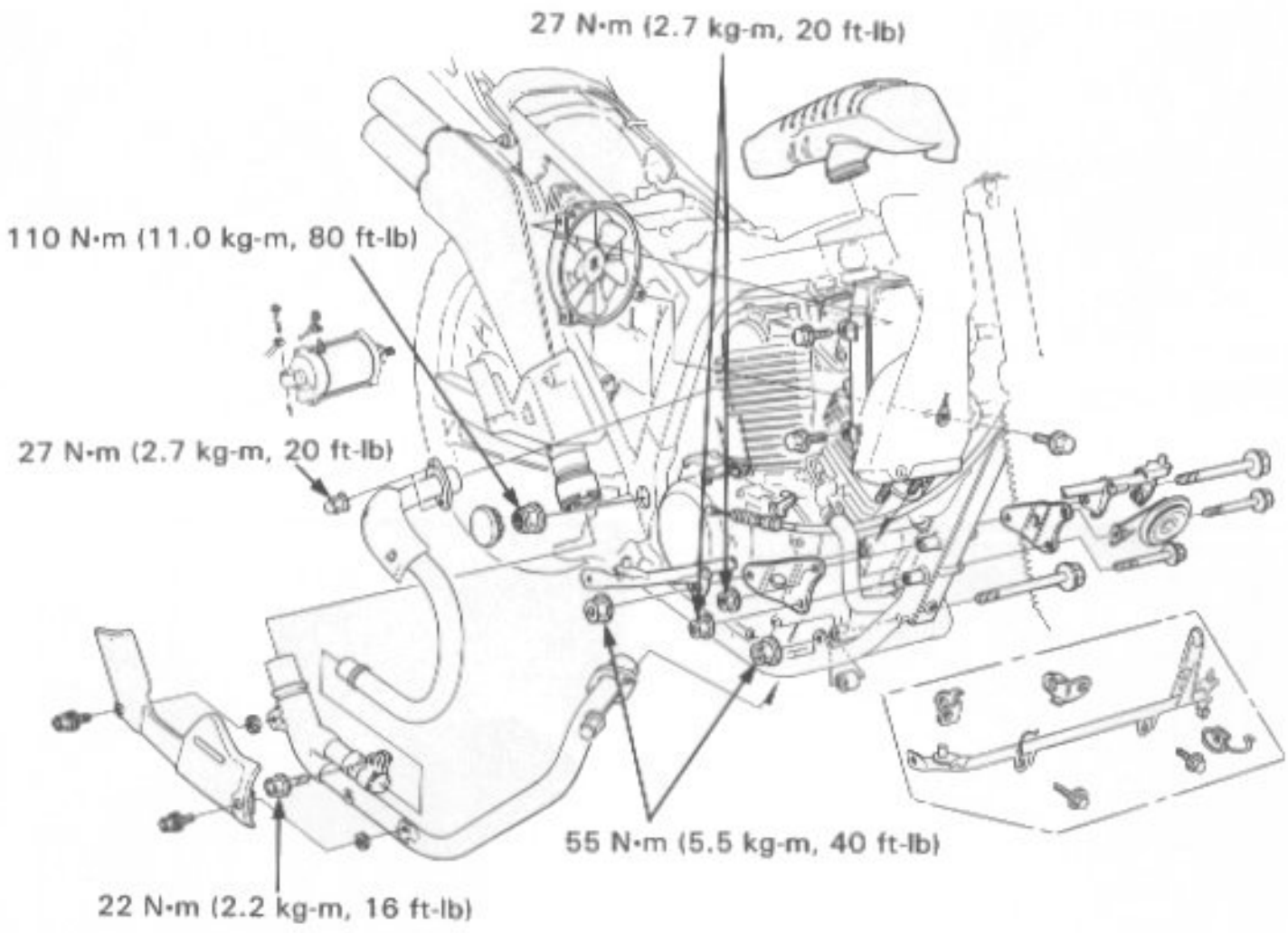
27 N·m (2.7 kg-m, 20 ft-lb)
110 N·m (11.0 kg-m, 80 ft-lb)
27 N·m (2.7 kg-m, 20 ft-lb)
55 N·m (5.5 kg-m, 40 ft-lb)
22 N·m (2.2 kg-m, 16 ft-lb)

6. ENGINE REMOVAL/INSTALLATION

SERVICE INFORMATION	6-1	ENGINE INSTALLATION	6-2
ENGINE REMOVAL	6-2		

SERVICE INFORMATION

GENERAL

CAUTION

- *Do not jack up the motorcycle by putting the jack under the oil filter.*

- During removal and installation, support the frame with suitable stay.
- Parts requiring engine removal for servicing:

Oil pump	Section 2
Cylinder head	Section 9
Cylinder/Piston	Section 10
Crankshaft/Transmission	Section 11

SPECIFICATIONS

Engine dry weight	59.5 kg (131.17 lb)
Oil capacity	2.2 lit (2.32 US qt, 1.94 Imp qt) after draining
	2.8 lit (2.96 US qt, 2.46 Imp qt) after disassembly

TORQUE VALUES

Swingarm/engine pivot nut	110 N·m (11.0 kg-m, 80 ft-lb)
Engine mounting nut (upper/lower)	55 N·m (5.5 kg-m, 40 ft-lb)
Engine bracket nut	27 N·m (2.7 kg-m, 20 ft-lb)
Gearshift pedal bolt	10 N·m (1.0 kg-m, 7 ft-lb)

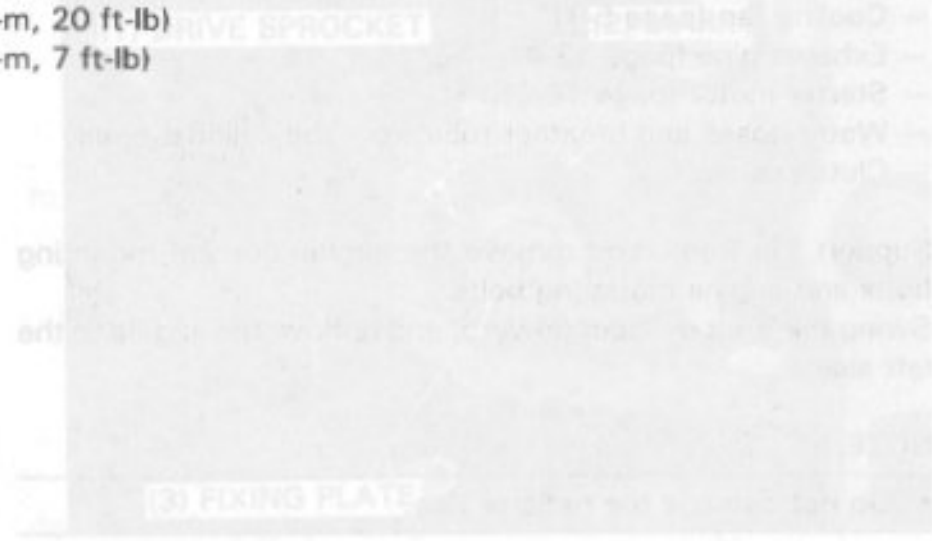

ENGINE REMOVAL

CAUTION

- *Do not jack up the motorcycle by putting the jack under the oil filter.*

Drain the oil from the engine (page 2-3).
Drain the coolant from the system (page 5-3).

Remove the following components:
- Side and lower cowlings (page 12-3).
- Fuel tank (page 4-3).
- Air duct (page 4-7) and carburetor (page 4-8).
- Drive sprocket cover (page 5-8) and drive sprocket.
- Water hoses from the water pump and cylinder.
- Alternator and neutral switch wire connectors (page 8-2).
- Spark plug caps from the spark plugs.
- Reserve tank mounting bolts and reserve tank by swing reward (page 5-10).
- Front ignition coil with the stay (page 17-5).
- Canister and PCV (California model).

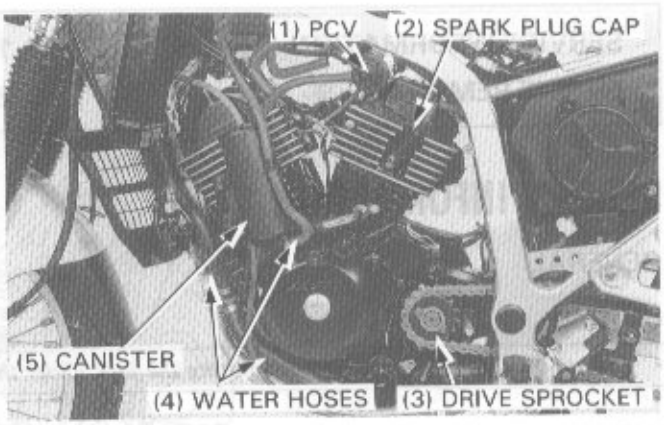

- Cooling fan (page 5-7).
- Exhaust pipe (page 12-4).
- Starter motor (page 18-3).
- Water hoses and breather tube from the cylinder head.
- Clutch cable.

Support the frame and remove the engine bracket mounting bolts and engine mounting bolts.
Swing the front cylinder upward, and remove the engine to the left side.

NOTE

- Do not damage the radiator fins.

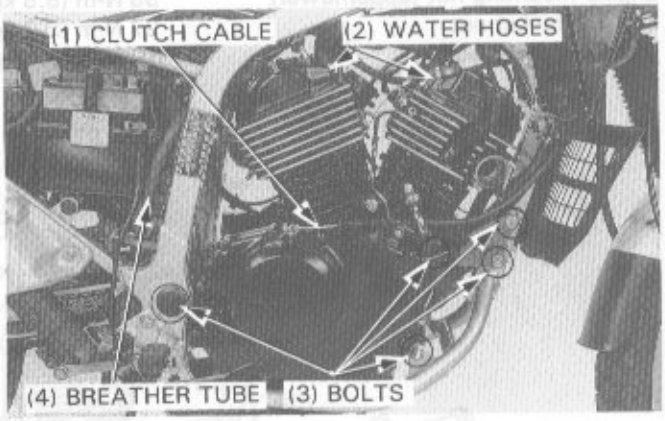

ENGINE INSTALLATION

NOTE

- Insert all the engine pivot bolt and engine bracket bolts from the left side.
- Install the lower engine mounting bolts with the collar.
- Install the upper engine mounting bolt with the cowling stay.

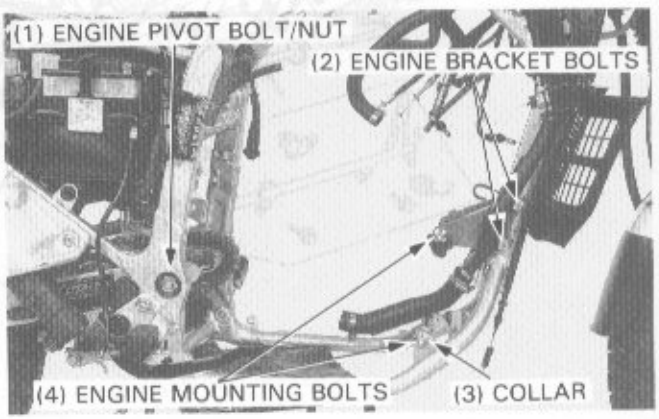

Install the engine from the left side.

NOTE

- Do not damage the radiator fins.

Insert the engine pivot bolt through the swingarm and the engine from the left side, and install the nut; but do not tighten it yet.

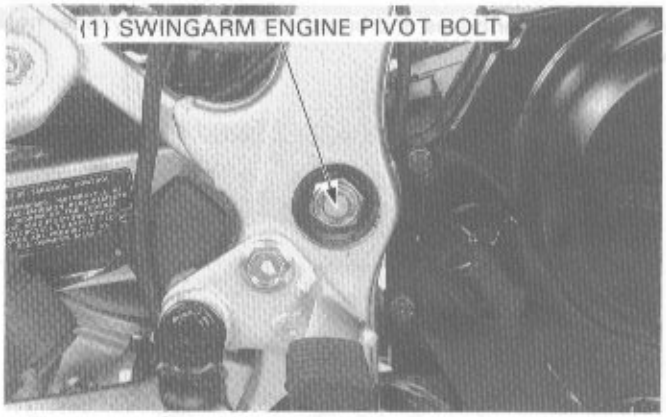

Install the engine brackets, cowling stay, engine bracket bolts and engine mounting bolts.

Install and tighten each nut.

TORQUE:

Swingarm engine pivot nut
110 N·m (11.0 kg-m, 80 ft-lb)
Engine mounting nuts (upper/lower)
55 N·m (5.5 kg-m, 40 ft-lb)
Engine bracket nuts
27 N·m (2.7 kg-m, 20 ft-lb)

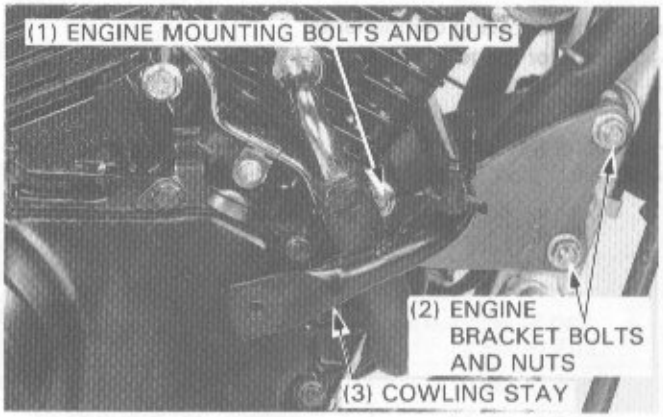

Install the drive sprocket with its marked side facing out.

Install the fixing plate and tighten the bolts securely.

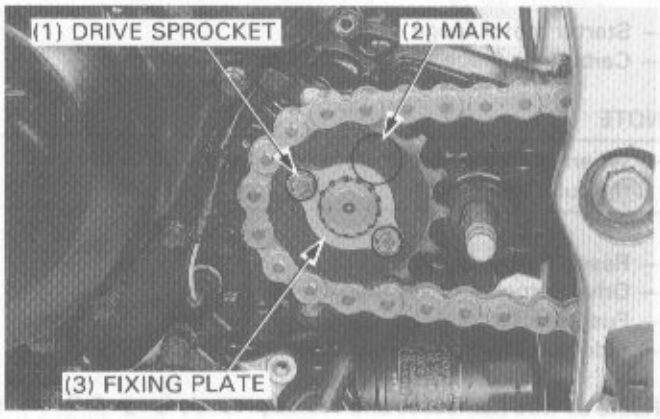

Install the water hoses securely with the clamps.

Install the following components:
– Front ignition coils with the stay.
– Spark plug caps.
– Canister and PCV (California model).

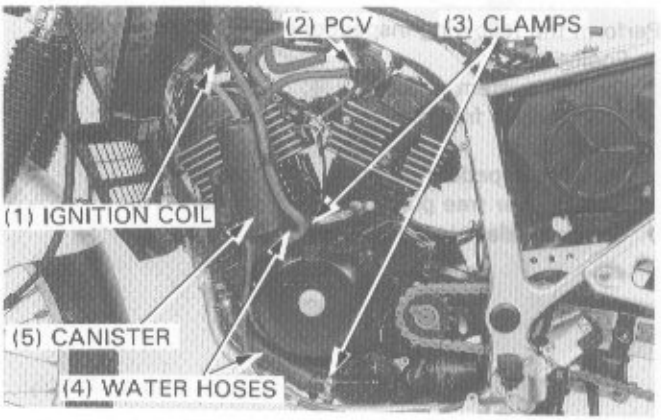

Install the water hoses and breather tube to the cylinder head with the clmaps.

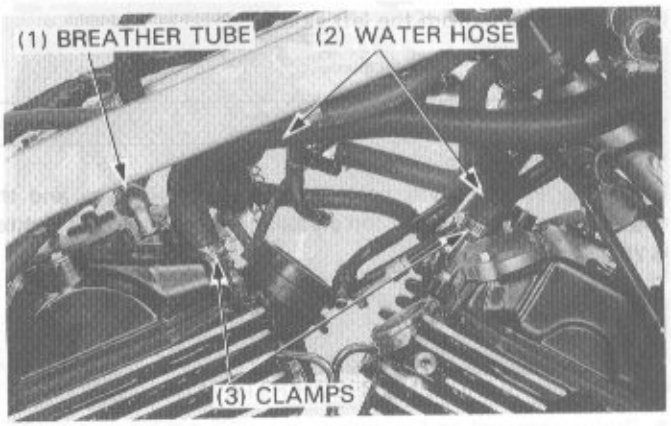

Install the following components:
- Alternator (page 16-8) and neutral switch connectors.
- Clutch cable.

- Cooling fan (page 5-7).
- Exhaust pipe (page 12-4).

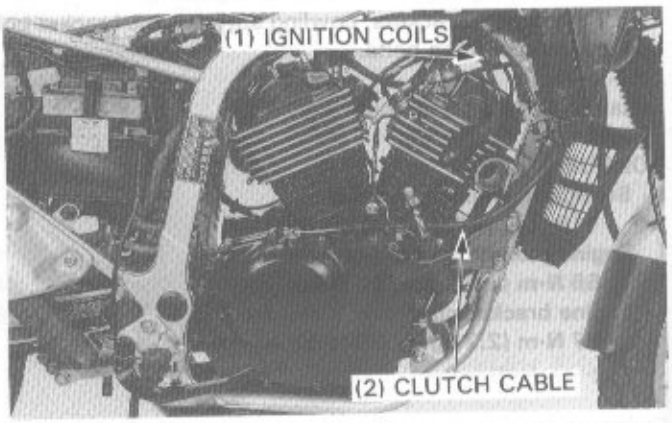

- Starter motor (page 18-6).
- Carburetor (page 4-16) and air duct (page 4-8).

NOTE

- When installing the air duct band, apply oil to the inside of the tube band.

- Reserve tank (page 5-10).
- Drive sprocket cover (page 5-9).
- Fuel tank (page 4-3).
- Side and lower cowlings (page 12-3).

Route all wire harnesses and cables properly (page 1-9 through 1-13).

Perform the following inspections and adjustments:

Engine oil	(page 2-3)
Cooling system	(page 5-3)
Throttle grip free play	(page 3-4)
Drive chain	(page 3-11)
Rear brake pedal free play	(page 3-14)
Clutch lever free play	(page 3-15)

Check all electrical equipment.

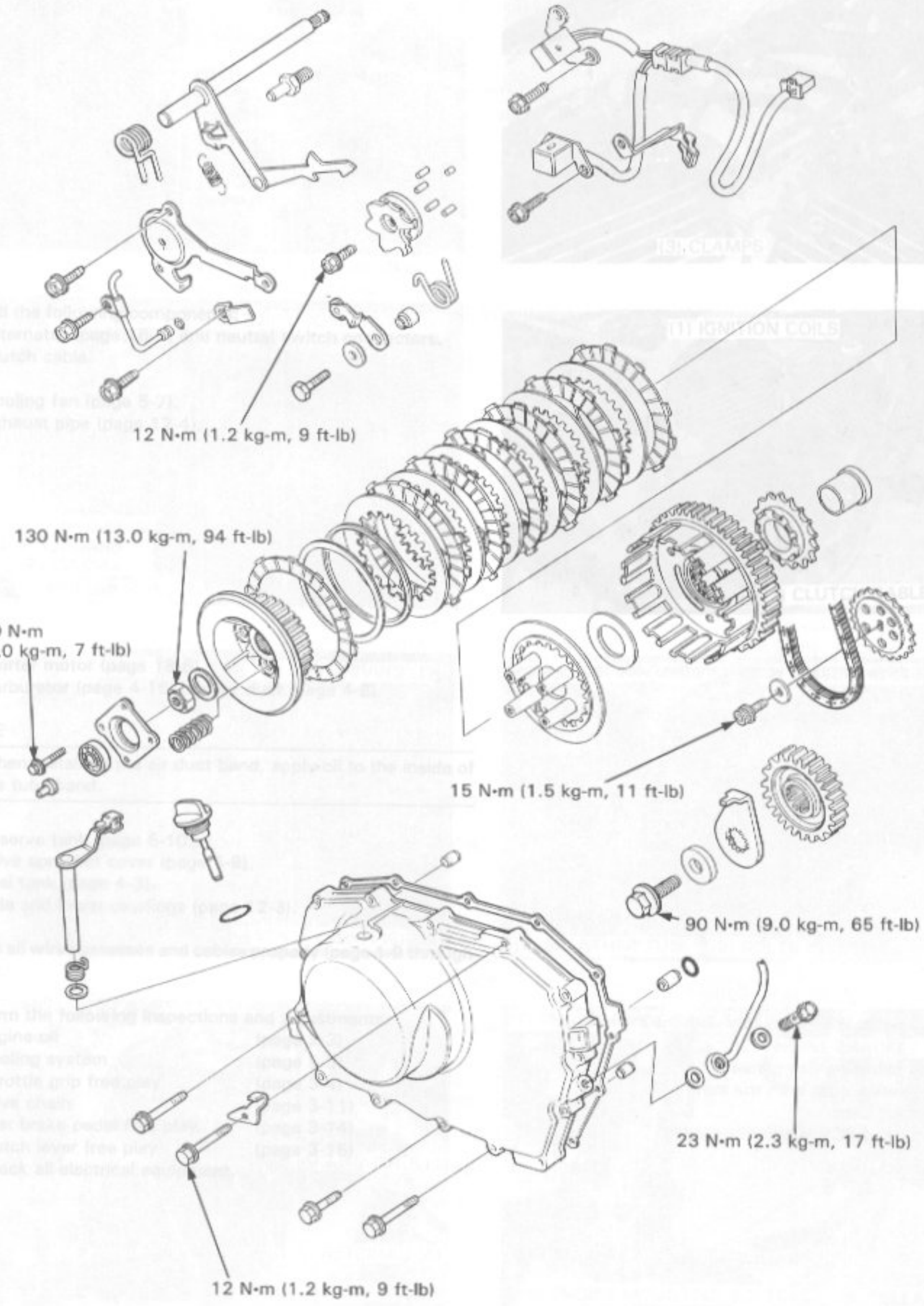
12 N·m (1.2 kg-m, 9 ft-lb)
130 N·m (13.0 kg-m, 94 ft-lb)
10 N·m
(1.0 kg-m, 7 ft-lb)
15 N·m (1.5 kg-m, 11 ft-lb)
90 N·m (9.0 kg-m, 65 ft-lb)
23 N·m (2.3 kg-m, 17 ft-lb)
12 N·m (1.2 kg-m, 9 ft-lb)

7. CLUTCH/GEARSHIFT LINKAGE

SERVICE INFORMATION	7-1	PRIMARY DRIVE GEAR	7-9
TROUBLESHOOTING	7-2	CLUTCH INSTALLATION	7-11
RIGHT CRANKCASE COVER REMOVAL	7-3	RIGHT CRANKCASE COVER INSTALLATION	7-13
CLUTCH REMOVAL	7-4		
GEARSHIFT LINKAGE	7-8		

SERVICE INFORMATION

GENERAL

- This section covers the removal and installation of the clutch, gearshift linkage and primary drive gear. All these operations can be done with the engine installed in the frame.
- Coat new clutch discs with clean engine oil before reassembly.

SPECIFICATIONS

mm (in)

ITEM			STANDARD	SERVICE LIMIT
Clutch	Spring free length		39.0 (1.54)	37.4 (1.47)
	Spring preload/length		26.2—24.2/26.25 kg/mm (57.76—53.35/1.033 lb/in)	—
	Disc thickness		2.92—3.08 (0.115—0.121)	2.60 (0.102)
	Plate warpage		—	0.30 (0.012)
	Outer guide	I.D.	21.991—22.016 (0.8658—0.8668)	22.09 (0.870)
		O.D.	31.959—31.975 (1.2582—1.2589)	31.98 (1.259)
	Outer I.D.		32.000—32.025 (1.2598—1.2608)	32.10 (1.264)
Oil pump drive sprocket I.D.			32.000—32.025 (1.2598—1.2608)	32.10 (1.264)
Mainshaft O.D. at clutch outer guide			21.967—21.980 (0.8648—0.8654)	21.92 (0.863)

TORQUE VALUES

Drum stopper plate mounting bolt	12 N·m (1.2 kg-m, 9 ft-lb)
Primary drive gear mounting bolt	90 N·m (9.0 kg-m, 65 ft-lb)
Oil pump driven sprocket bolt	15 N·m (1.5 kg-m, 11 ft-lb)
Clutch lock nut	130 N·m (13.0 kg-m, 94 ft-lb)
Clutch lifter plate bolt	10 N·m (1.0 kg-m, 7 ft-lb)
Gearshift pedal bolt	10 N·m (1.0 kg-m, 7 ft-lb)
Oil pass pipe bolt (8 mm)	23 N·m (2.3 kg-m, 17 ft-lb)
Crankcase cover bolt	12 N·m (1.2 kg-m, 9 ft-lb)

TOOLS

Special

Clutch center holder	07923—KE10000 or 07HGB—001000A (U.S.A. only)

Common

Lock nut wrench, 17 x 27 mm	07716—0020300
Extention bar	07716—0020500
Gear holder	07724—0010100

Not available in U.S.A.

TROUBLESHOOTING

Faulty clutch operation can usually be corrected by adjusting the clutch lever free play.

Clutch slips when accelerating
- No free play
- Discs worn
- Springs weak

Clutch will not disengage
- Too much free play
- Plates warped

Motorcycle creeps with clutch disengaged
- Too much free play
- Plates warped

Excessive lever pressure
- Clutch cable kinked, damaged or dirty
- Lifter machanism damaged

Clutch operation feels rough
- Clutch outer slots rough
- Dirty clutch cable

RIGHT CRANKCASE COVER REMOVAL

Drain the engine oil (page 2-3).
Remove the exhaust pipe and muffler (page 12-4).

Remove the oil pipe bolt and sealing washers.
Remove the right crankcase cover mounting bolts and disconnect the clutch cable from the clutch lifter arm.
Remove the right crankcase cover.

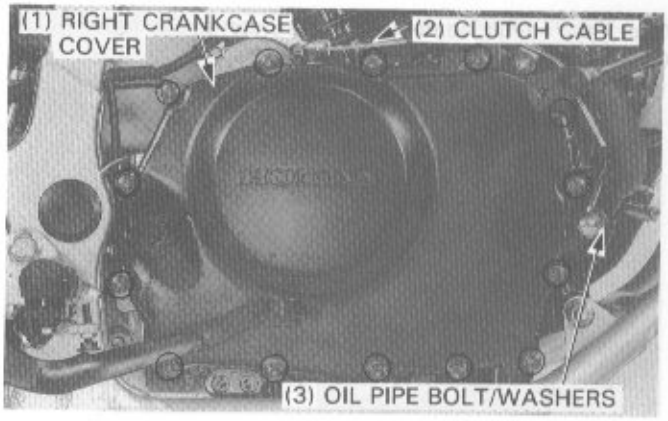

Remove the gasket and dowel pins.

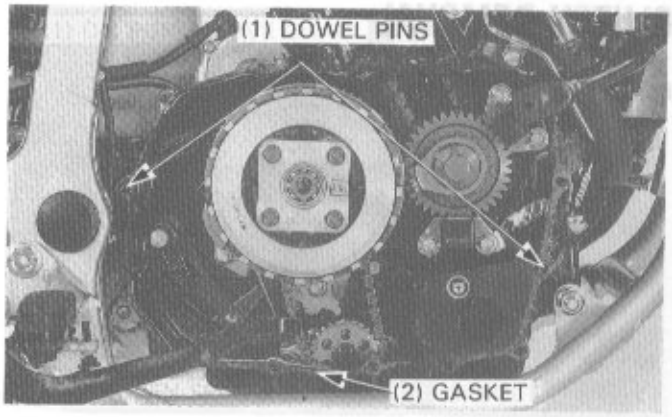

Remove the oil orifice.

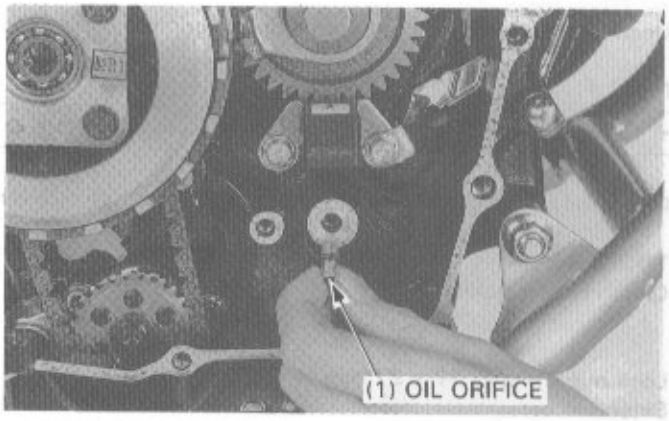

RIGHT CRANKCASE COVER INSPECTION

Remove the clutch lifter piece, clutch lifter arm shaft and spring from the right crankcase cover.

Check the clutch lifter piece and clutch lifter arm shaft for damage or excessive scratches.
Check the spring for damage.

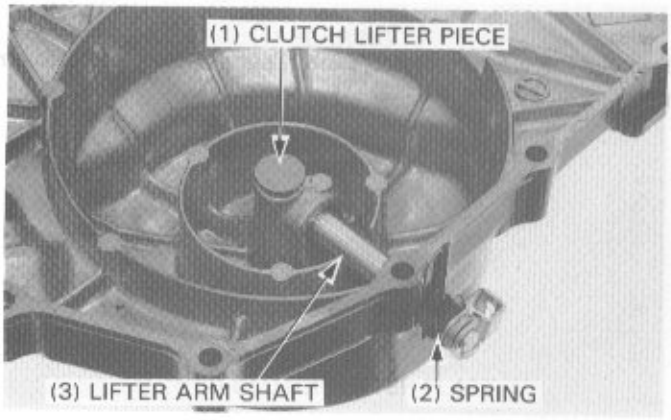

Check the needle bearings for wear, damage or loose fit.
Check the oil seal for damage.

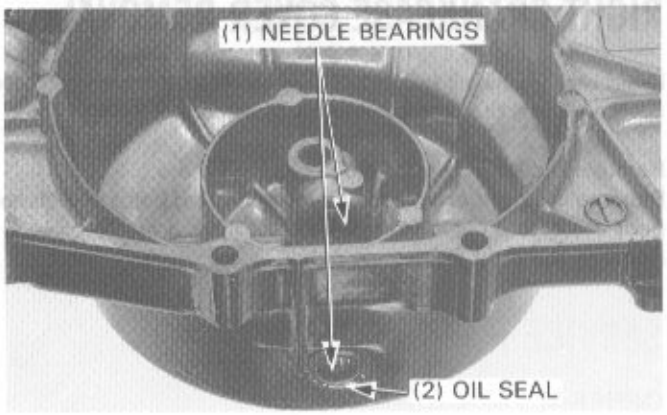

CLUTCH REMOVAL

Remove the clutch bolts, lifter plate and springs.

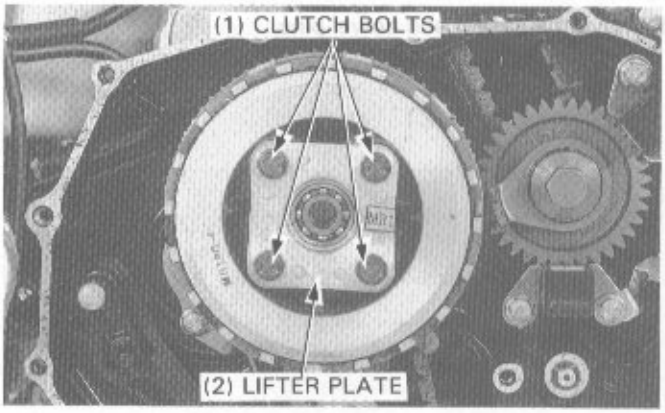

Unstake the clutch lock nut with a drill or grinder.

NOTE

- Be careful not to damage the shaft threads.

Install the clutch center holder and remove the clutch lock nut.

TOOLS:

Clutch center holder	**07923—KE10000 or 07HGB—001000A (U.S.A. only)**
Lock nut wrench, 17 x 27 mm	**07716—0020300**
Extention bar	**07716—0020500 Not available in U.S.A.**

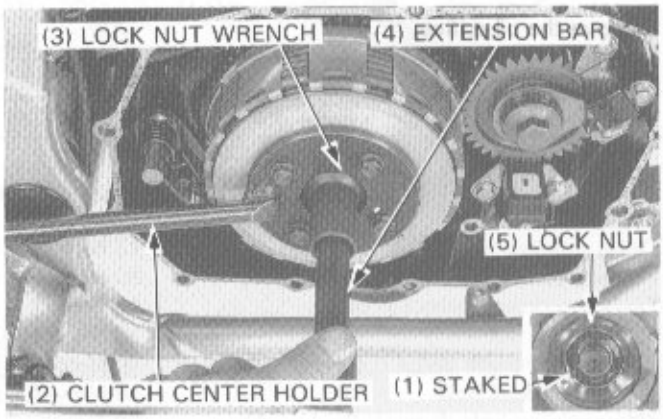

Remove the washer, clutch center, plates, discs and pressure plate as an assembly.

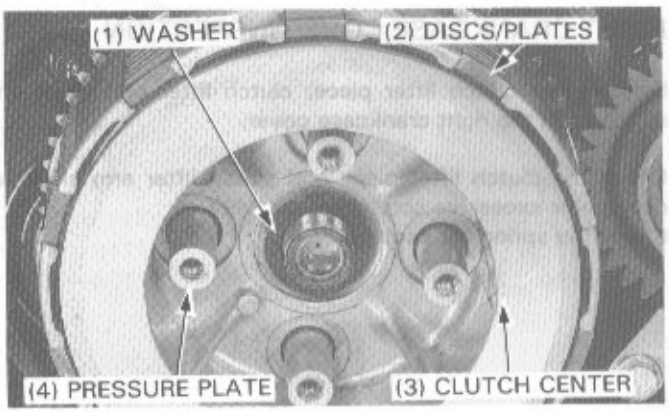

Remove the thrust washer and clutch outer.

Remove the oil pump driven sprocket bolt, driven sprocket, oil pump drive chain and oil pump drive sprocket.

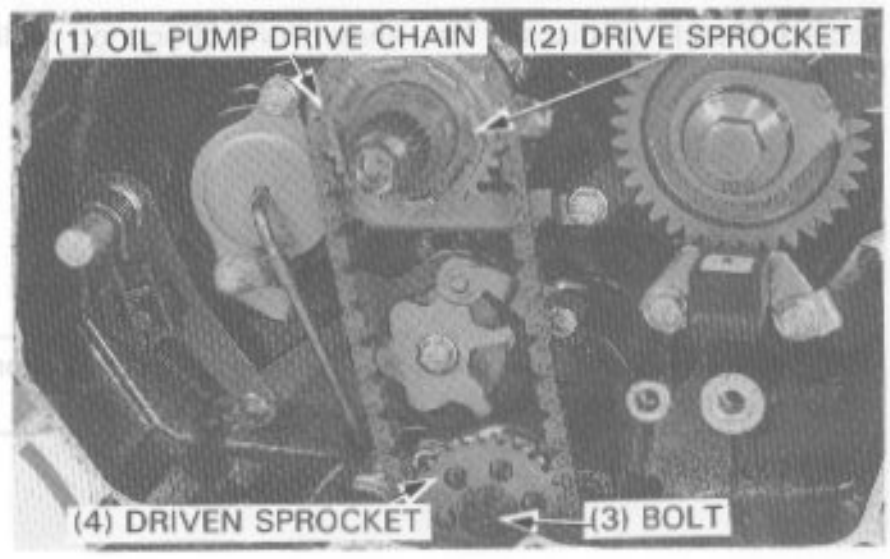

Remove the clutch outer guide from the mainshaft.

INSPECTION

Check the bearing lifter plate for damage.
Turn the bearing inner race with your finger.
The bearing should turn smoothly and quietly.
Also check that the bearing outer race fits tightly in the clutch lifter plate.
Replace the bearing or lifter plate with a new one if necessary.

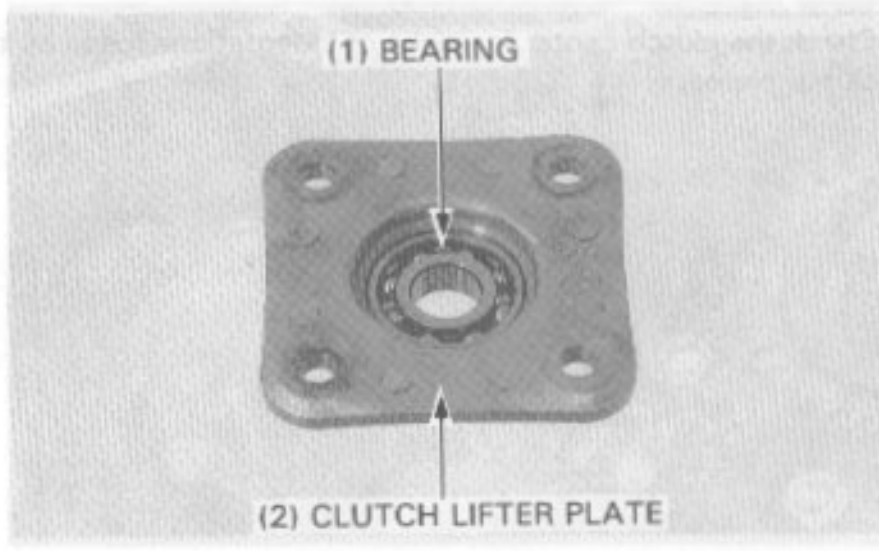

Measure the spring free length.

SERVICE LIMIT: 37.4 mm (1.47 in)

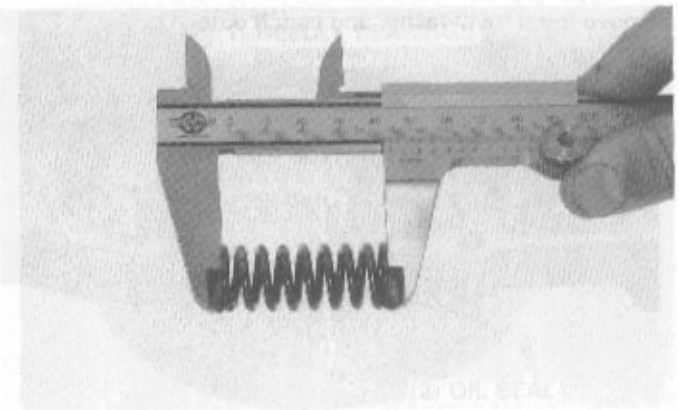

Replace the clutch discs if they show signs of scoring or discoloration.

Measure the thickness of the disc A and B.

SERVICE LIMIT: 2.60 mm (0.102 in)

NOTE

- Replace the discs and plates as a set if any one is beyond the service limit.

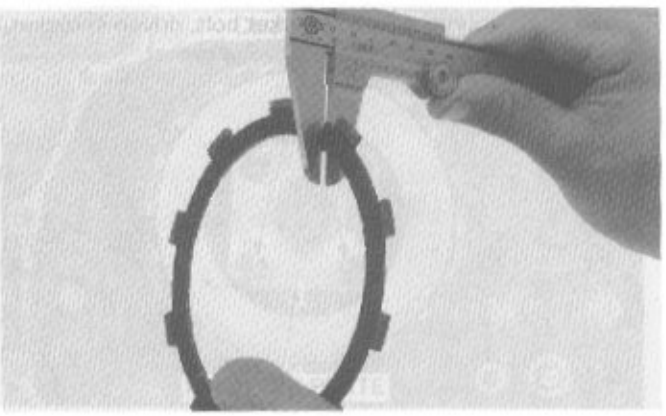

Check the plate warpage on the surface of the plate using a thickness gauge.

SERVICE LIMIT: 0.30 mm (0.012 in)

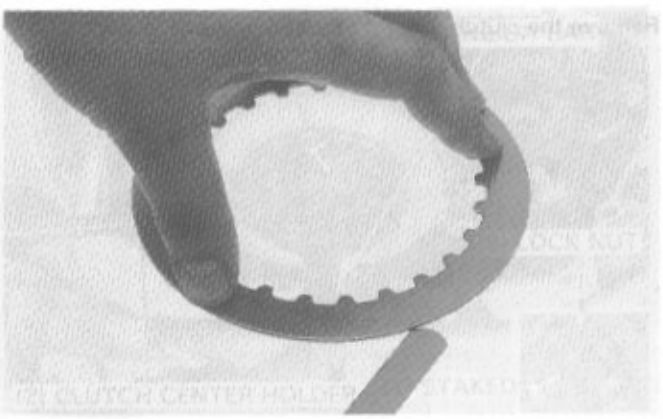

Check the clutch center for nicks or indentations made by the clutch plates.

Check the spring seat and judder spring for distortion, wear or damage.
Replace them if necessary.

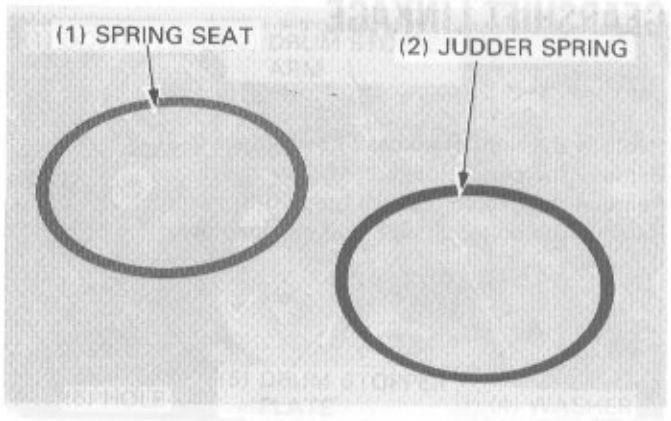

Check the slots in the clutch outer for nicks or indentations made by clutch discs.

Check the oil pump drive sprocket for damage.

Measure the I.D. of the clutch outer and I.D. of the oil pump drive sprocket.

SERVICE LIMITS:

Clutch outer I.D.:	**32.10 mm (1.264 in)**
Oil pump drive sprocket I.D.:	**32.10 mm (1.264 in)**

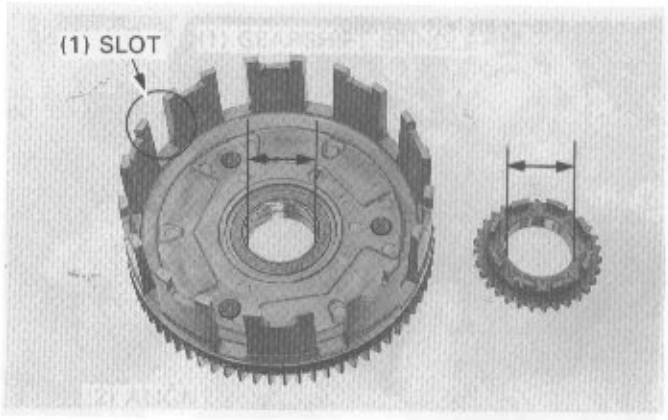

Measure the I.D. and O.D. of the clutch outer guide.

SERVICE LIMITS:
I.D.: 22.09 mm (0.870 in)
O.D.: 31.98 mm (1.259 in)

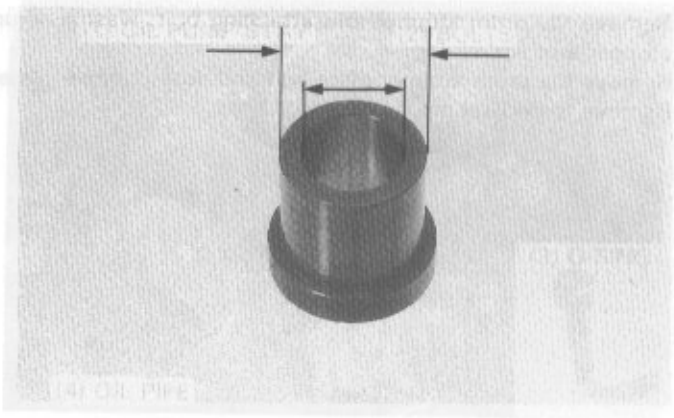

Measure the mainshaft O.D. at the clutch outer guide.

SERVICE LIMIT: 21.92 mm (0.863 in)

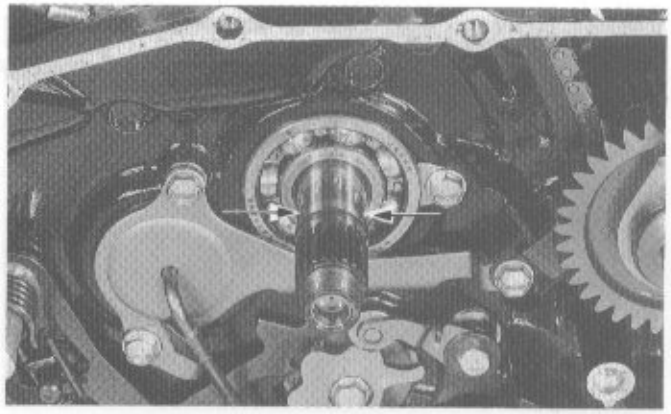

GEARSHIFT LINKAGE

REMOVAL

Remove the right crankcase cover (page 7-3).
Remove the clutch (page 7-4).
Remove the gearshift pedal (page 5-8).
Remove the bolts, oil pipe and oil pipe stay.

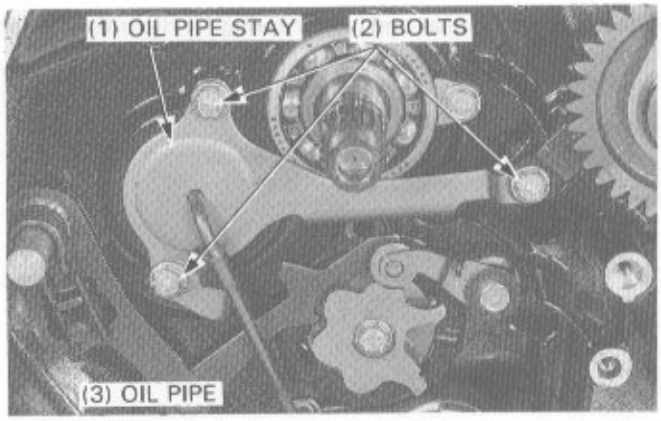

Remove the gearshift spindle.

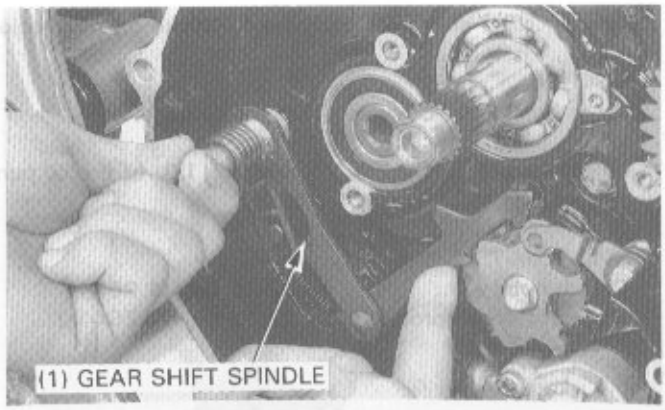

Remove the drum stopper arm attaching bolt, washer, drum stopper arm and spring.
Remove the drum stopper plate bolt and drum stopper plate.
Remove the dowel pin.

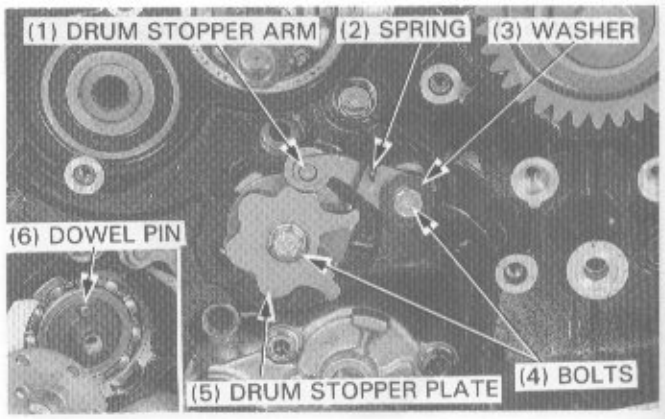

INSPECTION

Check the gearshift spindle for bending or damage.
Check the return spring for damage.

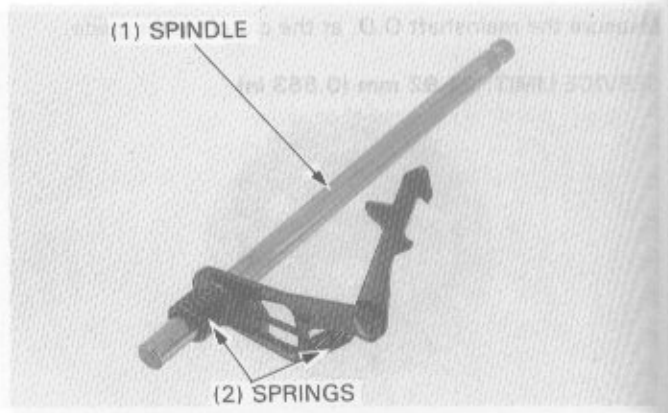

INSTALLATION

Install the dowel pin to shift drum.
Install the spring, drum stopper arm and washer, and tighten the drum stopper arm bolt.

Install the drum stopper plate, aligning the hole of the stopper plate with the dowel pin.
Apply locking agent to the threads of the stopper plate mounting bolt and tighten it to the specified torque.

TORQUE: 12 N·m (1.2 kg-m, 9 ft-lb)

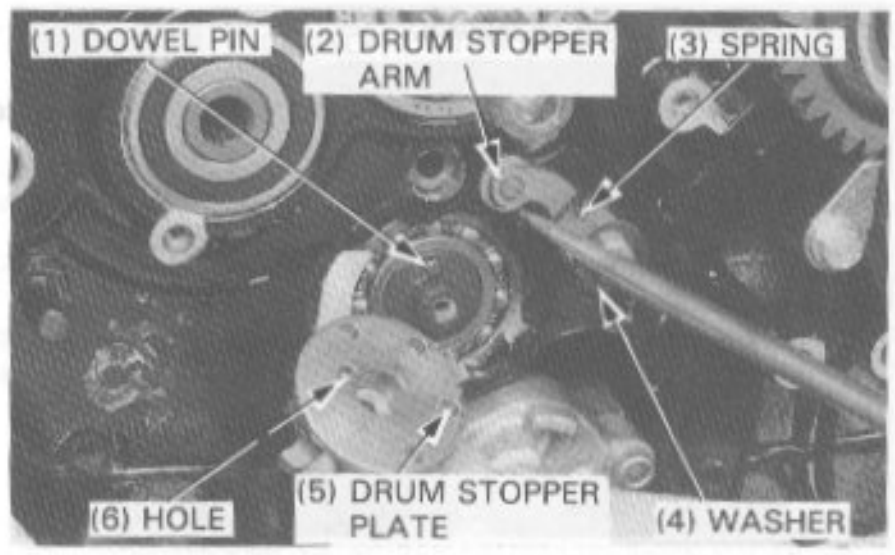

Install the gearshift spindle, aligning the return spring ends with the gearshift spindle return pin.

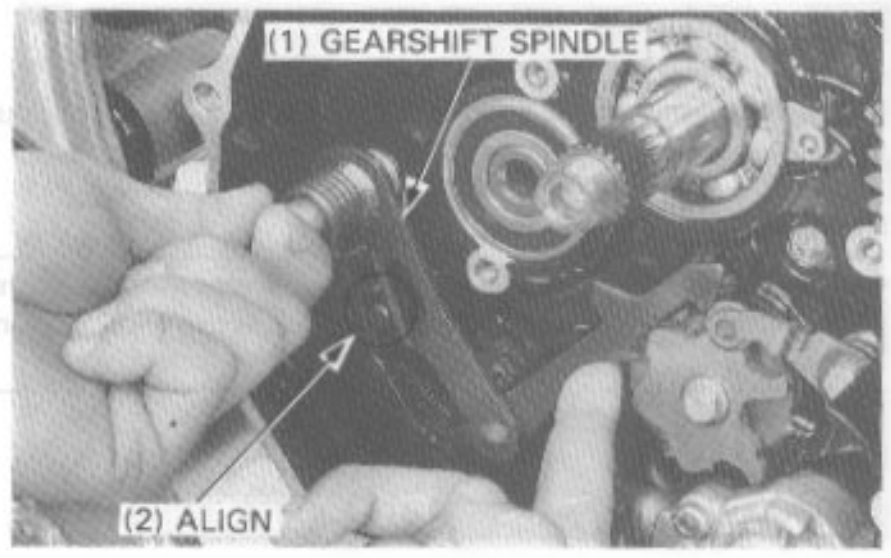

Install the oil pipe stay and tighten two the bolts.
Install the oil pipe with a new O-ring onto the oil pipe stay and tighten the bolt.
Install the gearshift pedal (page 5-9).

TORQUE: 10 N·m (1.0 kg-m, 7 ft-lb)

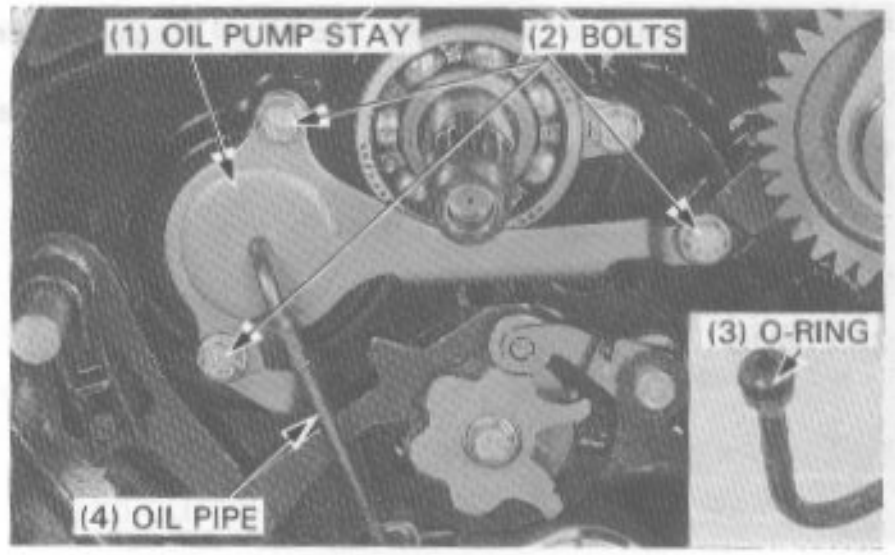

PRIMARY DRIVE GEAR

REMOVAL

Remove the right crankcase cover (page 7-3).
Remove the clutch lifter plate, clutch center, clutch plates and clutch discs (page 7-4).

Remove the pulse generator mounting bolts and pulse generators.
Remove the pulse generator wire grommet from the groove in the right crankcase.

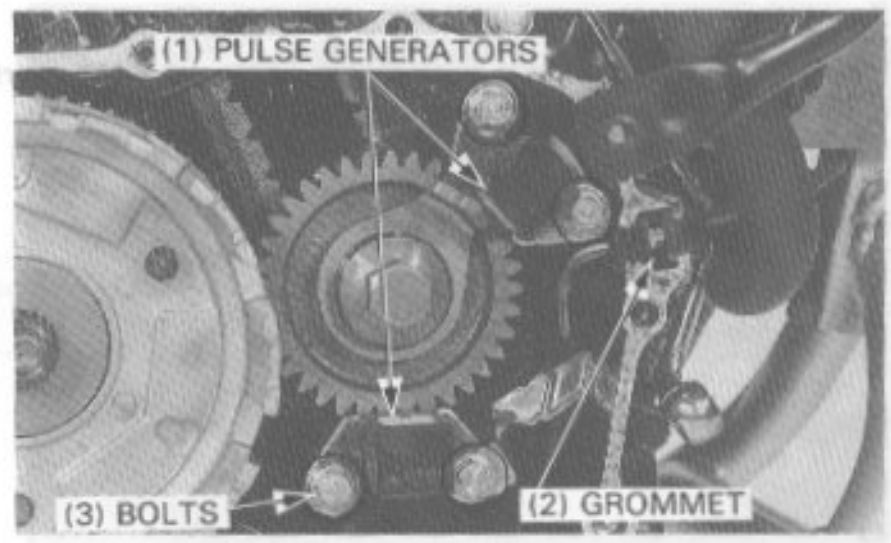

Install the gear holder as shown.

Remove the primary drive gear mounting bolt, pulse generator rotor and primary drive gear from the crankshaft.
Remove the gear holder.

TOOL:
Gear holder **07724–0010100**
Not available in U.S.A.

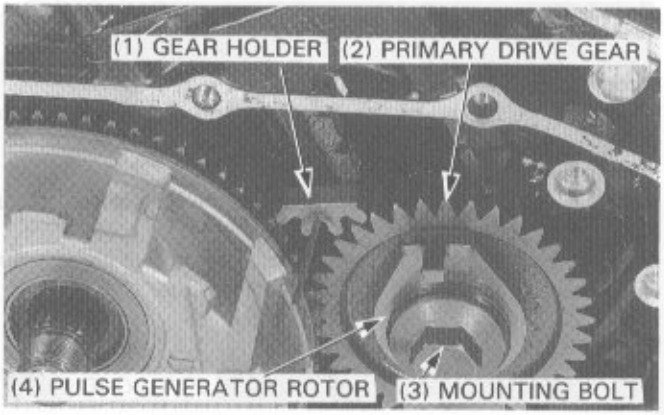

INSTALLATION

Install the primary drive gear with the "OUT" mark facing out.
Install the pulse generator rotor.

NOTE

- The primary drive gear and pulse generator rotor will only go on in one position because of the extra wide aligning spline.

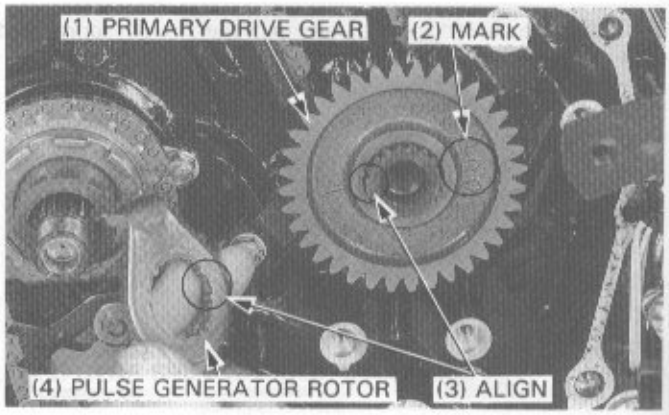

Temporarily install the clutch outer and install the gear holder as shown.
Tighten the primary drive gear mounting bolts to the specified torque.

TORQUE: 90 N·m (9.0 kg-m, 65 ft-lb)

TOOL:
Gear holder **07724–0010100**
Not available in U.S.A.

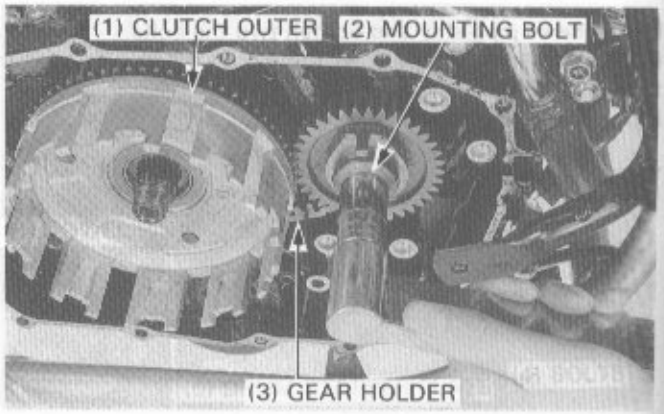

Remove the gear holder.
Install the pulse generator wire clamp and pulse generators, and tighten the pulse generator mounting bolts.
Set the grommet into the groove in the right crankcase.

Install the clutch (page 7-11).

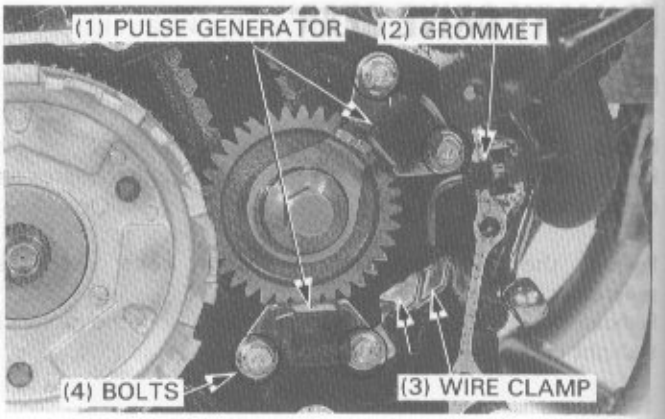

CLUTCH INSTALLATION

Apply MoS_2 paste grease (page 2-10) to the outside of the clutch outer guide.
Install the clutch outer guide onto the mainshaft.

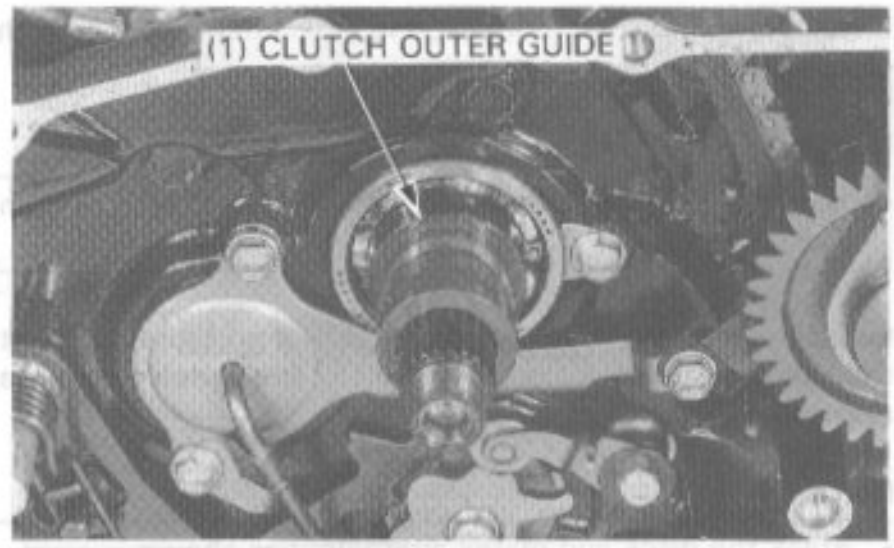

Rail the oil pump drive chain over the oil pump drive sprocket and oil pump driven sprocket with the "IN" mark on the driven sprocket facing inside.
Install the oil pump drive sprocket onto the clutch outer guide and install the oil pump driven sprocket onto the oil pump shaft.

Apply a locking agent to the threads of the oil pump driven sprocket bolt and tighten it with the washer to the specified torque.

TORQUE: 15 N·m (1.5 kg-m, 11 ft-lb)

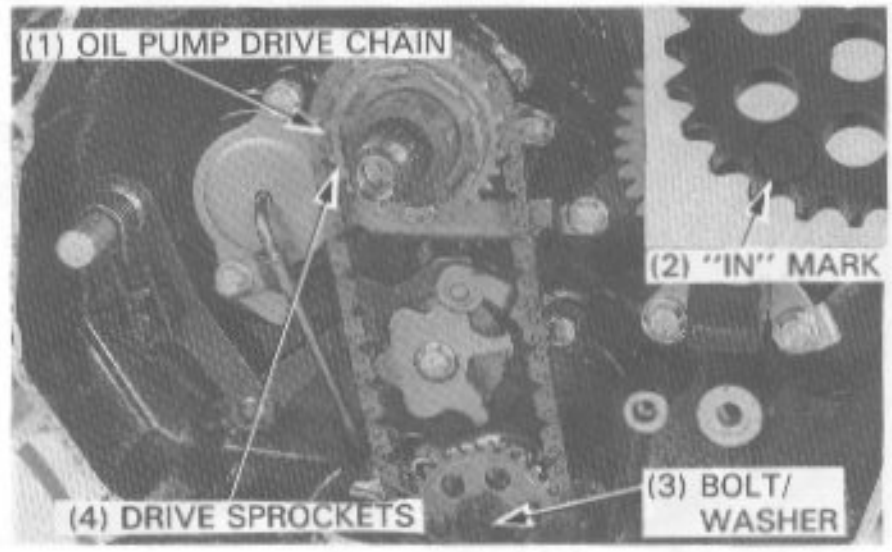

Install the clutch outer onto the oil pump drive sprocket, aligning the bosses of the sprocket with the grooves of the clutch outer.

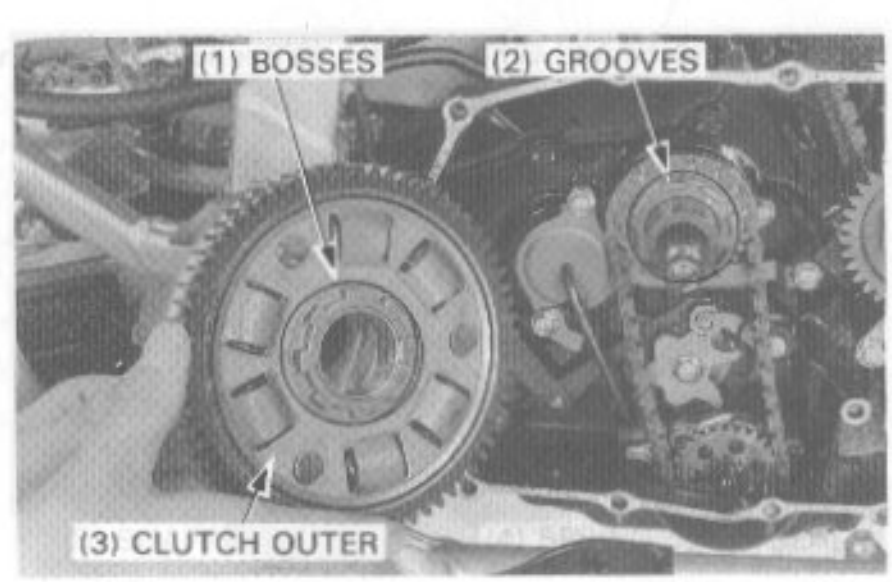

Install the thrust washer.

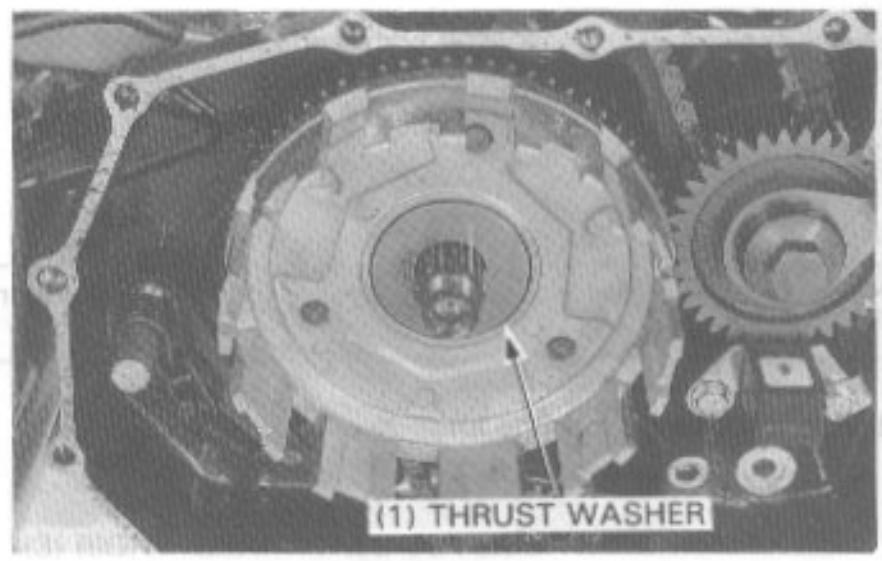

Install the spring seat, judder spring and clutch disc B onto the clutch center.

NOTE

- Note the proper positions for the spring seat, judder spring and disc B as shown at right.

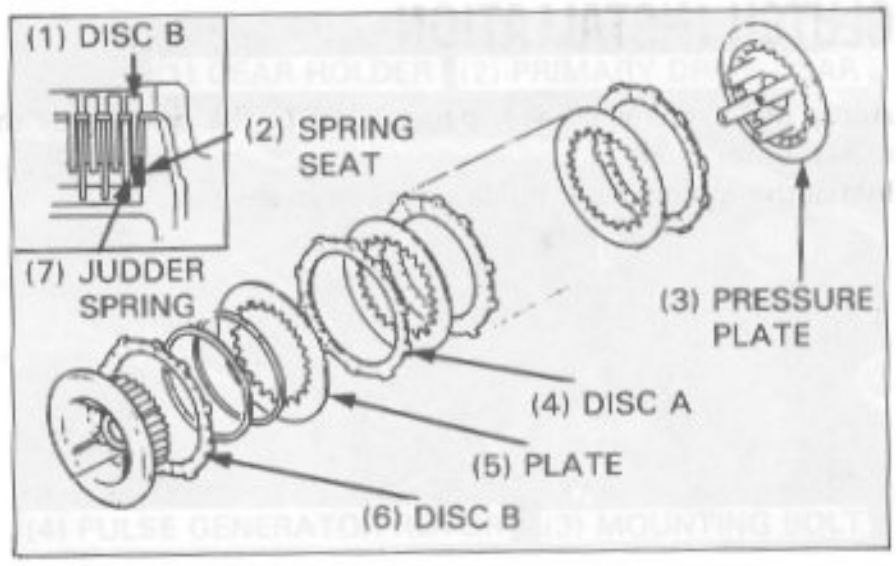

Install the clutch disc A, clutch plates and pressure plate onto the clutch center, then install them into the clutch outer as an assembly.

NOTE

- Stack the discs and plates alternately as shown.
- Coat new clutch discs with clean engine oil.

Install the lock washer onto the mainshaft.

Hold the clutch center with the clutch center holder, and tighten the lock nut to the specified torque.

TORQUE: 130 N·m (13.0 kg-m, 94 ft-lb)

TOOLS:

Clutch center holder	**07923–KE10000 or 07HGB–001000A (U.S.A. only)**
Lock nut wrench, 17 x 27 mm	**07716–0020300**
Extention bar	**07716–0020500 Not available in U.S.A.**

Stake the lock nut with the center punch.

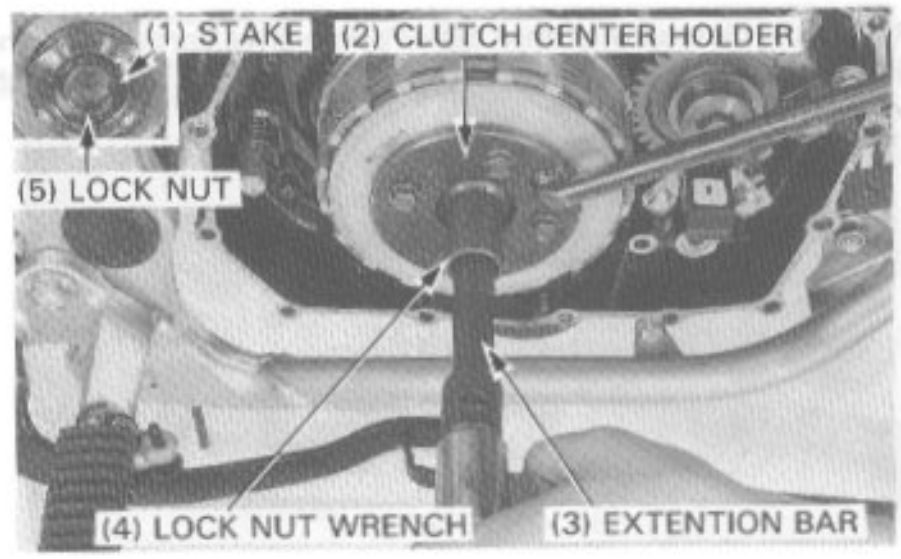

Install the clutch springs, lifter plate and bolts.
Tighten the bolts in a crisscross pattern in 2-3 steps.

TORQUE: 10 N·m (1.0 kg-m, 7 ft-lb)

NOTE

- Make sure the pressure plate firmly pushes the discs and plates.

Install the bearing into the lifter plate.

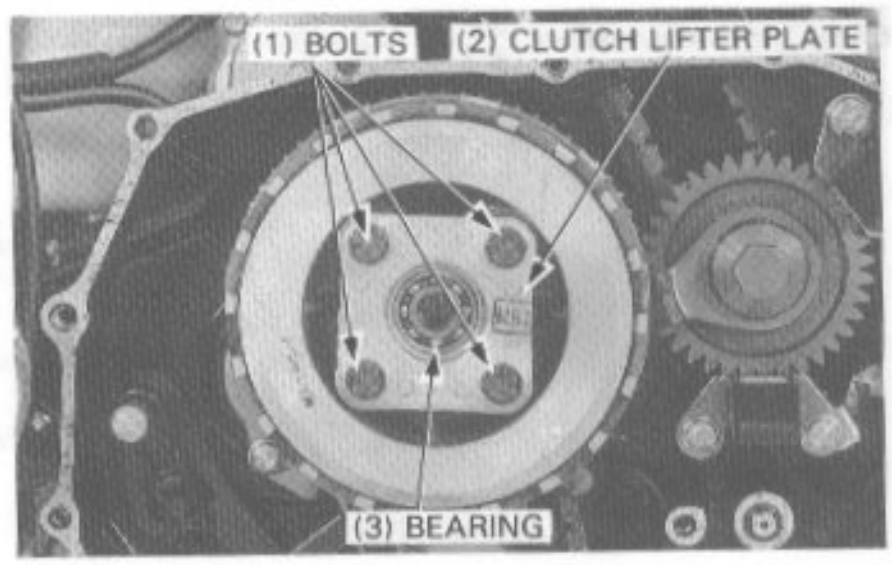

Install a new O-ring to the oil orifice.
Install the oil orifice with its smaller hole facing out.

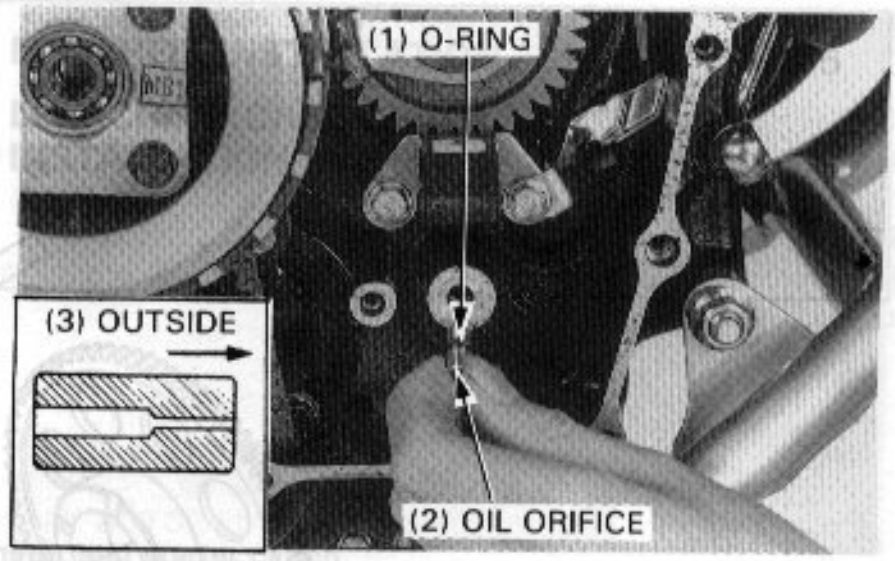

RIGHT CRANKCASE COVER INSTALLATION

Install the dowel pins and a new gasket.

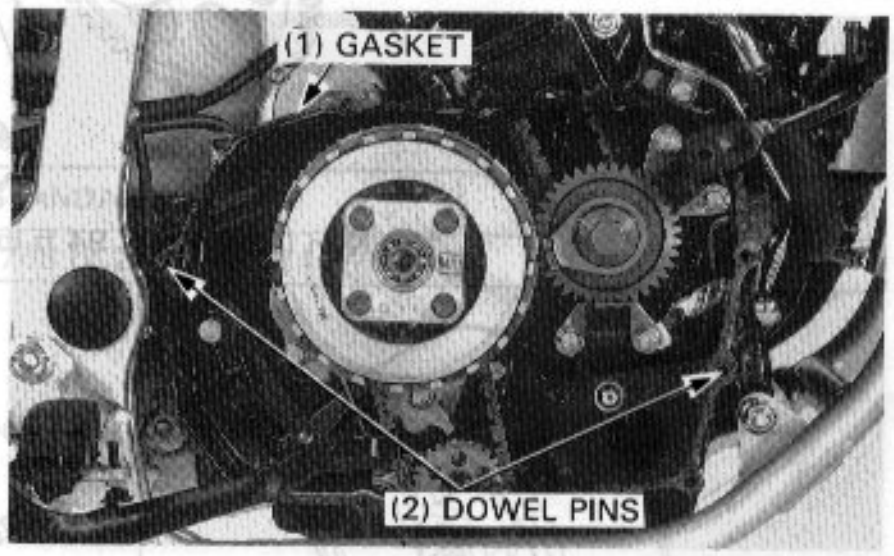

Apply grease to the dust seal and needle bearings.
Install the spring, clutch lifter arm shaft and clutch lifter piece to the right crankcase cover.

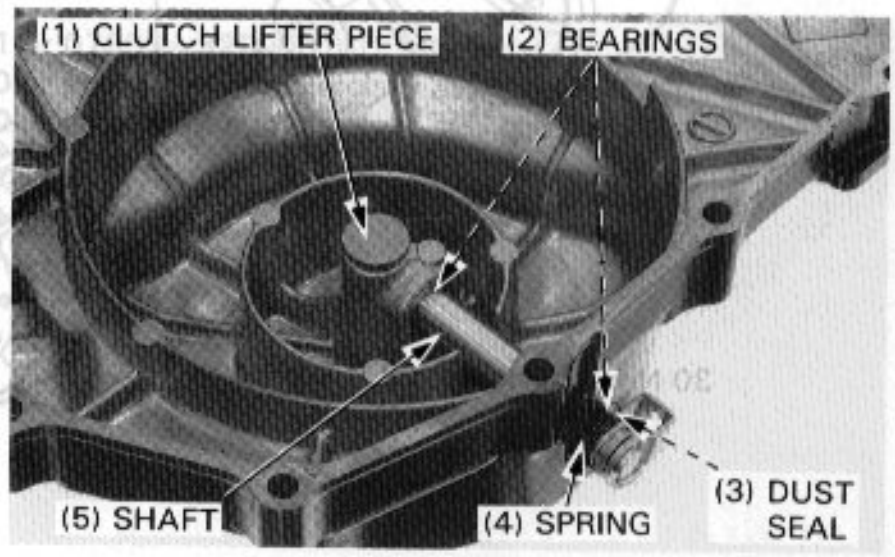

Tighten the right crankcase cover mounting bolts in a crisscross pattern in 2-3 steps and install the clutch cable holder and oil pipe holder at the same time.

TORQUE: 12 N·m (1.2 kg-m, 9 ft-lb)

Connect the clutch cable to the clutch lifter arm.

Tighten the oil pipe bolt with the sealing washer and a new lock washer.

TORQUE: 23 N·m (2.3 kg-m, 17 ft-lb)

Install the exhaust pipe and muffler (page 12-4).
Fill the crankcase with engine oil (page 2-3).
Adjust the clutch lever free play (page 3-15).

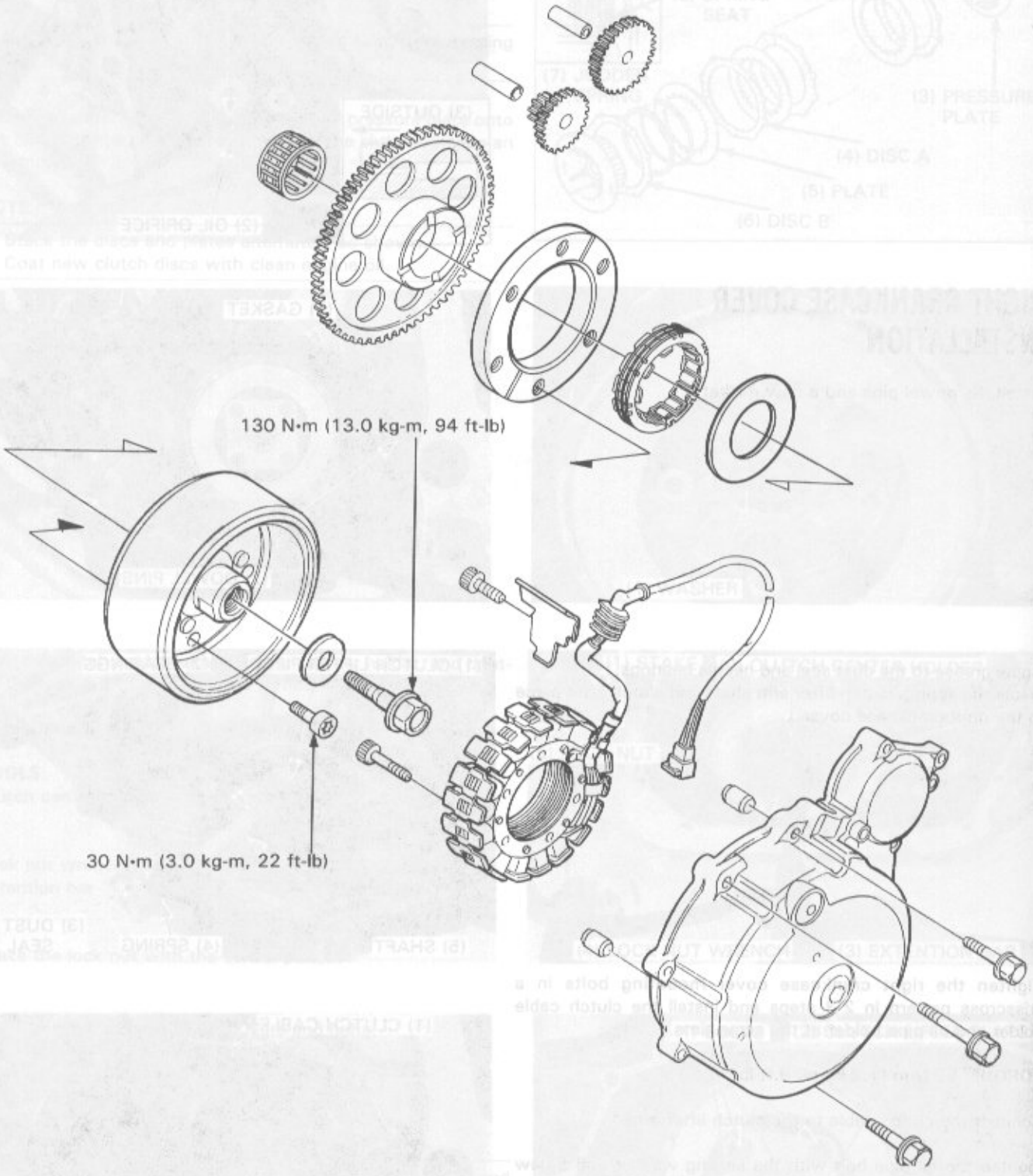
130 N·m (13.0 kg-m, 94 ft-lb)
30 N·m (3.0 kg-m, 22 ft-lb)

8. ALTERNATOR/STARTER CLUTCH

SERVICE INFORMATION	8-1	FLYWHEEL INSTALLATION	8-5
LEFT CRANKCASE COVER REMOVAL	8-2	LEFT CRANKCASE COVER INSTALLATION	8-5
FLYWHEEL REMOVAL	8-2		
STARTER CLUTCH	8-3		

SERVICE INFORMATION

GENERAL

- This section covers the removal and installation of the alternator and starter clutch.
- These operation can be done with the engine installed in the frame.
- For alternator inspection, refer to section 16.

SPECIFICATION

mm (in)

ITEM	STANDARD	SERVICE LIMIT
Starter driven gear O.D.	57.749–57.768 (2.2736–2.2743)	57.60 (2.268)

TORQUE VALUES

Flywheel bolt	130 N·m (13.0 kg-m, 94 ft-lb) Left-hand thread
Starter clutch torx bolts	30 N·m (3.0 kg-m, 22 ft-lb) Apply locking agent

TOOLS

Common

Rotor puller	07733–0020001 or 07933–3290001 (U.S.A. only)
Flywheel holder	07725–0040000 or equivalent commercially available in U.S.A.
Torx bit	07703–0010100 or equivalent commercially available in U.S.A.

LEFT CRANKCASE COVER REMOVAL

Remove the lower cowling (page 12-3).
Remove the seat and disconnect the alternator 3P connector.

Remove the drive sprocket cover (page 5-8).
Remove the left crankcase cover bolts and left crankcase cover.

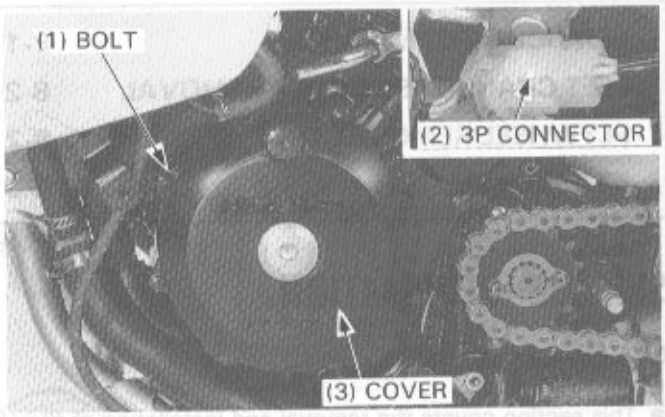

Remove the dowel pins and gasket.

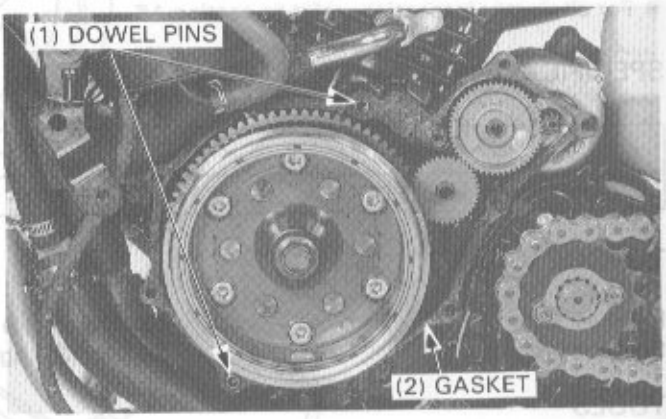

STATOR REMOVAL

Remove the bolt attaching the wire clamp.
Remove the stator bolts and stator.

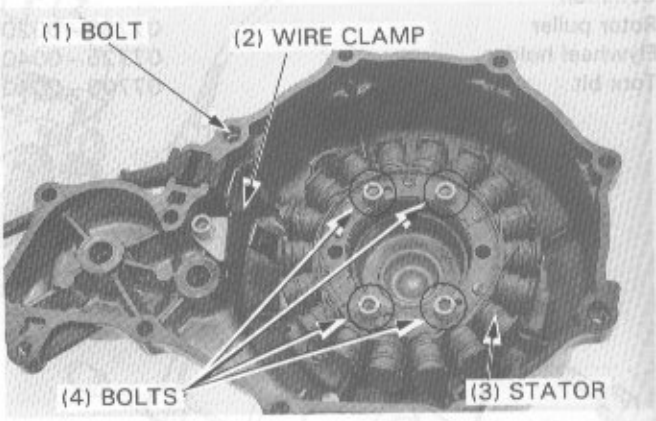

FLYWHEEL REMOVAL

Hold the flywheel with the flywheel holder.
Remove the left-hand thread flywheel bolt and washer.

TOOL:
Flywheel holder — **07725–0040000 or equivalent commercially available in U.S.A.**

NOTE

- The flywheel bolt has left-hand threads.

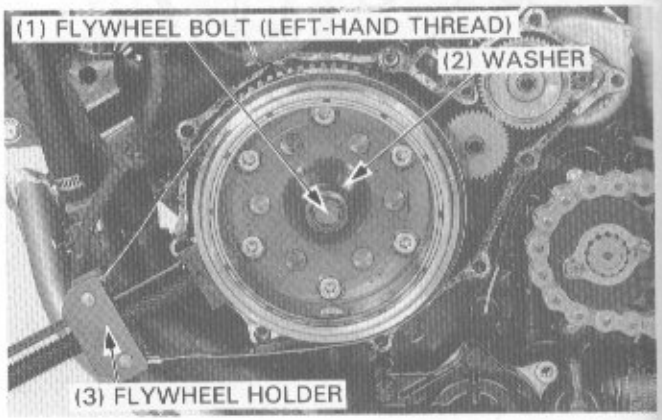

Remove the starter idle gear and shaft.
Remove the flywheel with the starter driven gear using the rotor puller.

TOOL:
Rotor puller **07733–0020001 or 07933–3290001 (U.S.A. only)**

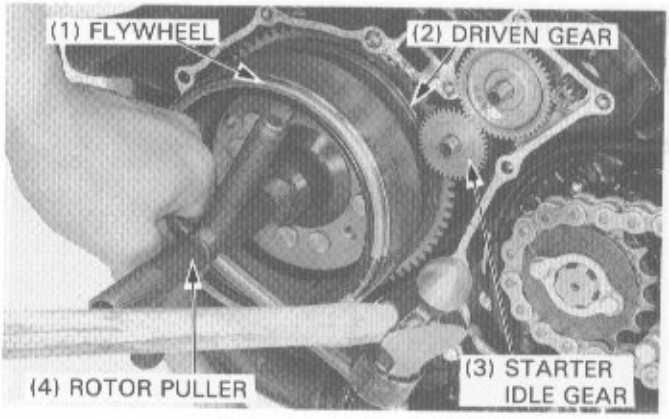

Remove the starter drive gear and shaft.
Remove the needle bearing and cam chain tensioner set plate.
Remove the woodruff key.

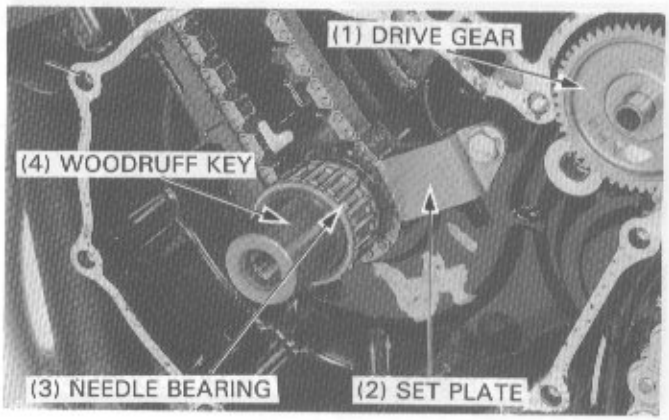

STARTER CLUTCH

Inspect the starter clutch by turning the starter driven gear. The starter driven gear should turn counterclockwise freely and should not turn clockwise; if not, replace the starter clutch.

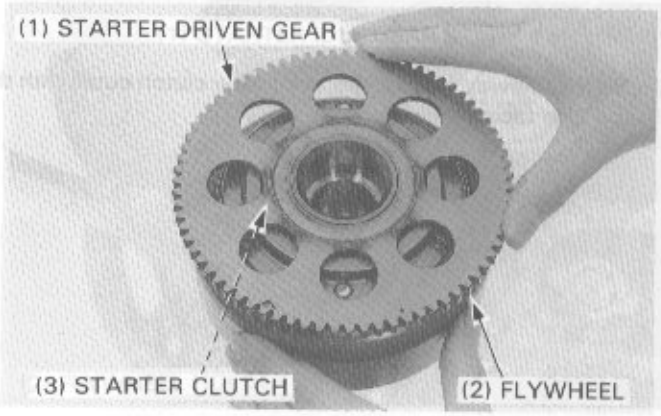

DISASSEMBLY

If the starter clutch is faulty, remove the socket bolts using a torx bit.
Remove the starter clutch outer, oneway clutch and washer.

TOOL:
Torx bit (T40) **07703–0010100 or equivalent commercially available in U.S.A.**

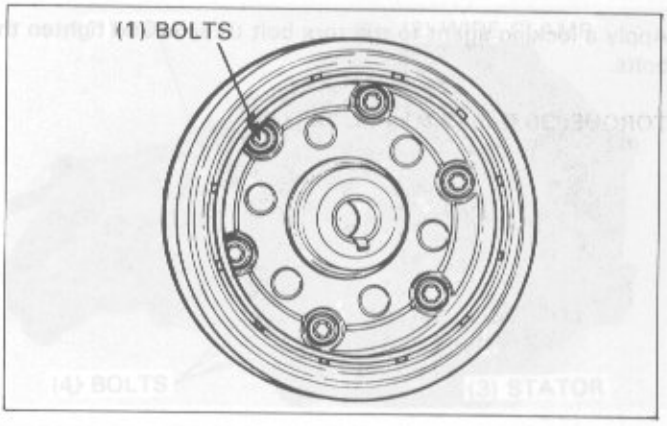

INSPECTION

Measure the O.D. of the boss of the starter driven gear.

SERVICE LIMIT: 57.60 mm (2.268 in)

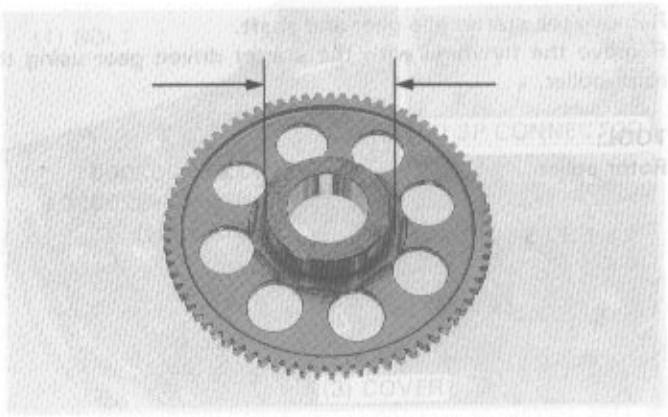

Inspect the oneway clutch for wear or damage and replace if necessary.

ASSEMBLY

Install the oneway clutch onto the starter clutch outer with the flange side facing inside.

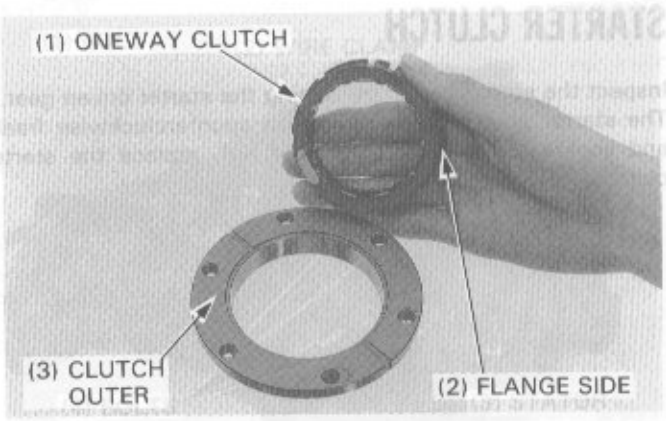

Apply a locking agent to the torx bolt threads and tighten the bolts.

TORQUE: 30 N·m (3.0 kg-m, 22 ft-lb)

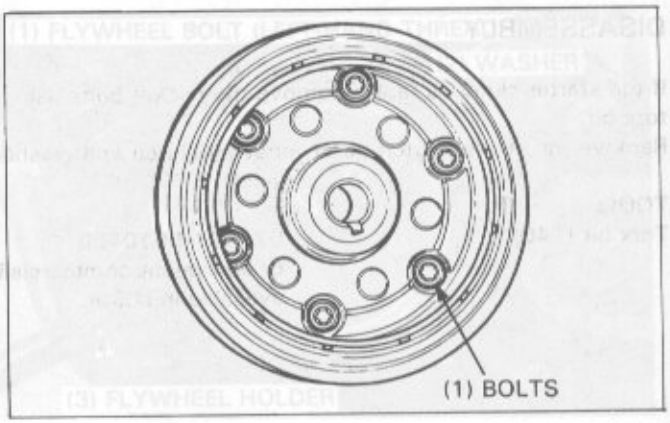

Install the washer into the flywheel assembly.

FLYWHEEL INSTALLATION

Clean the crankshaft.
Install the cam chain tensioner set plate.

Install the needle bearing onto the crankshaft.
Install the woodruff key into the groove in the crankshaft.

Install the starter drive gear with the "OUT" mark facing out.
Install the drive gear shaft.

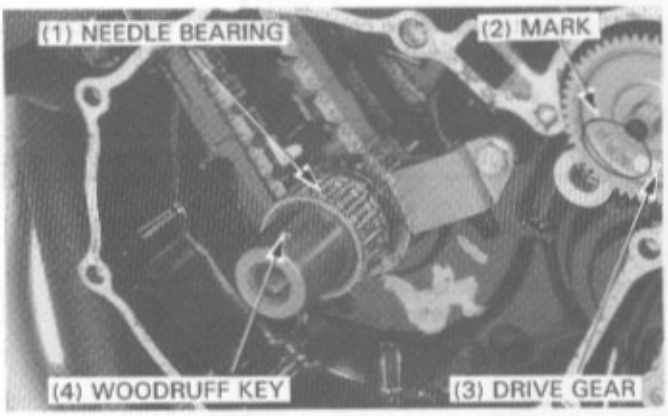

Install the flyweel, aligning the woodruff key on the crankshaft with the flywheel keyway.

Install the starter idle gear and shaft.

Hold the flywheel with the flywheel holder, install the washer and flywheel bolt and tighten the bolt.

TORQUE: 130 N·m (13.0 kg-m, 94 ft-lb)

NOTE

- The flywheel bolt has left-hand threads.

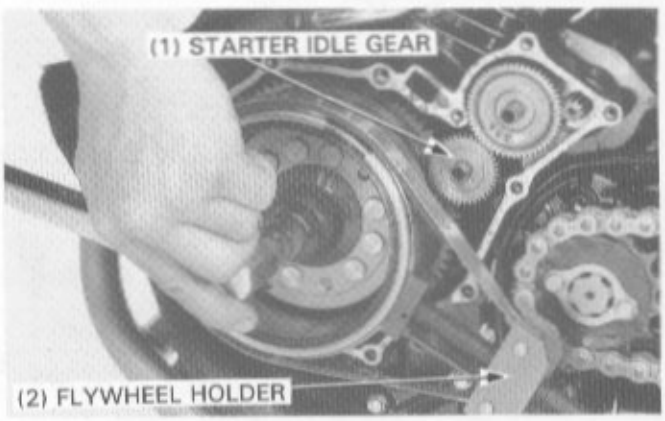

LEFT CRANKCASE COVER INSTALLATION

STATOR INSTALLATION

Install the stator and tighten it with the four bolts.
Install the alternator wire grommet into the groove of the left crankcase cover.
Install the wire clamp and tighten it with the bolt as shown.

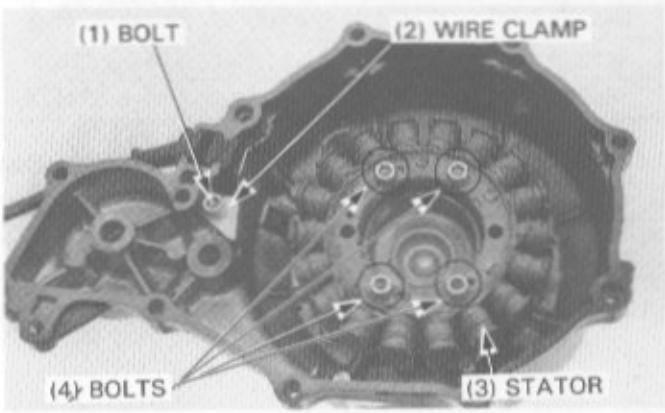

LEFT CRANKCASE COVER INSTALLATION

Install the dowel pins and a new gasket.

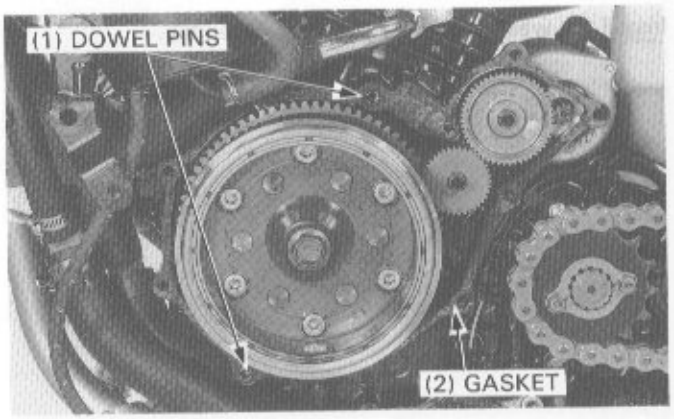

Install the left cranckcase cover and tighten the left crankcase cover bolts with the alternator wire clamp.

NOTE

- Apply sealant to the bolt indicated by the arrow at right.

Connect the alternator 3P connector and install the seat.

Install the drive sprocket cover (page 5-9).
Install the lower cowling (page 12-3).

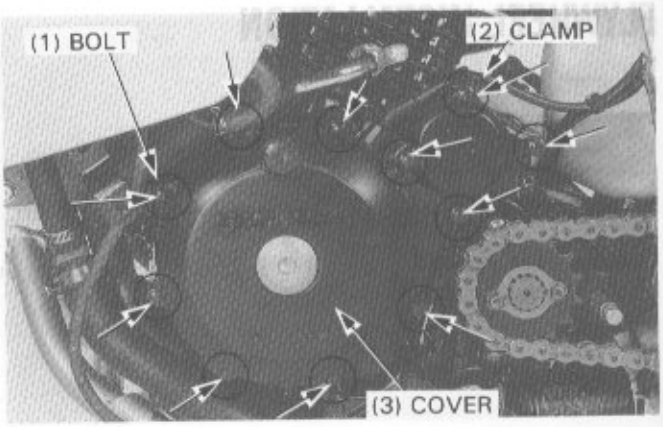

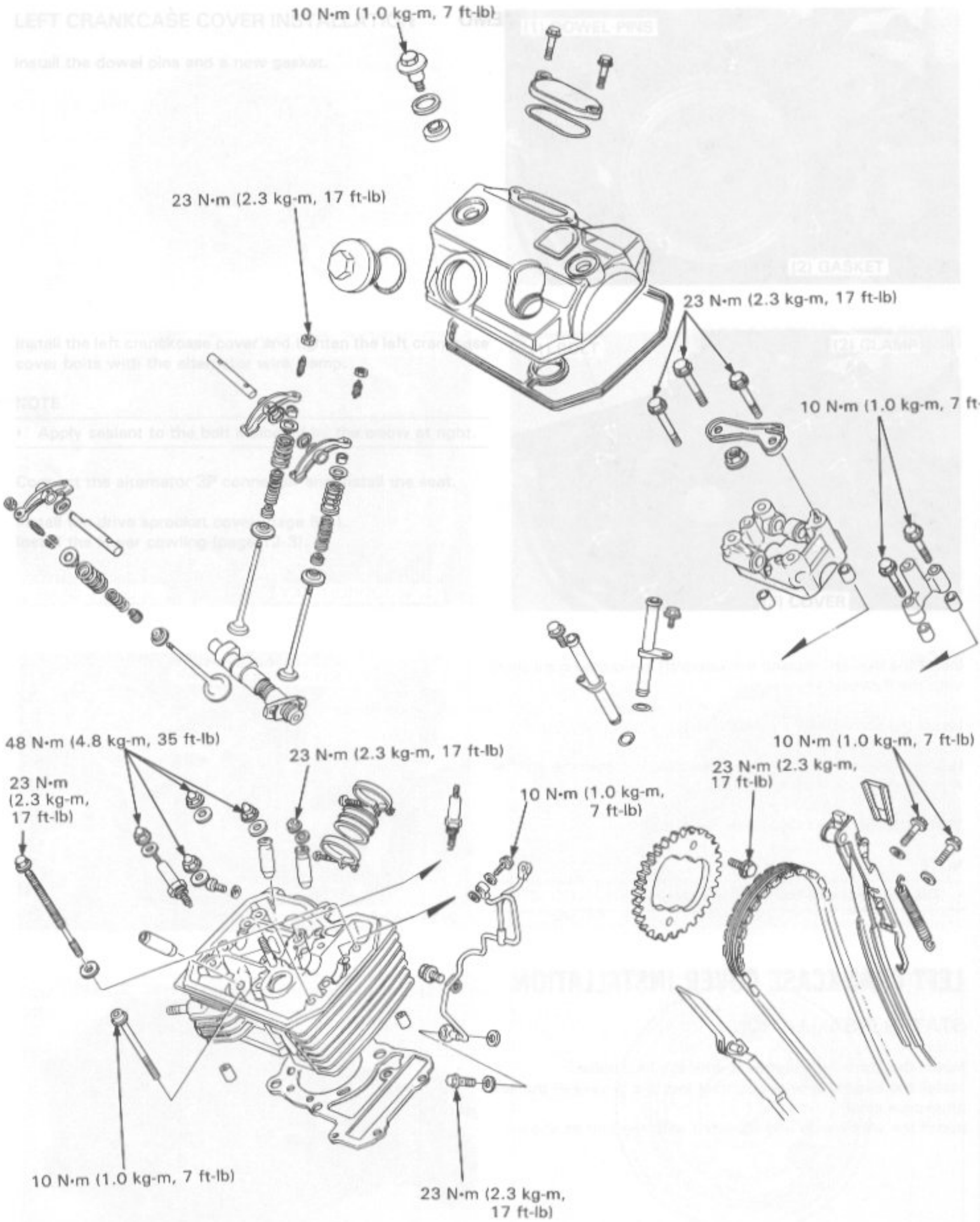
10 N·m (1.0 kg-m, 7 ft-lb)
23 N·m (2.3 kg-m, 17 ft-lb)
23 N·m (2.3 kg-m, 17 ft-lb)
10 N·m (1.0 kg-m, 7 ft-lb)
48 N·m (4.8 kg-m, 35 ft-lb)
23 N·m (2.3 kg-m, 17 ft-lb)
23 N·m (2.3 kg-m, 17 ft-lb)
10 N·m (1.0 kg-m, 7 ft-lb)
10 N·m (1.0 kg-m, 7 ft-lb)
23 N·m (2.3 kg-m, 17 ft-lb)
10 N·m (1.0 kg-m, 7 ft-lb)
23 N·m (2.3 kg-m, 17 ft-lb)

9. CYLINDER HEAD/VALVE

SERVICE INFORMATION	9-1	CYLINDER HEAD ASSEMBLY	9-14
TROUBLESHOOTING	9-2	CYLINDER HEAD INSTALLATION	9-15
CYLINDER HEAD COVER REMOVAL	9-3	CAMSHAFT INSTALLATION	9-16
CAMSHAFT REMOVAL	9-4	CYLINDER HEAD COVER INSTALLATION	9-19
CYLINDER HEAD REMOVAL	9-8		
VALVE GUIDE REPLACEMENT	9-10		
VALVE SEAT INSPECTION/ REFACING	9-11		

SERVICE INFORMATION

GENERAL

- To service the cylinder head, the engine must be removed from the frame; you can service the cylinder head cover, rocker arm, camshaft, cam chain and cam chain tensioner without removing the engine.
- Camshaft lubricating oil is fed through an oil pass pipe. Be sure the holes in the oil pass pipe bolts are not clogged.
- During assembly apply MoS_2 paste grease (page 2-10) to the camshaft holders, camshaft journals of the cylinder head, rocker arm shafts, rocker arm slipper faces and valve stems to provide initial lubrication.

SPECIFICATIONS

Unit: mm (in)

ITEM				STANDARD	SERVICE LIMIT
Compression pressure				1177 ± 98 kPa (12.0 ± 1.0 kg/cm², 171 ± 14 psi)	—
Camshaft	Cam lobe height	IN		38.189 (1.5035)	38.17 (1.503)
		EX		38.213 (1.5044)	38.19 (1.504)
	Journal O.D.			21.959–21.980 (0.8645–0.8654)	21.95 (0.864)
	Runout			0.030 (0.0012)	0.05 (0.002)
	Oil clearance			0.050–0.111 (0.0020–0.0044)	0.13 (0.005)
Rocker arm	Rocker arm I.D.	IN/EX		12.000–12.018 (0.4724–0.4731)	12.03 (0.474)
	Rocker arm shaft O.D.	IN/EX		11.966–11.984 (0.4711–0.4718)	11.96 (0.471)
Valves and valve guides	Valve stem O.D.	IN		5.475–5.490 (0.2156–0.2161)	5.45 (0.215)
		EX		6.555–6.570 (0.2580–0.2587)	6.55 (0.258)
	Valve guide I.D.	IN		5.500–5.520 (0.2165–0.2173)	5.56 (0.219)
		EX		6.600–6.620 (0.2598–0.2606)	6.65 (0.262)
	Stem-to-guide clearance	IN		0.010–0.045 (0.0004–0.0018)	0.10 (0.004)
		EX		0.035–0.050 (0.0014–0.0020)	0.11 (0.004)
	Valve seat width			0.9–1.1 (0.035–0.043)	1.5 (0.06)
Valve springs	Free length	OUTER	IN	42.14 (1.659)	40.44 (1.592)
			EX	42.83 (1.686)	41.13 (1.619)
		INNER	IN	38.11 (1.500)	36.41 (1.433)
			EX	38.81 (1.528)	37.11 (1.461)
Cylinder head warpage				—	0.10 (0.004)

TORQUE VALUES

Cylinder head cover mounting bolt	10 N·m (1.0 kg-m, 7 ft-lb)
Camshaft holder mounting bolt (8 mm)	23 N·m (2.3 kg-m, 17 ft-lb)
nut (8 mm)	23 N·m (2.3 kg-m, 17 ft-lb)
bolt (6 mm)	10 N·m (1.0 kg-m, 7 ft-lb)
Cylinder head mounting nut (10 mm)	48 N·m (4.8 kg-m, 35 ft-lb)
bolt (8 mm)	23 N·m (2.3 kg-m, 17 ft-lb)
nut (8 mm)	23 N·m (2.3 kg-m, 17 ft-lb)
bolt (6 mm)	10 N·m (1.0 kg-m, 7 ft-lb)
Cam sprocket bolt	23 N·m (2.3 kg-m, 17 ft-lb)
Cam chain tensioner mounting bolt	10 N·m (1.0 kg-m, 7 ft-lb)
Oil pass pipe bolt (7 mm)	10 N·m (1.0 kg-m, 7 ft-lb)
(8 mm)	23 N·m (2.3 kg-m, 17 ft-lb)

TOOLS

Special

Valve guide reamer (IN)	07984—2000001
Valve guide reamer (EX)	07984—ZE20001
Valve guide driver attachment (IN)	07943—MF50100
Valve guide driver attachment (EX)	07943—MF50200

Common

Valve guide driver, 5.5 mm (IN)	07742—0010100
Valve guide driver, 6.6 mm (EX)	07742—0010200 or 07942—6570100
Valve spring compressor	07757—0010000 or 07957—3290001

Valve seat cutter

Cutter holder	IN 5.5 mm	07781—0010101
	EX 6.6 mm	07781—0010201
Flat cutter	IN 28 mm (32°)	07780—0012100
	EX 35 mm (32°)	07780—0012300
Interior cutter	IN 30 mm (60°)	07780—0014000
	EX 37.5 mm (60°)	07780—0014100
Seat cutter	IN 27.5 mm (45°)	07780—0010200
	EX 35 mm (45°)	07780—0010400

TROUBLESHOOTING

Engine top-end problems are usually performance-related and can usually be diagnosed by a compression test. Engine noises can usually be traced to the top-end with a sounding rod or stethoscope.

Uneven or low compression

- Valves
  - Incorrect valve adjustment
  - Burned or bent valves
  - Incorrect valve timing
  - Broken valve spring
- Cylinder head
  - Leaking or damaged head gasket
  - Warped or cracked cylinder head
- Cylinder and piston (Refer to Section 10)

High compression

- Excessive carbon built-up on piston crown or combustion chamber

Excessive noise

- Incorrect valve adjustment
- Sticking valve or broken valve spring
- Damaged or worn rocker arm or camshaft
- Loose or worn cam chain
- Worn or damaged cam chain tensioner
- Worn cam sprocket teeth

Poor idling

- Compression too low

CYLINDER HEAD COVER REMOVAL

Drain the coolant (page 5-3).

Remove the fuel tank (page 4-3).
Remove the carburetor (page 4-8).

Remove the fan motor and fan motor shroud as an assembly. Hang it from the handlebars using a string not to be damaged.

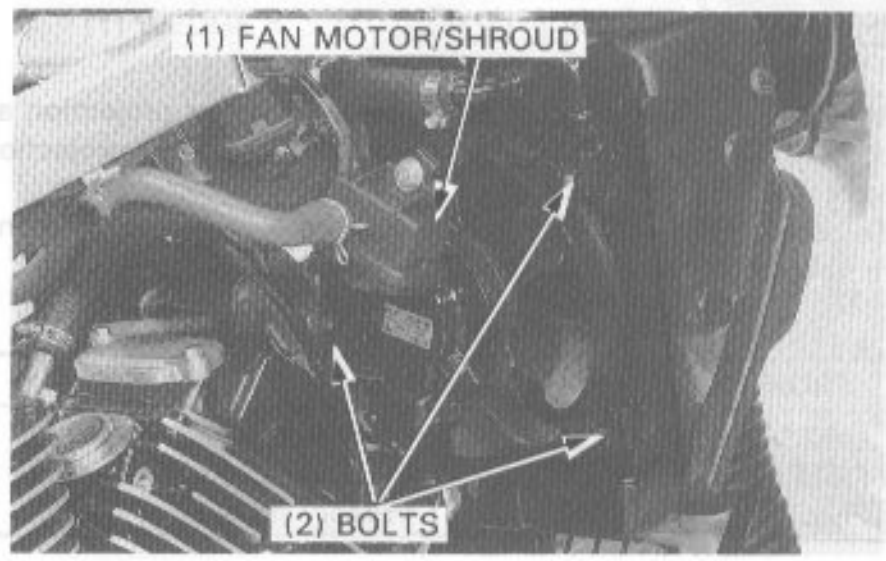

Remove the spark plug cap from the spark plug.
Remove the bolt and ignition coil stay from the frame.

Remove the frame bridge mounting bolts and frame bridge.

Disconnect the cylinder head cover breather tube at the cylinder head cover.

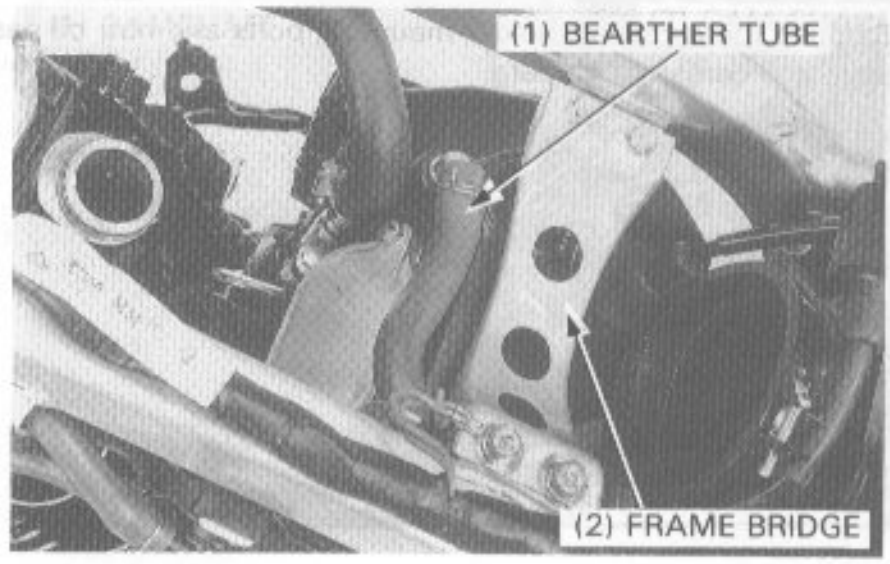

Remove the bolts and water pipes from both the cylinder heads.

Remove the cylinder head cover mounting bolts, rubber washer covers, rubber washers and cylinder head covers.

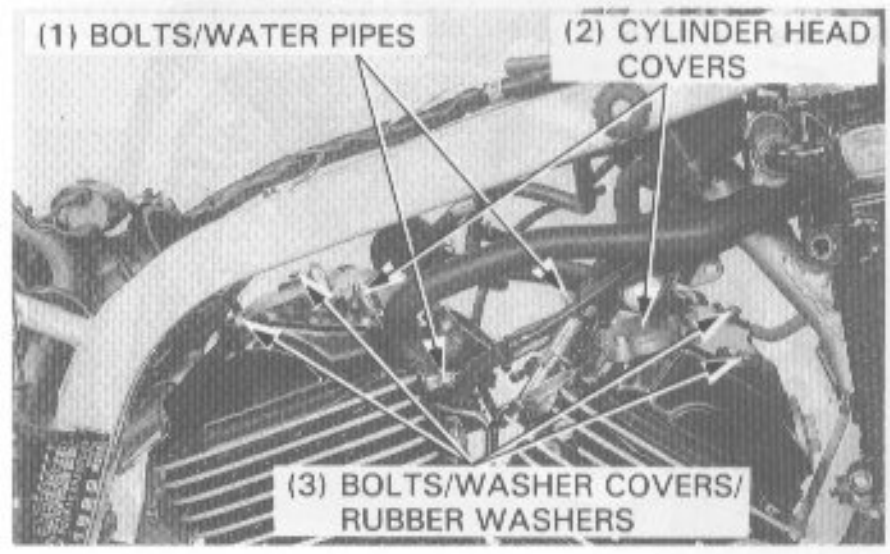

CAM CHAIN INSPECTION

Measure the height of the cam chain tensioner projection as shown. Replace the cam chain with a new one if the projection exceeds 7.0 mm (0.28 in).
To replace the cam chain, drain the oil from the engine and remove the following parts:

FRONT CYLINDER HEAD	REAR CYLINDER HEAD
Left crankcase cover	Right crankcase cover
Front camshaft	Rear camshaft
Flywheel	Primary drive gear

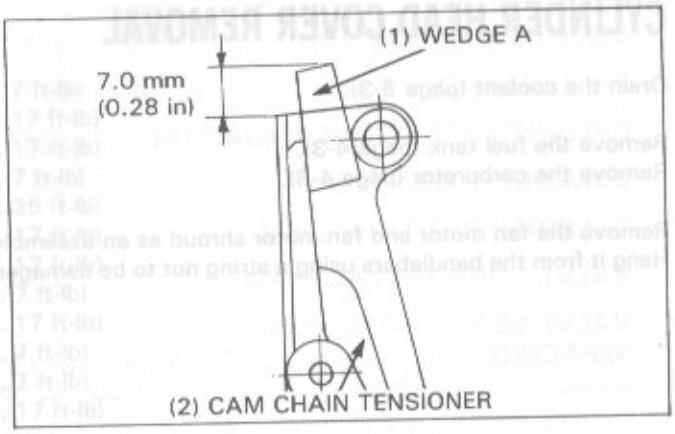

CAMSHAFT REMOVAL

Remove the cylinder head cover (page 9-3).
Remove the timing hole cap and crankshaft hole cap from the left crankcase cover.
Align the "FT" mark (rear: "RT" mark) on the flywheel with the notch on the left crankcase cover by turning the crankshaft counterclockwise. Make sure the piston is at TDC (TOP DEAD CENTER) on the compression stroke.
If the piston is not at TDC, turn the crankshaft 360° counterclockwise, and re-align the mark with the notch.

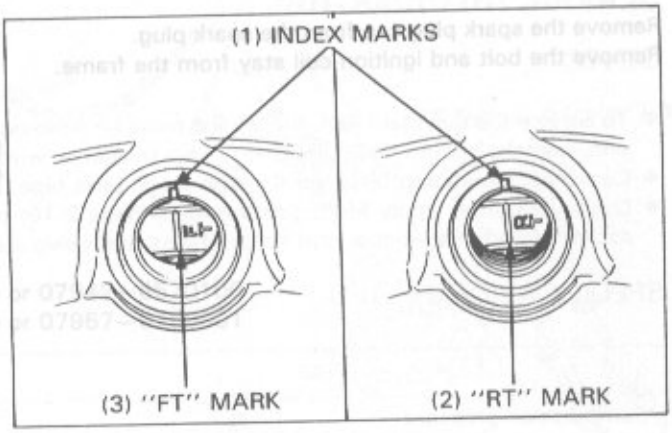

Remove the camshaft holder mounting bolts and nut, oil passage and camshaft holders.

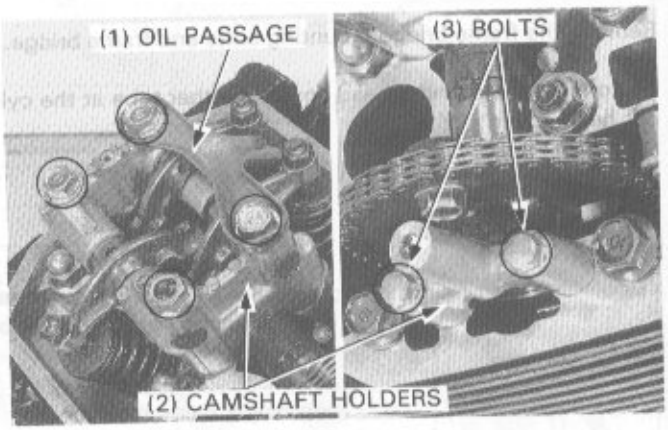

Remove the dowel pins.

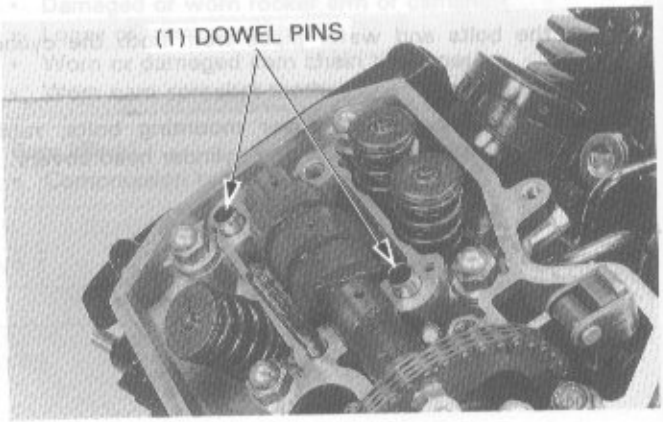

Pull the cam chain tensioner wedge A straight up while holding wedge B down.
Secure the wedge A with a 2 mm pin as shown.

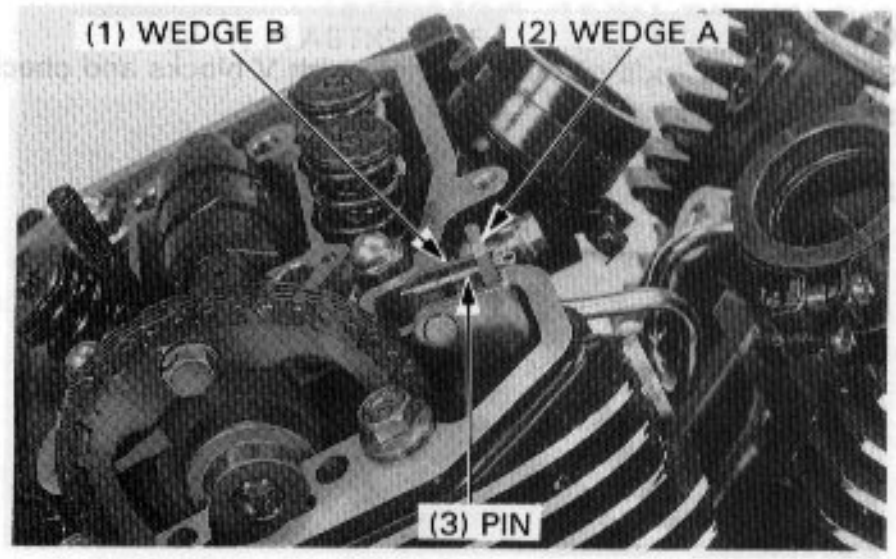

Remove the cam sprocket bolt, rotate the crankshaft counterclockwise one turn (360°) and remove the other cam sprocket bolt.

NOTE

- Be careful not to let the cam sprocket bolts fall into the crankcase.

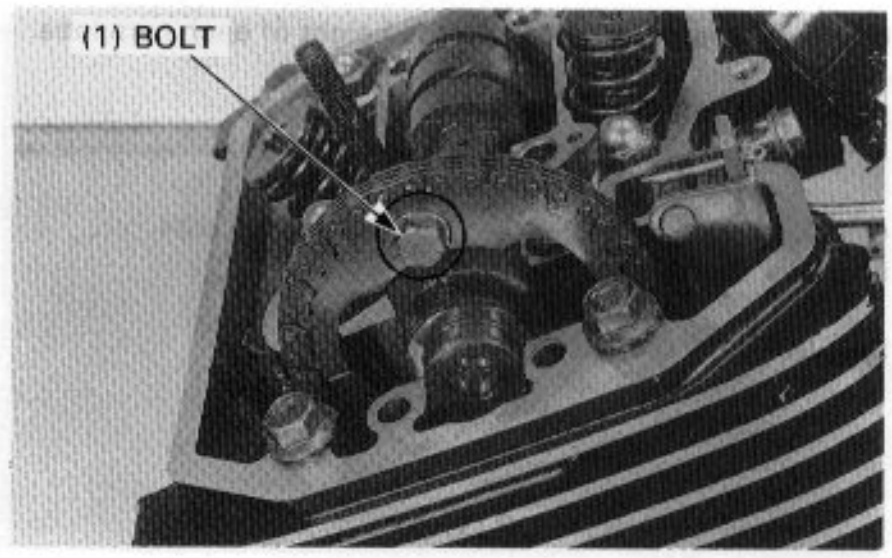

Remove the cam sprocket from the camshaft flange.

Hang the cam chain on the camshaft behind the camshaft flange and remove the cam sprocket while lifting up the camshaft.

Attach a piece of wire to the cam chain to prevent it from being dropped into the crankcase.

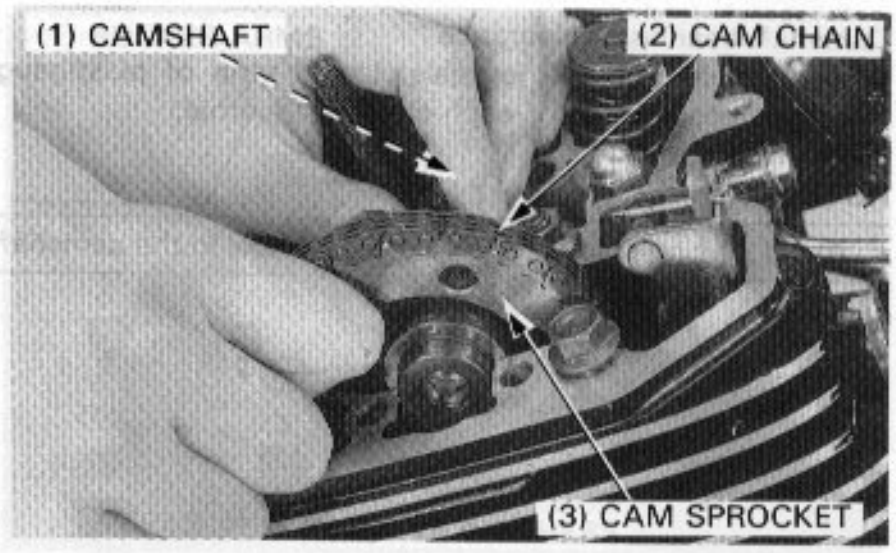

INSPECTION

Cylinder head
Inspect the camshaft holder and cylinder head journal surfaces for scoring or evidence of insufficient lubrication.

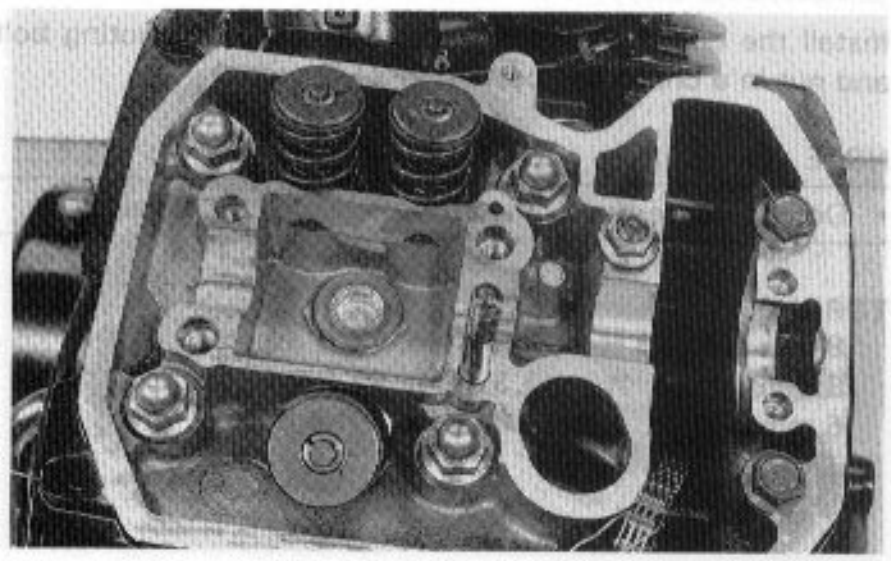

Camshaft runout
Support both ends of the camshaft with V-blocks and check the camshaft runout with a dial indicator.

SERVICE LIMIT: 0.05 mm (0.002 in)

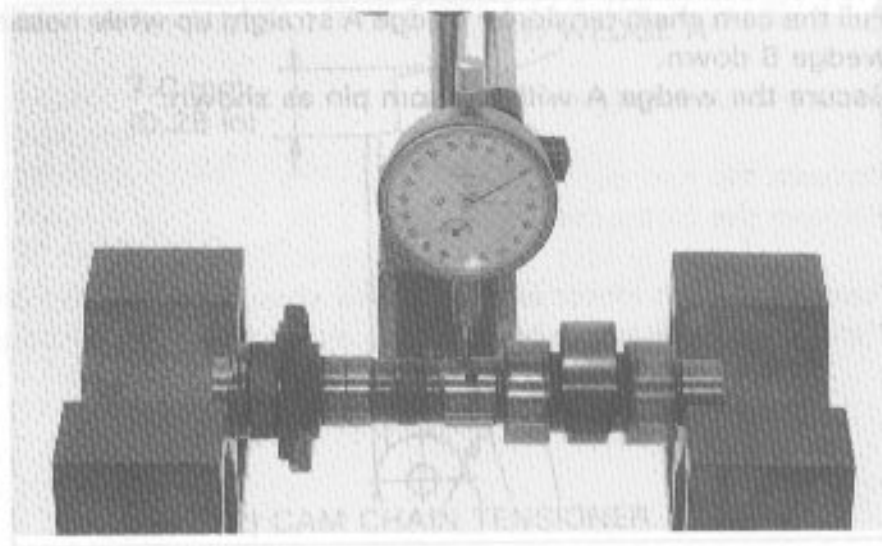

Using a micrometer, measure the height of each cam lobe.

SERVICE LIMITS: IN: 38.17 mm (1.503 in)
EX: 38.19 mm (1.504 in)

Check the camshaft journals for wear or damage.
Measure the O.D. of each journal.

SERVICE LIMIT: 21.90 mm (0.862 in)

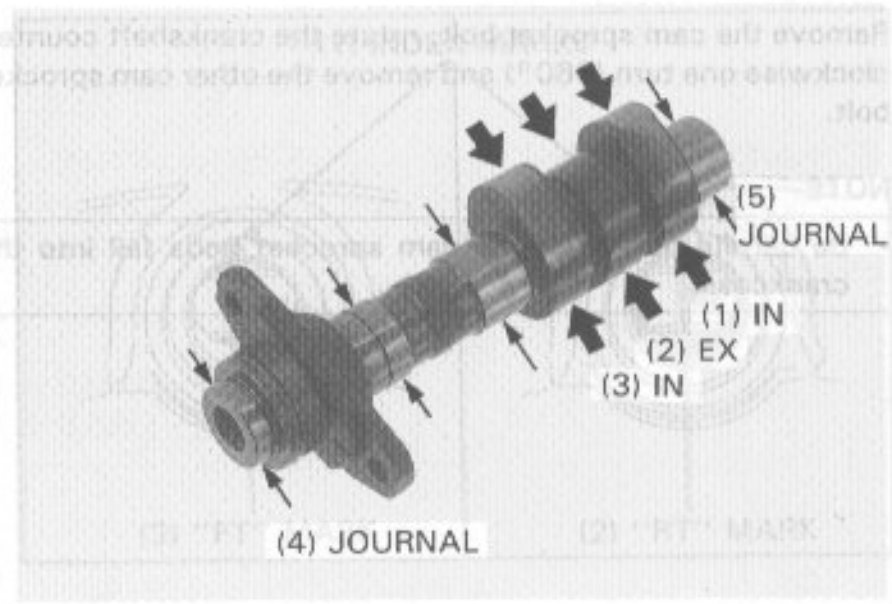

Camshaft bearing oil clearance
Wipe any oil from the journals. Lay a strip of plastigauge lengthwise on the top of each camshaft journal.

NOTE

- Avoid placing plastigauge over the oil hole in the camshaft.

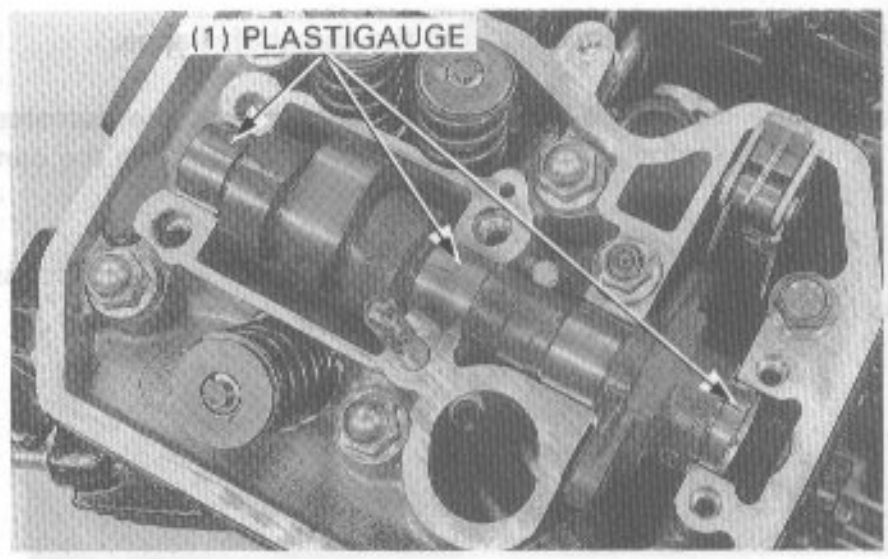

Install the camshaft holders and tighten the mounting bolts and nut in a crisscross pattern in 2—3 steps.

NOTE

- Do not rotate the camshaft when using plastigauge.

TORQUES:
8 mm bolt: 23 N·m (2.3 kg-m, 17 ft-lb)
8 mm nut: 23 N·m (2.3 kg-m, 17 ft-lb)
6 mm bolt: 10 N·m (1.0 kg-m, 7 ft-lb)

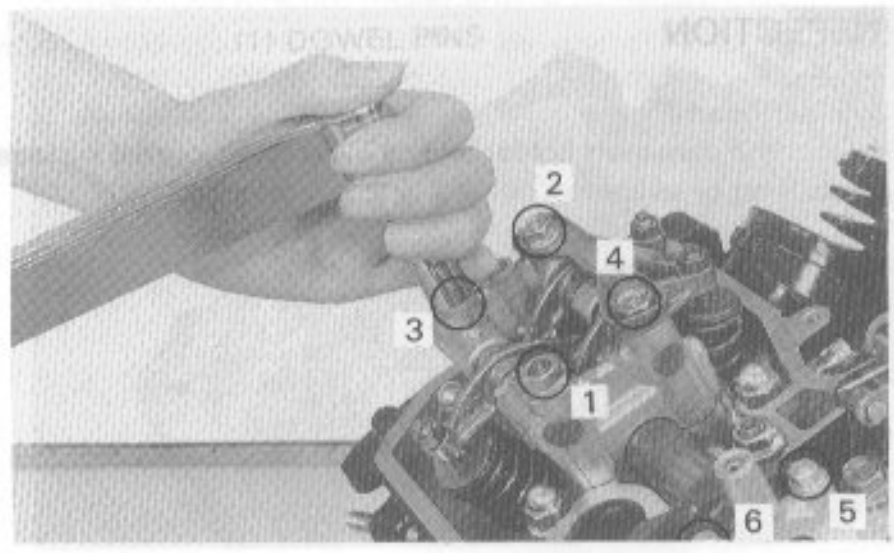

Remove the camshaft holder and measure the width of each plastigauge. The widest thickness determines the oil clearance.

SERVICE LIMIT: 0.13 mm (0.005 in)

When the service limit is exceeded, replace the camshaft and recheck the oil clearance.

Replace the cylinder head and camshaft holder if the clearance still exceeds the service limit.

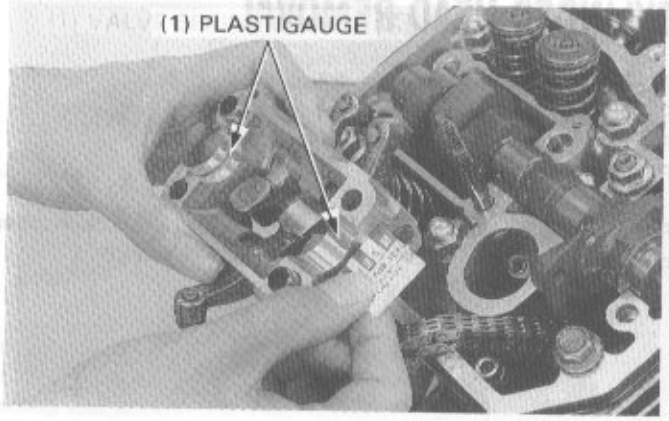

CAMSHAFT HOLDER/ROCKER ARM SHAFT/ ROCKER ARM

Remove the rocker arm shafts by tapping the holder and the rocker arms with a soft hammer.

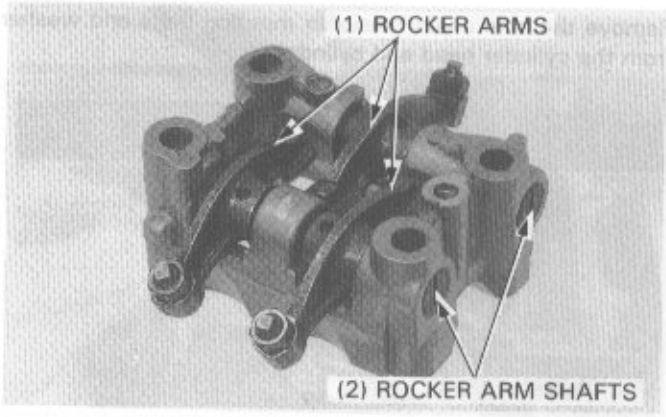

Remove the rocker arms and wave washers from the shafts.

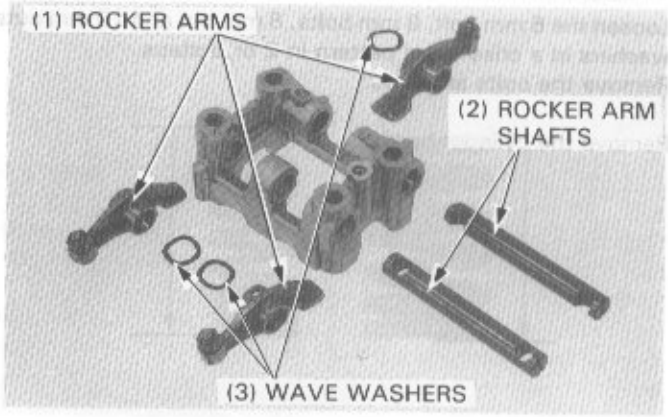

Inspect the rocker arm shafts and rocker arms for wear or damage.

Check the rocker arms for clogged oil holes.

Measure the O.D. of each rocker arm shaft.

SERVICE LIMIT:
IN/EX: 11.96 mm (0.471 in)

Measure the I.D. of each rocker arm.

SERVICE LIMIT: 12.03 mm (0.474 in)

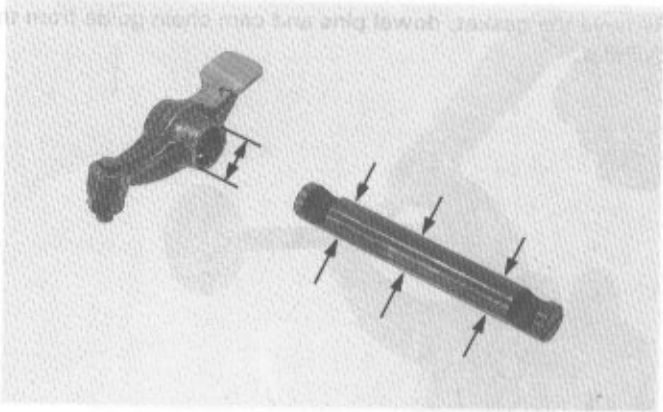

CYLINDER HEAD REMOVAL

Remove the engine from the frame (page 6-2).
Remove the cylinder head cover (page 9-3).
Remove the camshaft holder (page 9-4).
Remove the camshaft (page 9-4).

Remove the oil pass pipe bolts, sealing washer, lock washer, oil pass pipe holder mounting bolt and oil pass pipe.

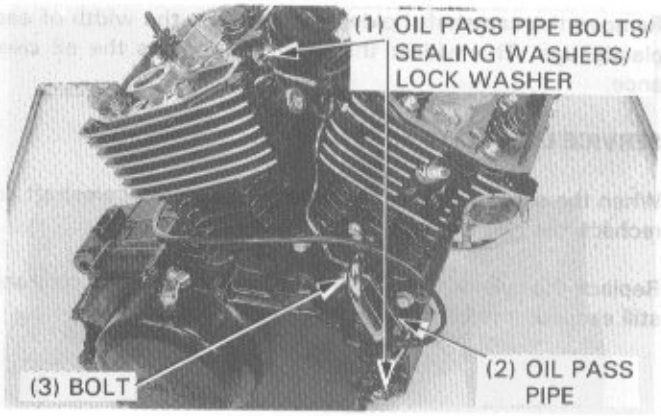

Remove the cam chain tensioner mouting bolts and washers from the cylinder head and cylinder.

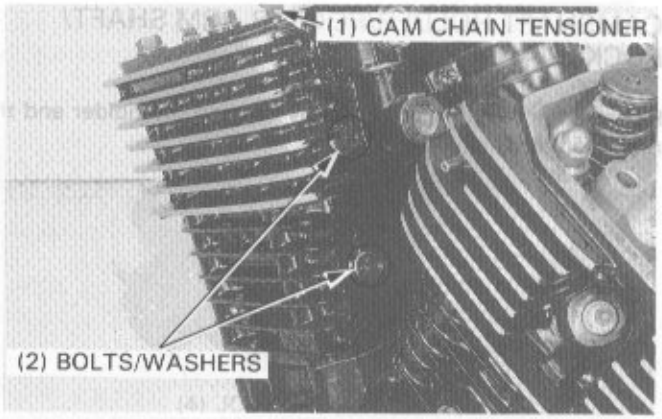

Loosen the 6 mm bolt, 8 mm bolts, 8 mm nut and 10 mm nuts/ washers in a criss-cross pattern in 2 or 3 steps.
Remove the bolts and nuts.

Remove the cylinder head.

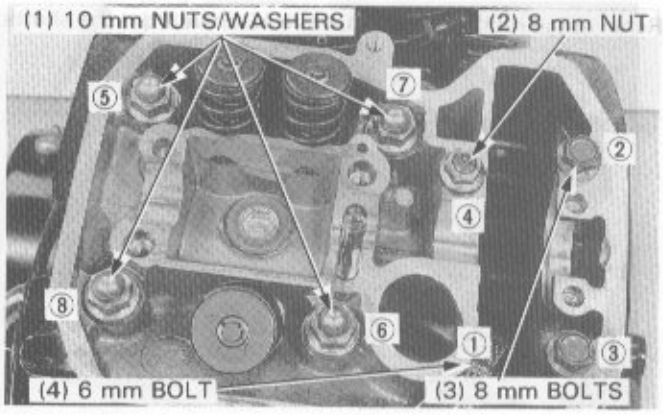

Remove the gasket, dowel pins and cam chain guide from the cylinder.

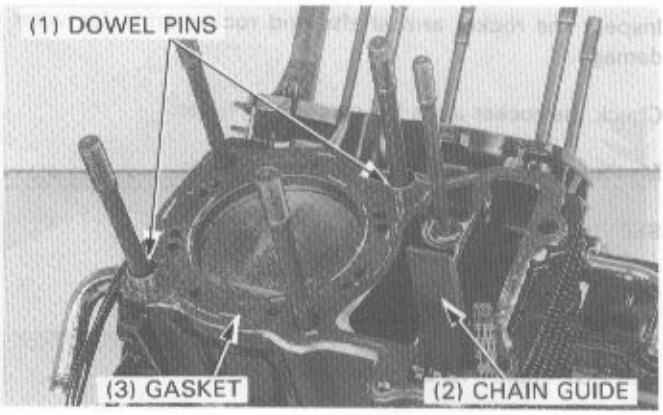

DISASSEMBLY/INSPECTION

Remove the valve spring cotters, retainers, springs, spring seats, valve stem seals and valves using a Valve Spring Compressor.

TOOL:
Valve spring compressor **07757–0010000**

CAUTION

- *To prevent loss of tension, do not compress the valve springs more than necessary to remove the cotters.*

NOTE

- Mark all parts during disassembly so they can be replaced in their original locations.

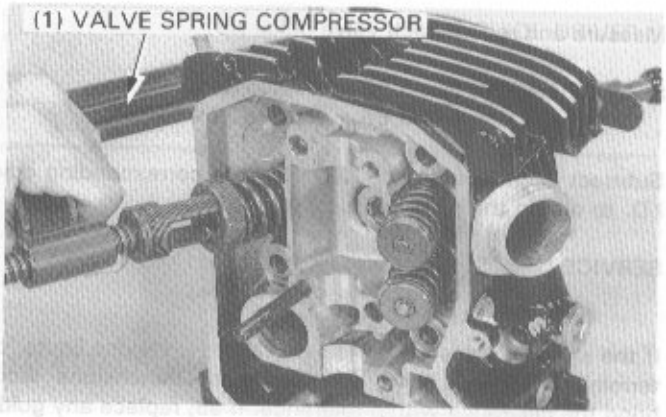

Cylinder head
Clean the cylinder head surfaces off any gasket material.

CAUTION

- *Avoid damaging the mating surfaces of the cylinder head.*

Check the spark plug hole and valve areas for cracks.
Check the cylinder head for warpage with the straight edge and thickness gauge.

SERVICE LIMIT: 0.10 mm (0.004 in)

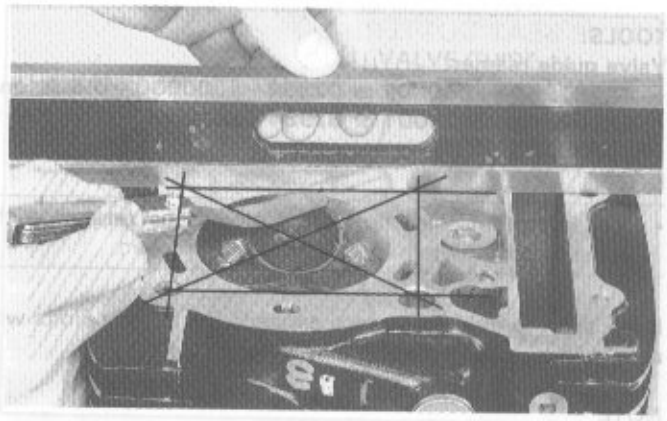

Valve springs
Measure the free length of the inner and outer valve springs.

SERVICE LIMITS:
INNER (IN): 36.41 mm (1.433 in)
(EX): 37.11 mm (1.461 in)
OUTER (IN): 40.44 mm (1.592 in)
(EX): 41.13 mm (1.619 in)

Replace the springs as a set if any are shorter than the service limits.

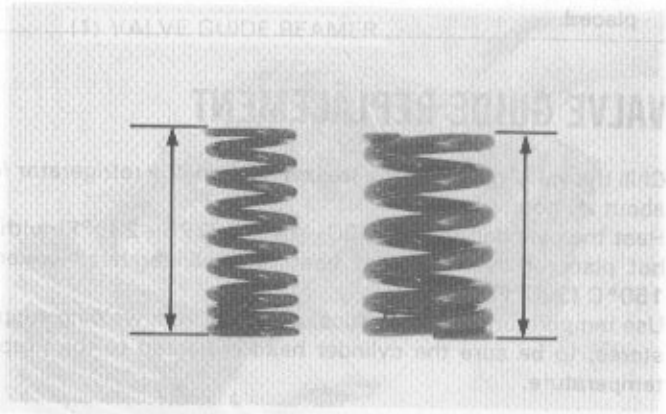

Valve stem-to-guide clearance.
Inspect each valve for bending, burning, scratches or abnormal stem wear.

Check valve movement in the guide, and measure and record each valve stem O.D.

SERVICE LIMITS: IN: 5.45 mm (0.215 in)
EX: 6.55 mm (0.258 in)

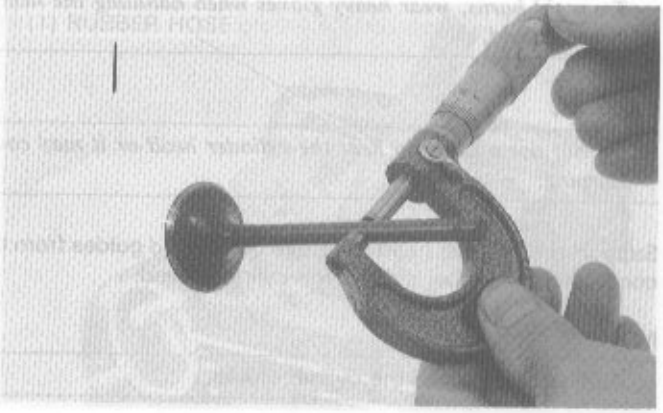

Measure and record each valve guide I.D.

SERVICE LIMITS: IN: 5.56 mm (0.219 in)
EX: 6.65 mm (0.262 in)

Subtract each valve stem O.D. from the corresponding guide I.D. to obtain the stem to guide clearance.

SERVICE LIMITS: IN: 0.10 mm (0.004 in)
EX: 0.11 mm (0.004 in)

If the stem-to-guide clearance exceeds the service limits, determine if a new guide with standard dimensions would bring the clearance within tolerance. If so, replace any guides as necessary and ream to fit.

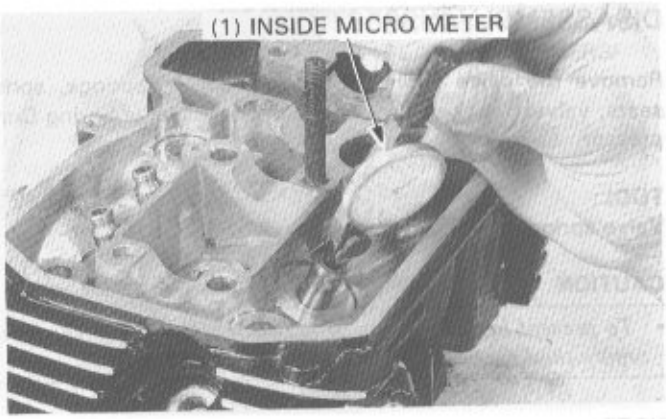

TOOLS:
Valve guide reamer
IN: 07984—2000001 or 07984—200000C ┐ **U.S.A. only**
EX: 07984—ZE20001 or 07984—ZE2000C ┘

NOTE

- It is important that the reamer always be rotated in the same direction when it is inserted or removed.

If the stem-to-guide clearance exceeds the service limits with new guides, also, replace the valves.

NOTE

- Reface the valve seats whenever the valve guides are replaced.

VALVE GUIDE REPLACEMENT

Chill the valve guides in the freezer section of a refrigerator for about an hour.
Heat the cylinder head to 130—140°C (275—290°F) with a hot plate or oven. Do not heat the cylinder head beyond 150°C (300°F).
Use temperature indicator stics, available from welding supply stores, to be sure the cylinder head is heated to the proper temperature.

⚠WARNING

- ***To avoid burns, wear heavy gloves when handling the heated cylinder head.***

CAUTION

- *Do not use a torch to heat the cylinder head or it may cause warping.*

Support the cylinder head and drive out the old guides from the combustion chamber side of the cylinder head.

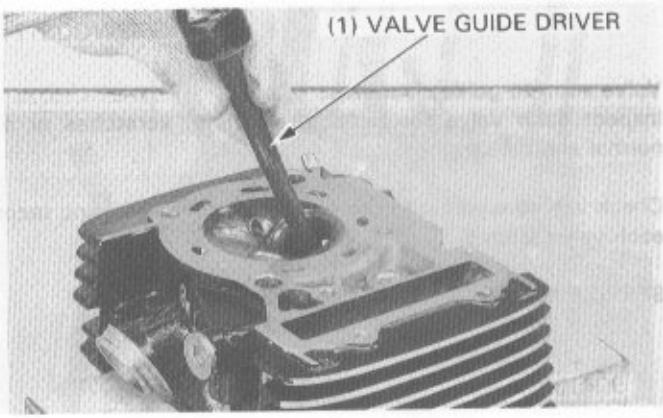

NOTE

- Avoid damaging to the cylinder head.

TOOLS:
Valve guide driver
IN: 07742—0010100
EX: 07742—0010200

Make note of the valve guide projection height following below, then drive in new guides from camshaft side of the cylinder head.

TOOLS:
Valve guide driver
5.5 mm (IN): 07742—0010100
6.6 mm (EX): 07742—0010200 or 07942—6570100 (U.S.A. only)
Attachment
5.5 mm (IN): 07943—MF50100
6.6 mm (EX): 07943—MF50200

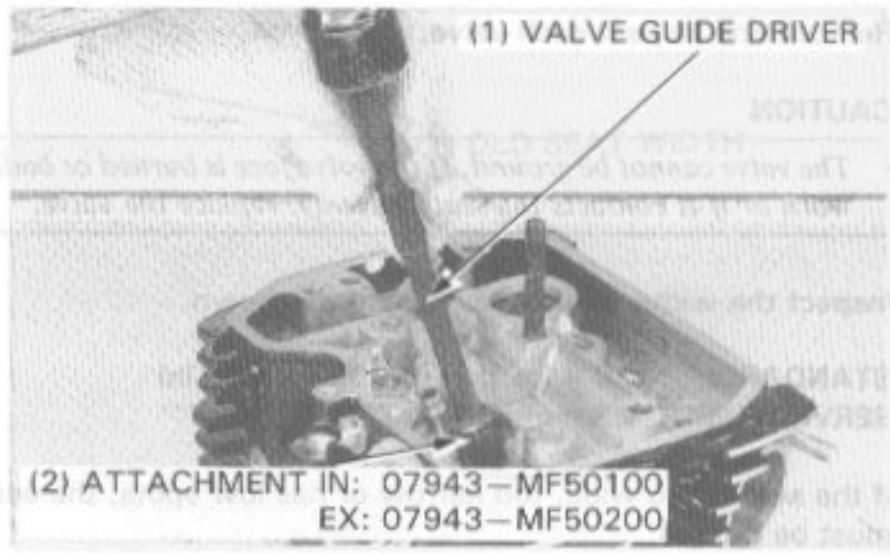

VALVE PROJECTION HEIGHT:
IN: 19.5 ± 0.1 mm (0.77 ± 0.004 in)
EX: 18.5 ± 0.1 mm (0.71 ± 0.004 in)

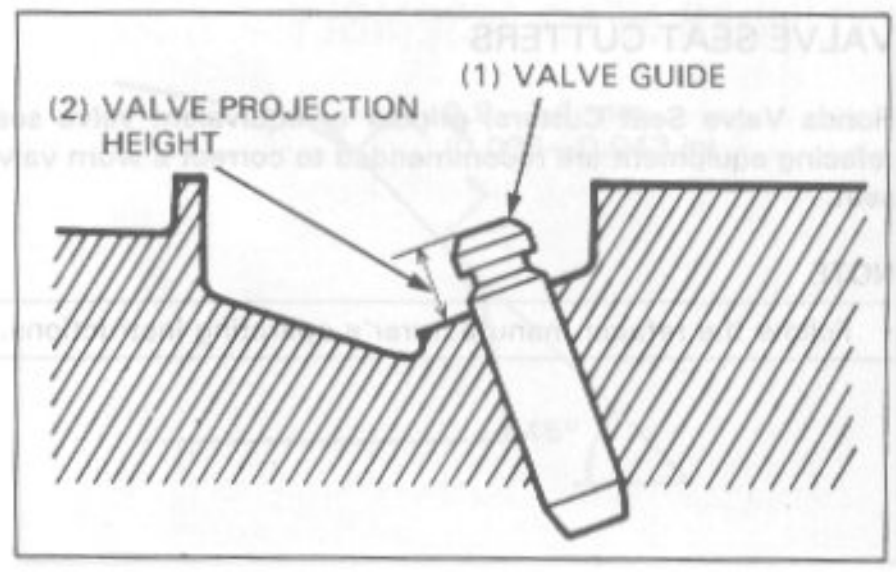

Ream new valve guides after installation.

NOTE

- Use cutting oil on the reamer during this operation.
- It is important that the reamer always be rotated in the same direction when it is inserted or removed.

Clean the head thoroughly after reaming the valve guides.

TOOLS:
Valve guide reamer
IN: 07984—2000001 or 07984—200000C ┐ **U.S.A. only**
EX: 07984—ZE20001 or 07984—ZE2000C ┘

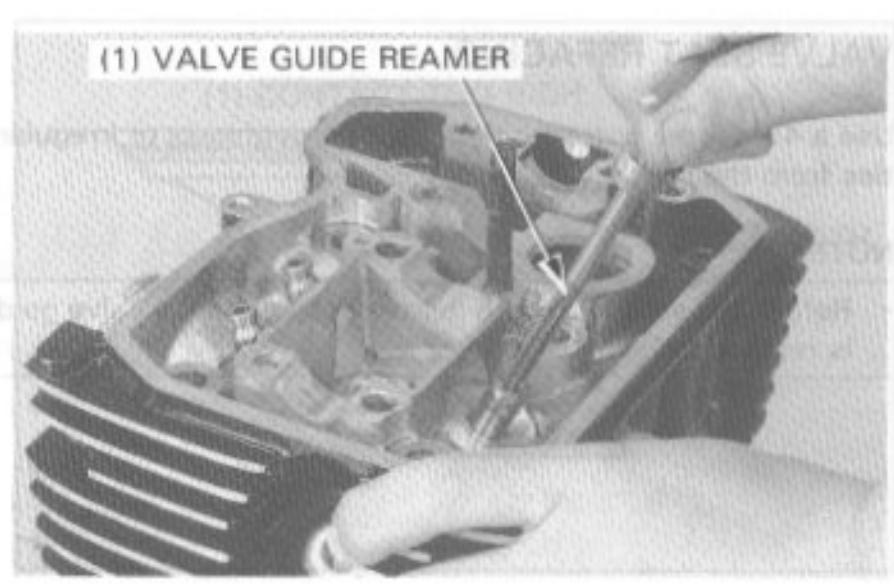

VALVE SEAT INSPECTION/REFACING

Clean the intake and exhaust valves thoroughly to remove carbon deposits.

Apply a light coating of Prussian Blue to each valve seat. Lap each valve and seat using a rubber hose or other hand-lapping tool.

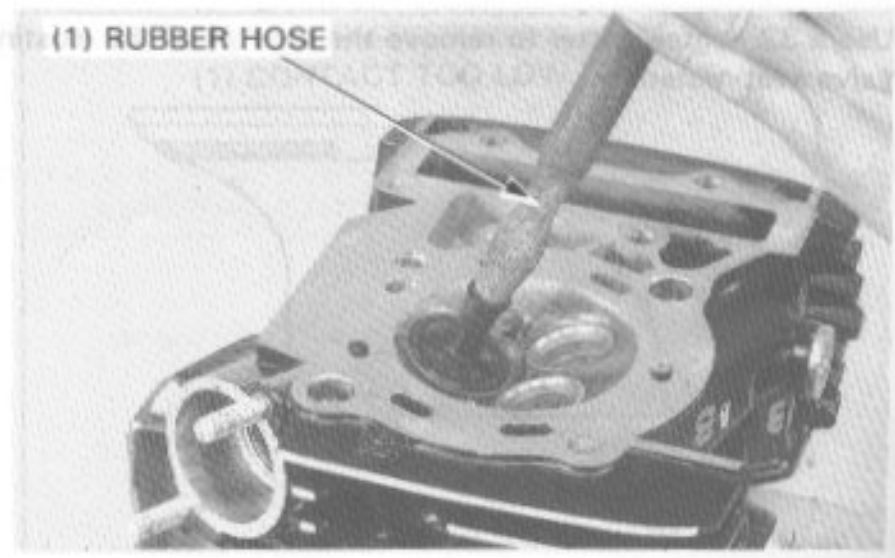

Remove and inspect each valve.

CAUTION

- *The valve cannot be ground. If the valve face is burned or badly worn or if it contacts the seat unevenly, replace the valve.*

Inspect the width of each valve seat as shown.

STANDARD: 0.9–1.1 mm (0.035–0.043 in)
SERVICE LIMIT: 1.5 mm (0.06 in)

If the seat is too wide, too narrow or has low spots, the seat must be ground.

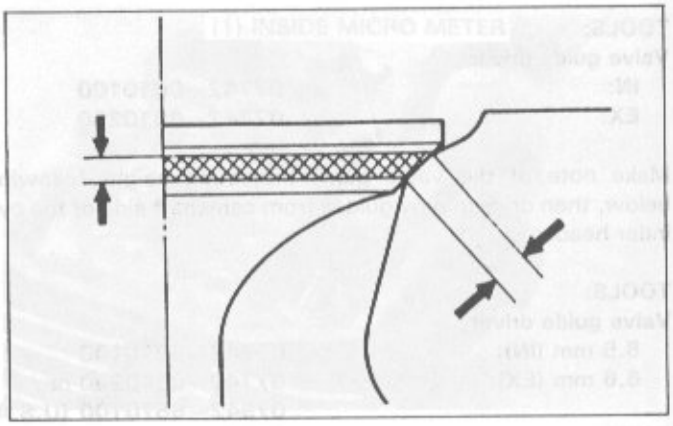

VALVE SEAT CUTTERS

Honda Valve Seat Cutters, grinder or equivalent valve seat refacing equipment are recommended to correct a worn valve seat.

NOTE

- Follow the refacer manufacturer's operating instructions.

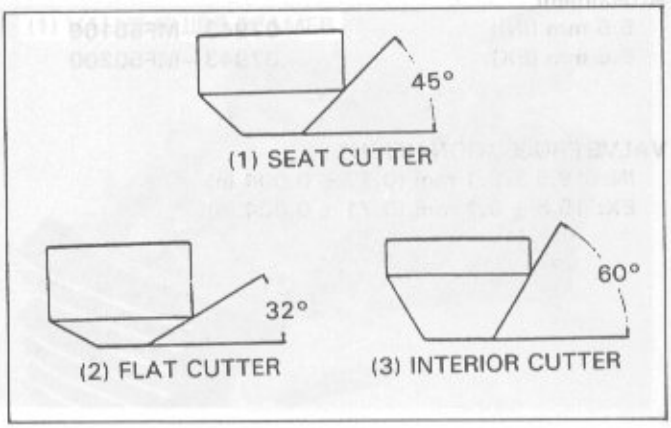

VALVE SEAT REFACING

Use a 45 degree cutter to remove any roughness or irregularities from the seat.

NOTE

- Reface the seat with a 45 degree cutter when a valve guide is replaced.

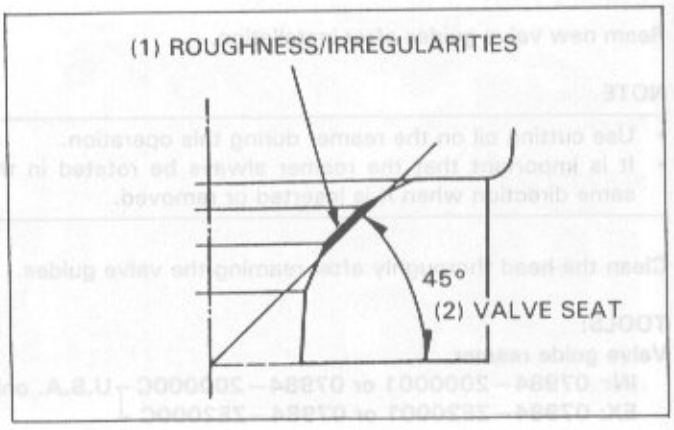

Use a 32 degree cutter to remove the top 1/4 of the existing valve seat material.

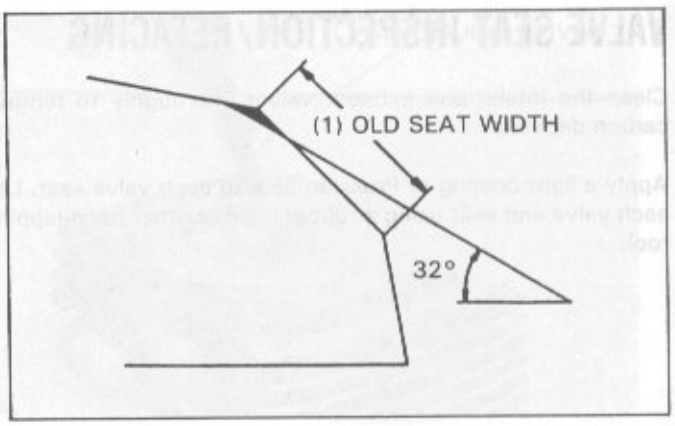

Use a 60 degree cutter to remove the bottom 1/4 of the old seat. Remove the cutter and inspect the area you have refaced.

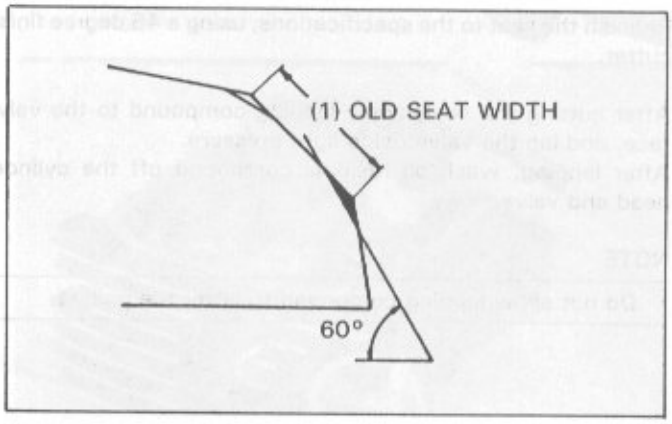

Install a 45 degree finish cutter and cut the seat to the proper width. Make sure that all pitting and irregularities are removed. Refinish if necessary.

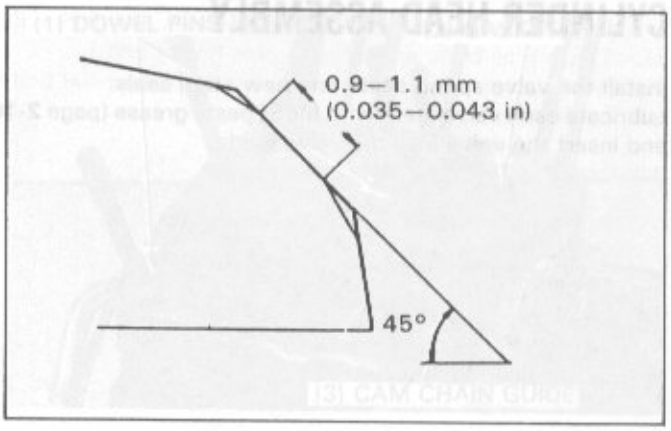

Apply a thin coating of Prussian Blue to the valve seat. Press the valve through the valve guide and onto the seat to make a clear pattern.

NOTE

- The location of the valve seat in relation to the valve face is very important for good sealing.

If the contact area is too high on the valve, the seat must be lowered using a 32 degree flat cutter.

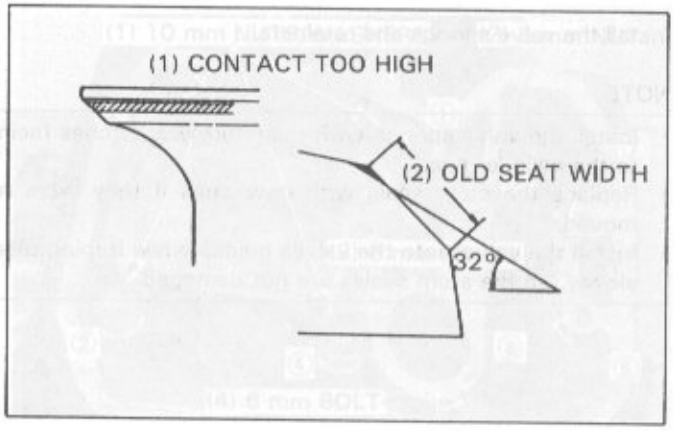

If the contact area is too low on the valve, the seat must be raised using a 60 degree inner cutter.

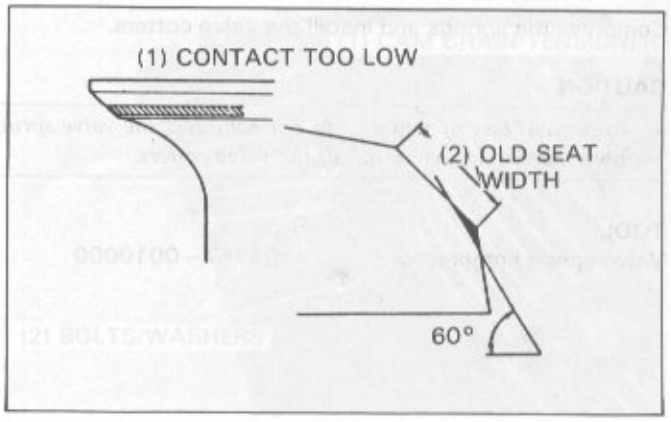

Refinish the seat to the specifications, using a 45 degree finish cutter.

After cutting the seat, apply lapping compound to the valve face, and lap the valve using light pressure.
After lapping, wash all residual compound off the cylinder head and valve.

NOTE

- Do not allow lapping compound to enter the guides.

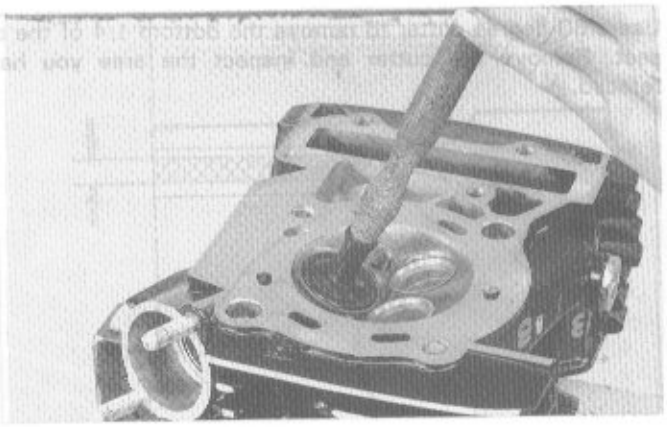

CYLINDER HEAD ASSEMBLY

Install the valve spring seats and new stem seals.
Lubricate each valve stem with MoS_2 paste grease (page 2-10) and insert the valve into the valve guide.

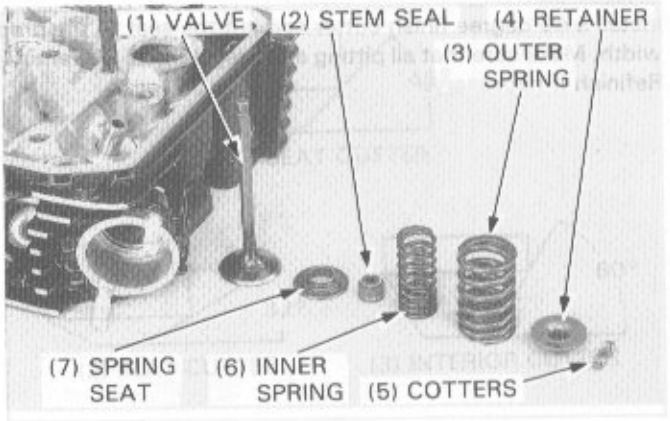

Install the valve springs and retainers.

NOTE

- Install the valve springs with their narrower pitches facing to the cylinder head.
- Replace the stem seals with new ones if they were removed.
- Install the valves into the valves guides while turning them slowly, so the stem seales are not damaged.

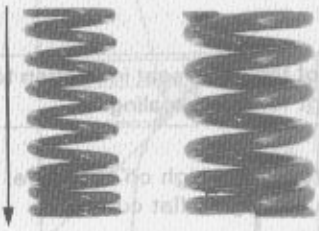

FACING TO CYLINDER HEAD

Compress the springs and install the valve cotters.

CAUTION

- *To prevent loss of tension, do not compress the valve springs more than necessary to install the valve cotters.*

TOOL:
Valve spring compressor **07757—0010000**

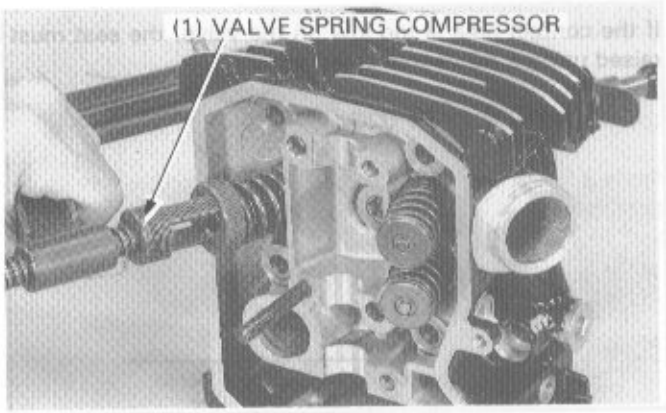

Tap the valve stems gently with a soft hammer to firmly seat the cotters.

NOTE

- Support the cylinder head above the work bench surface to prevent possible valve damage.

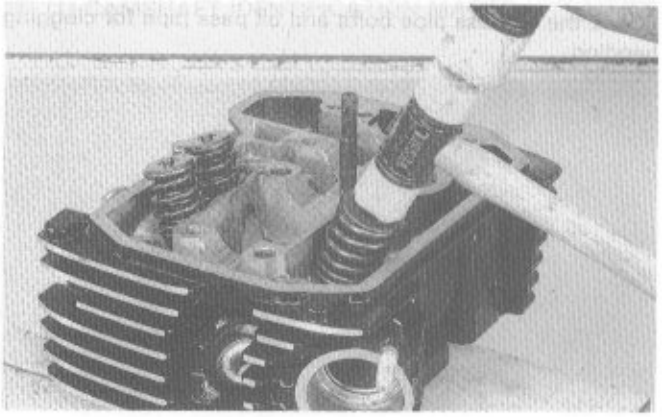

CYLINDER HEAD INSTALLATION

Install the cam chain guide into the cylinder.

Make sure that the cam chain guide bosses are set in the grooves of cylinder.

Clean the cylinder head surface of any gasket material.

Install the dowel pins and a new head gasket.

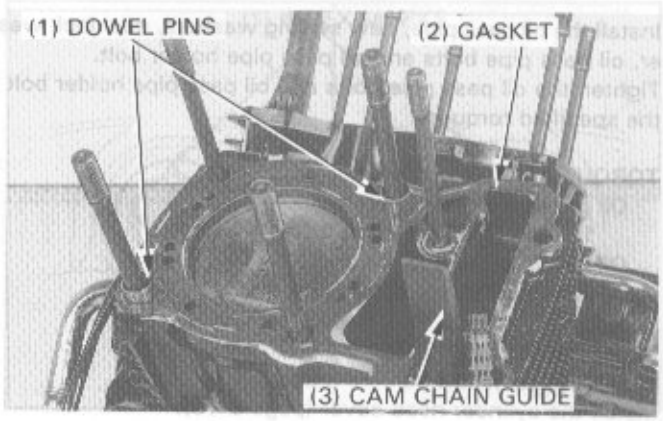

Install the cylinder head.
Install the 10 mm nuts/washers, 8 mm nut, 8 mm bolts and 6 mm bolt and tighten them in a crisscross pattern in 2—3 steps as shown.

TORQUES:
10 mm nut: 48 N·m (4.8 kg-m, 35 ft-lb)
8 mm bolt: 23 N·m (2.3 kg-m, 17 ft-lb)
8 mm nut: 23 N·m (2.3 kg-m, 17 ft-lb)
6 mm bolt: 10 N·m (1.0 kg-m, 7 ft-lb)

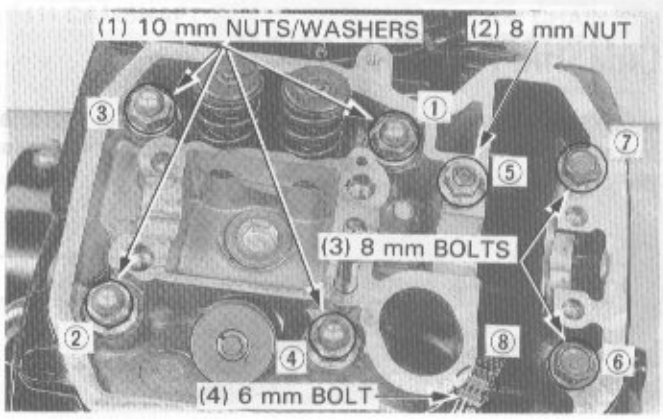

Install the cam chain tensioner into the cylinder head and tighten the mounting bolts with new sealing washers.

TORQUE: 10 N·m (1.0 kg-m, 7 ft-lb)

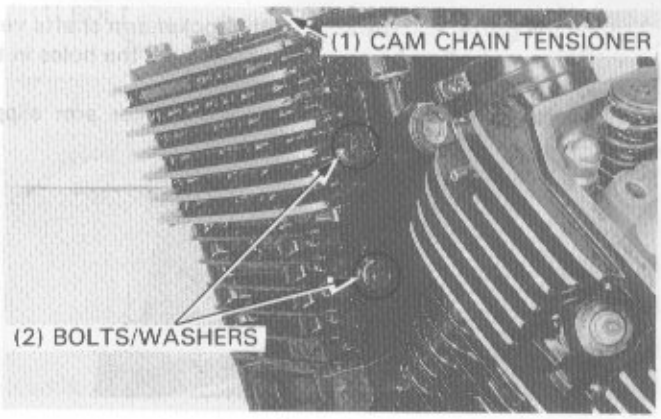

Check the oil pass pipe bolts and oil pass pipe for clogging or bending.

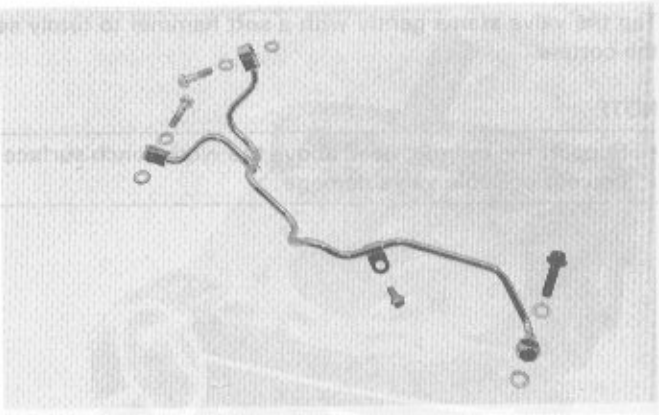

Install the oil pass pipe, new sealing washers, new lock washer, oil pass pipe bolts and oil pass pipe holder bolt.
Tighten the oil pass pipe bolts and oil pass pipe holder bolt to the specified torques.

TORQUES:
Oil pass pipe bolt (7 mm):
10 N·m (1.0 kg-m, 7 ft-lb)
Oil pass pipe bolt (8 mm):
23 N·m (2.3 kg-m, 17 ft-lb)

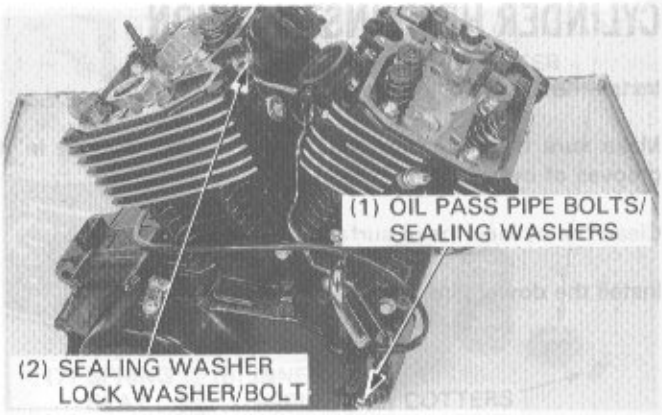

Install the camshaft (page 9-16).
Install the camshaft holders (page 9-19).
Install the cylinder head cover (page 9-19).
Install the engine in the frame (page 6-2).

CAMSHAFT INSTALLATION

Apply MoS_2 paste grease (page 2-10) to the rocker arm shaft.
Install the rocker arms, rocker arm shafts and wave washers to the camshaft holders.

NOTE

- Install the wave washers in the original position.

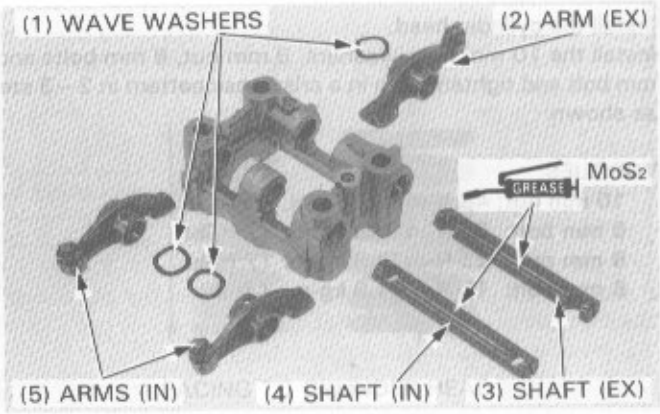

Position the grooves in the ends of the rocker arm shafts vertically, aligning the bolt holes in the holder with the holes in the shafts.
Apply MoS_2 grease (page 2-10) to the rocker arm slipper faces.

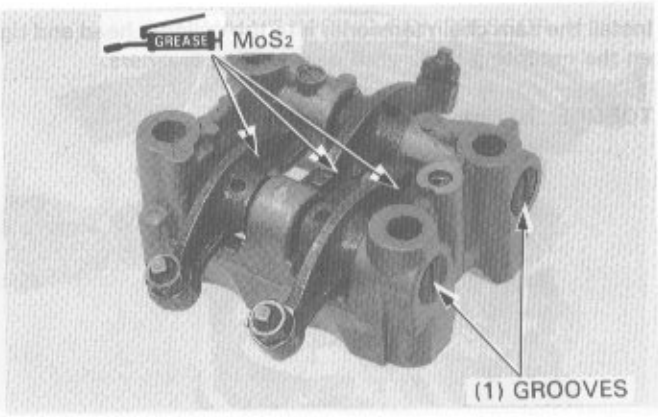

NOTE

- If both the front and rear camshafts were removed, start the installation with front cylinder as described below.
- The camshafts are identified by marks on their flanges:
  "F": Front cylinder camshaft
  "R": Rear cylinder camshaft

FRONT CYLINDER

NOTE

- If the rear cylinder has not been serviced, remove the rear cylinder head cover and check the rear cylinder camshaft position as follows:
  Remove the timing hole cap, turn the crankshaft counter clockwise and align the "RT" mark on the flywheel with the index mark on the right crankcase cover, then check the identification mark on the camshaft flange.
  If the "R" mark on the camshaft flange faces up, turn the cranckshaft counter clockwise 488° (1-1/3 turns) and begin installation of the front camshaft.
  If the "R" mark faces down (cannot be seen), turn the crankshaft counter clockwise 128° (1/3 turns) and begin installation.

Align the "FT" mark on the flywheel with the index mark on the right crankcase cover.

Lubricate the camshaft journal surfaces of the clyinder head with molybdenum disulfide grease.

Install the camshaft on the cylinder head through the cam chain and install the cam sprocket on the camshaft with the timing marks (index lines) facing the outside.

Place the camshaft on its correct position with the "F" mark on the flange facing up.

Align the timing marks (index lines) on the cam sprocket with the top of the cylinder head and place the cam chain on the sprocket.

Install the cam sprocket on the camshaft flange and recheck that the timing marks (index lines) align with the top of the cylinder head.

Align the cam sprocket bolt holes in the cam sprocket and camshaft, install and tighten the cam sprocket bolt.

TORQUE: 23 N·m (2.3 kg-m, 17 ft-lb)

Turn the crankshaft counterclockwise 360° and install the other sprocket bolt.

After installing the front cylinder camshaft turn the crankshaft counterclockwise 592° (approximately 1-2/3 turns) and align the "RT" mark with the index mark on the timing hole, then install the rear cylinder camshaft using the same procedure as for the front cylinder.

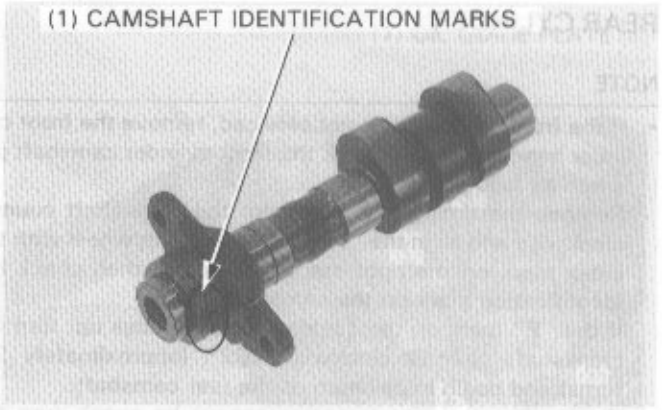

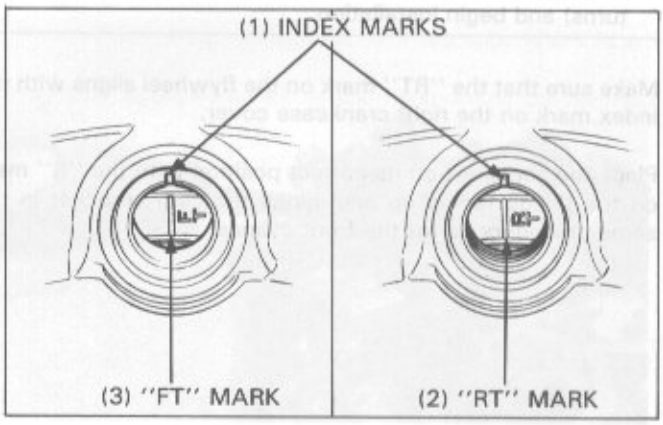

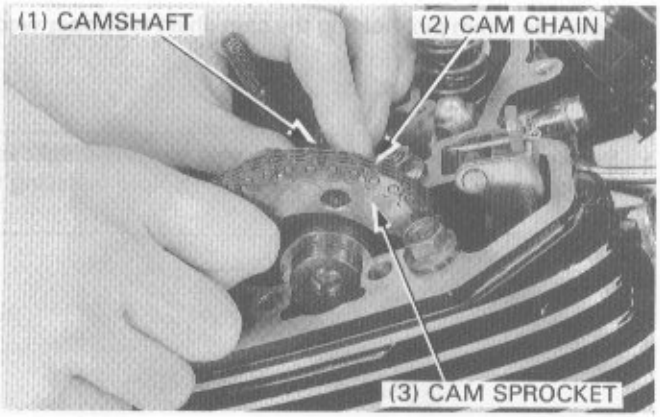

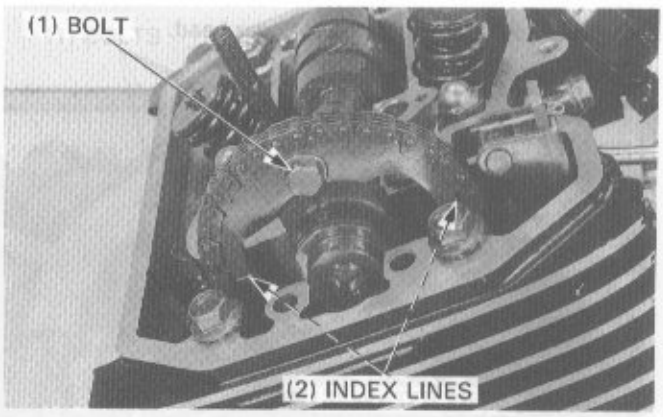

REAR CYLINDER

NOTE

- If the front cylinder was not serviced, remove the front cylinder head cover and check the front cylinder camshaft position as follows:
  Remove the timing hole cap, turn the crankshaft counter clockwise and align the "FT" mark on the flywheel with the index mark on the right crankcase cover, then check the identification mark on the camshaft flange.
  If the "F" mark on the camshaft flange faces up, turn the crankshaft counter clockwise 232° (approximately 2/3 turns) and begin installation of the rear camshaft.
  If the "F" mark faces down (cannot be seen), turn the crankshaft counter clockwise 592° (approximately 1-2/3 turns) and begin installation.

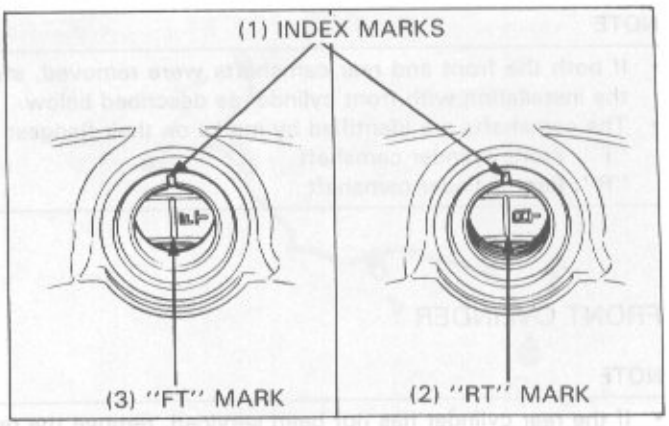

Make sure that the "RT" mark on the flywheel aligns with the index mark on the right crankcase cover.

Place the camshaft on its correct position with the "R" mark on the flange facing up and install the cam sprocket in the same procedure as for the front cylinder.

Remove the 2 mm pin, holding the cam chain tensioner wedge A.

NOTE

- Be careful not to let the 2 mm pin fall into the crankcase.
- Do not forget to remove the 2 mm pin before installing the cylinder head cover.

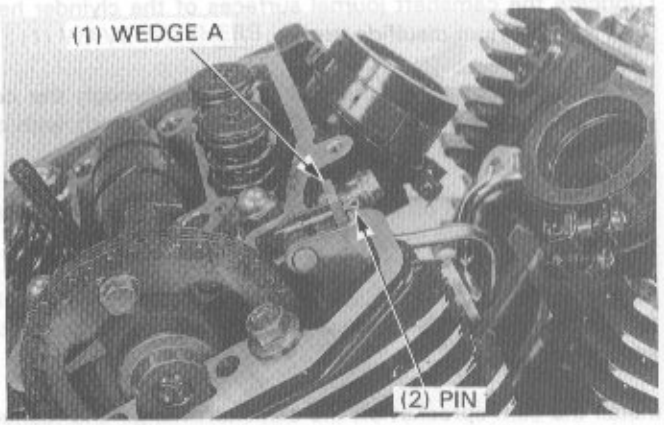

Install the dowel pins into the cylinder head.

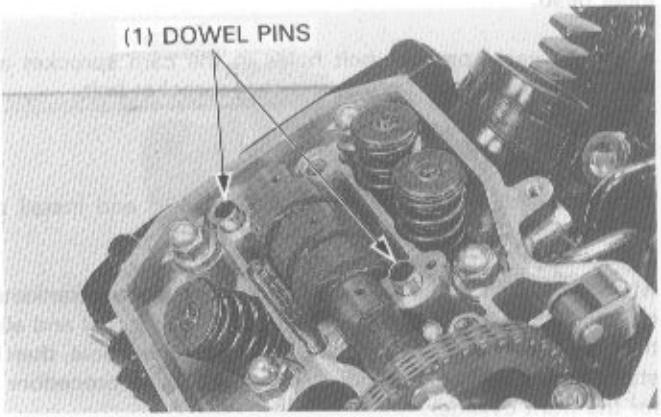

Install the holders, oil guide plate, 8 mm bolts, 8 mm nut and 6 mm bolts.

CAUTION

- *Note the direction of the camshaft holder end, install it with the flat surface on the holder facing in.*

Tighten the camshaft holder mounting bolts and nut in a crisscross pattern in 2—3 steps as shown.

TORQUE:
8 mm bolt: 23 N·m (2.3 kg-m, 17 ft-lb)
8 mm nut: 23 N·m (2.3 kg-m, 17 ft-lb)
6 mm bolt: 10 N·m (1.0 kg-m, 8 ft-lb)

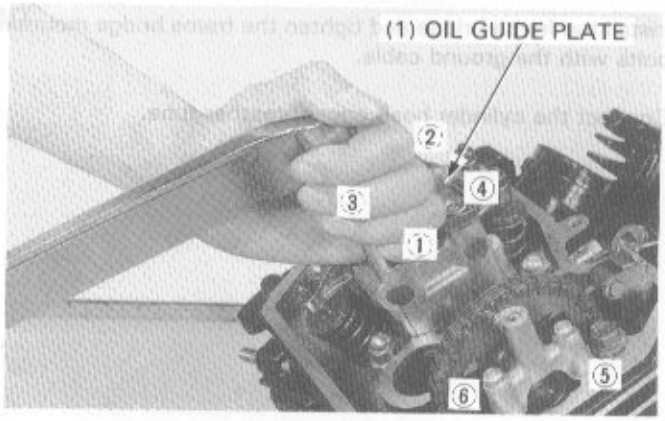

Fill the oil pockets in the head with oil so that the cam lobes are submerged.

Adjust the valve clearance (page 3-7).

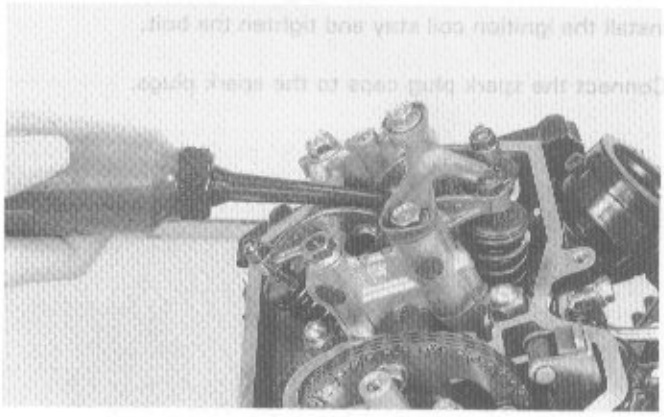

CYLINDER HEAD COVER INSTALLATION

Clean the gasket and apply sealant to the gasket groove of the cylinder head cover.

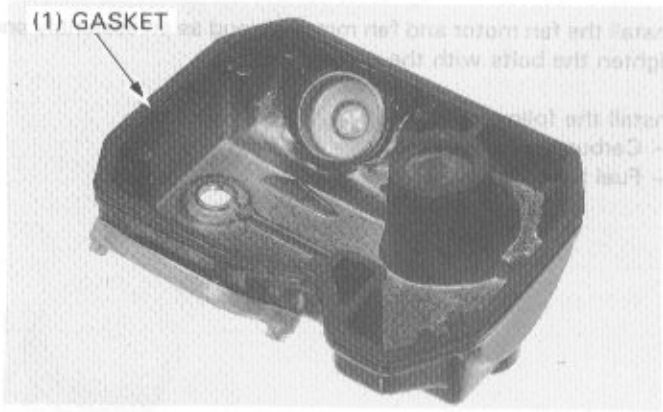

Install the cylinder head cover, rubber washer, washer covers and cylinder head cover bolts.
Tighten the cylinder head mounting bolts to the specified torque.

TORQUE: 10 N·m (1.0 kg-m, 7 ft-lb)

Check the O-ring for wear or damage.
Install the rear water pipe with a new O-ring and tighten the bolt.

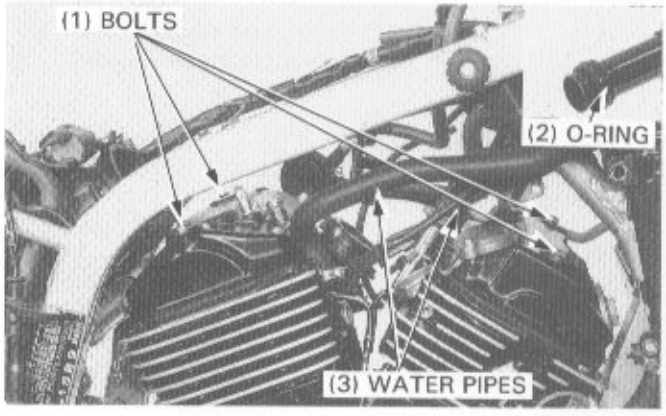

Install the frame bridge and tighten the frame bridge mounting bolts with the ground cable.

Connect the cylinder head cover breather tube.

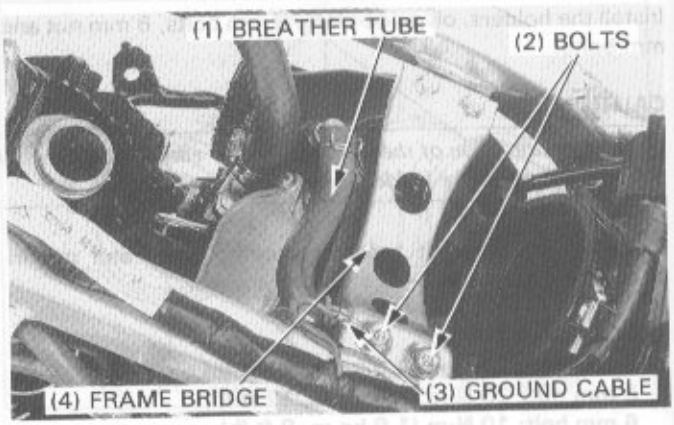

Install the ignition coil stay and tighten the bolt.

Connect the spark plug caps to the spark plugs.

Install the fan motor and fan motor shroud as an assembly and tighten the bolts with the ground cable.

Install the following parts.
- Carburetor (page 4-16).
- Fuel tank (page 4-3).

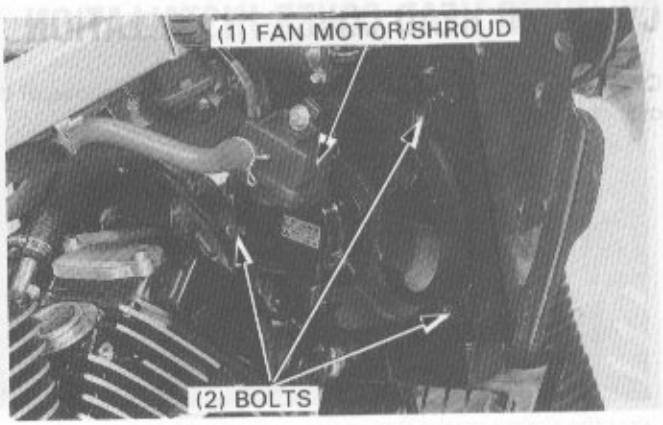

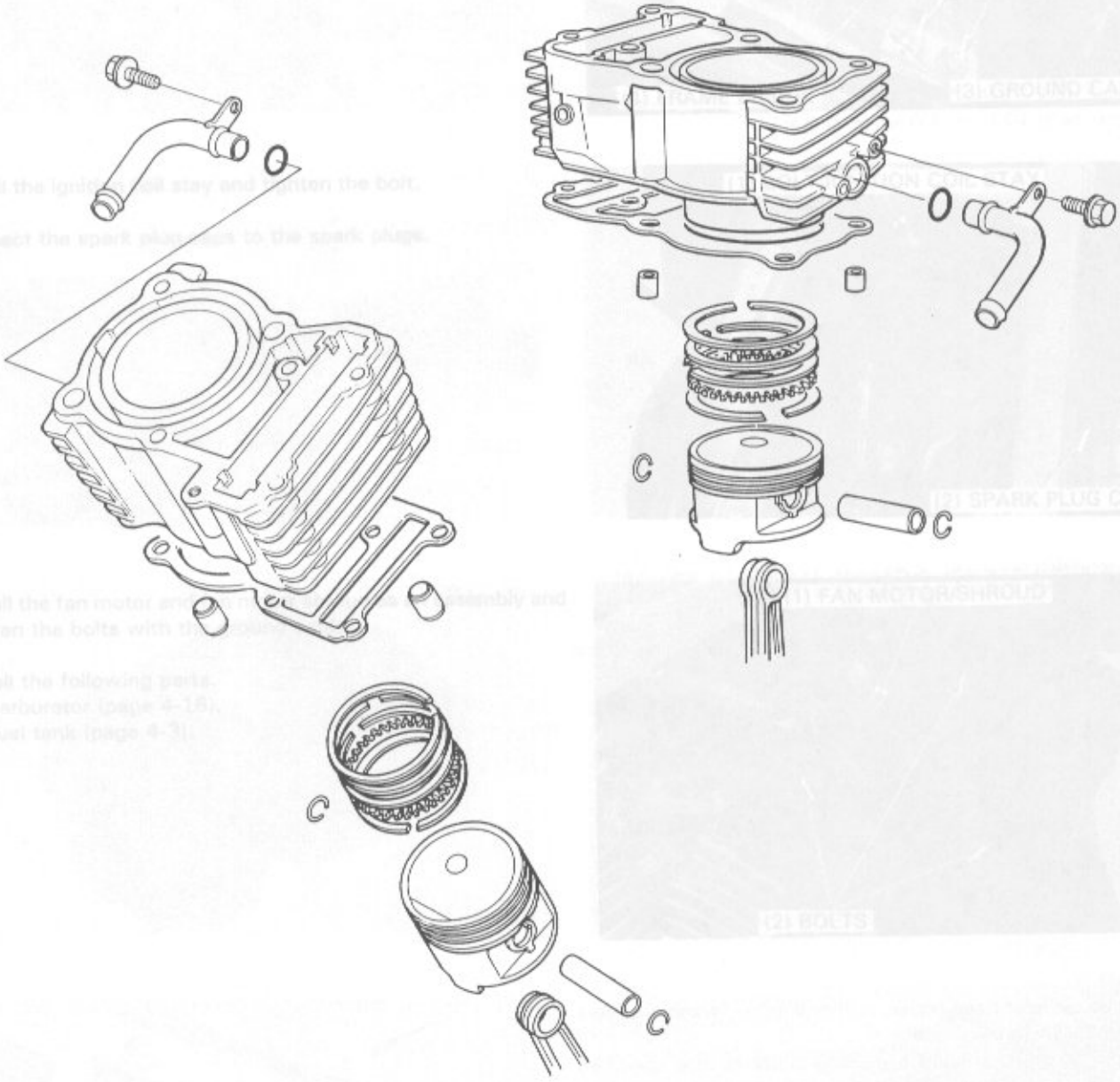
O
O
C
C
C

SERVICE INFORMATION	10-1	PISTON RING INSTALLATION	10-5
TROUBLESHOOTING	10-1	PISTON INSTALLATION	10-5
CYLINDER REMOVAL	10-2	CYLINDER INSTALLATION	10-6
PISTON REMOVAL	10-3		

SERVICE INFORMATION

GENERAL

- This section covers service of the cylinder and piston. These procedures can only be performed with the engine removed from the frame.

SPECIFICATIONS

mm (in)

ITEM			STANDARD	SERVICE LIMIT
Cylinder	I.D.		75.000–75.015 (2.9528–2.9533)	75.17 (2.959)
	Warpage across top		—	0.10 (0.004)
	Taper		—	0.05 (0.002)
	Out-of-round		—	0.05 (0.002)
Piston, piston rings and piston pin	Piston ring-to-ring groove clearance	TOP	0.015–0.045 (0.0006–0.0018)	0.10 (0.004)
		SECOND	0.015–0.045 (0.0006–0.0018)	0.10 (0.004)
	Ring end gap	TOP	0.10–0.30 (0.004–0.012)	0.50 (0.020)
		SECOND	0.10–0.30 (0.004–0.012)	0.50 (0.020)
		OIL	0.20–0.70 (0.008–0.028)	0.90 (0.035)
	Piston O.D.		74.965–74.990 (2.9514–2.9524)	74.84 (2.946)
	Piston pin bore		18.002–18.008 (0.7087–0.7090)	18.05 (0.711)
	Connecting rod small end I.D.		18.016–18.034 (0.7093–0.7100)	18.09 (0.712)
	Piston pin O.D.		17.994–18.000 (0.7084–0.7087)	17.80 (0.701)
	Piston-to-piston pin clearance		0.002–0.014 (0.0001–0.0006)	0.25 (0.010)
	Cylinder-to-piston clearance		0.010–0.050 (0.0004–0.0020)	0.32 (0.013)
	Piston pin-to-connecting rod small end clearance		0.016–0.040 (0.0006–0.0016)	0.29 (0.011)

TROUBLESHOOTING

Low or uneven compression
- Worn cylinder or piston rings.
- Leaking head gasket.
- Incorrect valve timing.

Excessive smoke
- Worn cylinder and piston rings.
- Improperly installed piston rings.
- Damaged piston or cylinder.

Overheating
- Excessive carbon deposits on piston or combustion chamber.
- Faulty water pump.

Piston noise
- Worn cylinder and piston.
- Excessive carbon deposits.

CYLINDER REMOVAL

Remove the cylinder heads (Refer to Section 9).

Remove the gaskets and dowel pins and the cam chain guides.

Remove the cylinder.

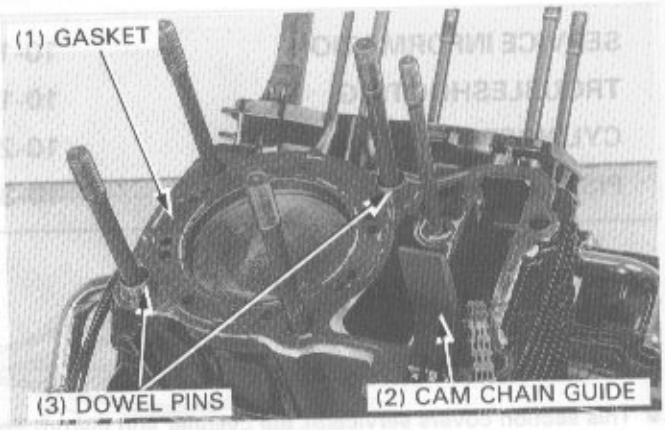

Remove the gaskets and dowel pins.

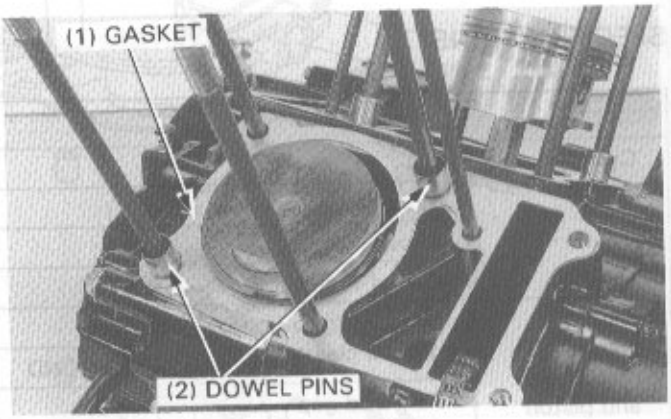

CYLINDER INSPECTION

Inspect the cylinder walls for scratches and wear.

Measure and record the cylinder I.D. at three levels in both an X and Y axis. Take the maximum reading to determine the cylinder wear.

SERVICE LIMIT: 75.17 mm (2.959 in)

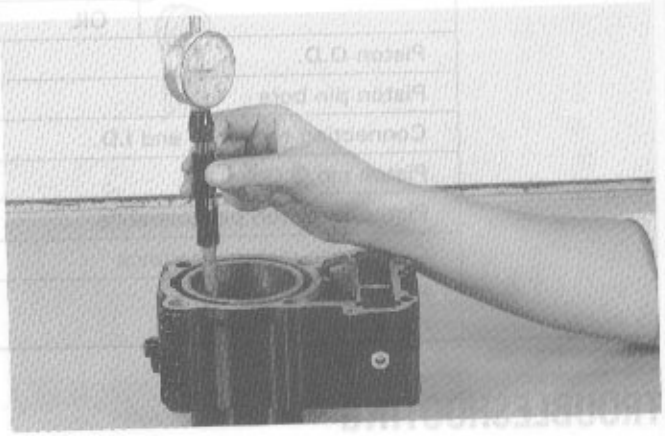

Calculate the cylinder for taper at three levels in an X and Y axis. Take the maximum reading to determine the taper.

SERVICE LIMIT: 0.05 mm (0.002 in)

Calculate the cylinder for out-of-round at three levels in an X and Y axis. Take the maximum reading to determine the out-of-round.

SERVICE LIMIT: 0.05 mm (0.002 in)

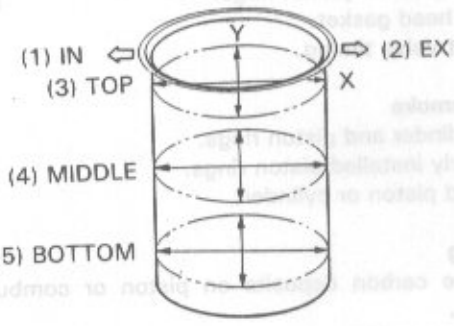

The cylinder must be rebored and oversize piston fitted if the service limits are exceeded.

The following oversize piston are available:
0.25 mm (0.010 in) and 0.50 mm (0.020 in)

The cylinder must be rebored so that the clearance to an oversize piston is 0.010—0.050 mm (0.0004—0.0020 in)

CYLINDER WARPAGE INSPECTION

Clean the cylinder gasket surface.
Inspect the cylinders for transverse warpage across the top.

NOTE

- Measure warpage using a straight edge and feeler gauge in the directions shown.

SERVICE LIMIT: 0.10 mm (0.004 in)

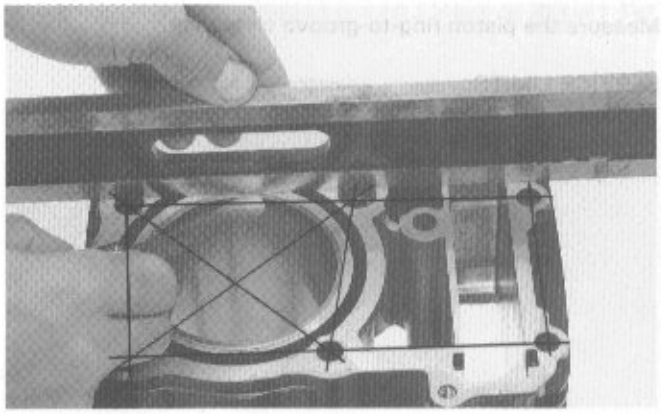

PISTON REMOVAL

Place a shop towel into the crankcase and remove the piston pin clips.

NOTE

- Do not let the clips fall into the crankcase.

Push the piston pin out and remove the piston.

PISTON/PISTON RING INSPECTION

Remove the piston rings and mark them to indicate the correct cylinder and piston position for reassembly.

Inspect the piston for cracks or other damage and the ring grooves for excessive wear or carbon built-up.

NOTE

- Do not damage the piston rings when removing them.

Measure the piston O.D.

NOTE

- Take measurements 10 mm (0.4 in) from the bottom, and 90° to the piston pin hole.

SERVICE LIMIT: 74.84 mm (2.946 in)

Calculate the piston-to-cylinder clearance by subtracting the piston O.D. from the cylinder I.D. (page 10-2)

SERVICE LIMIT: 0.32 mm (0.013 in)

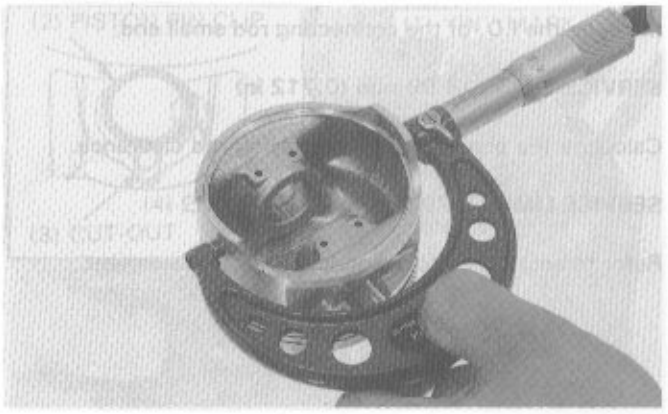

Measure the piston ring-to-groove clearance.

SERVICE LIMITS:
Top: 0.10 mm (0.004 in)
Second: 0.10 mm (0.004 in)

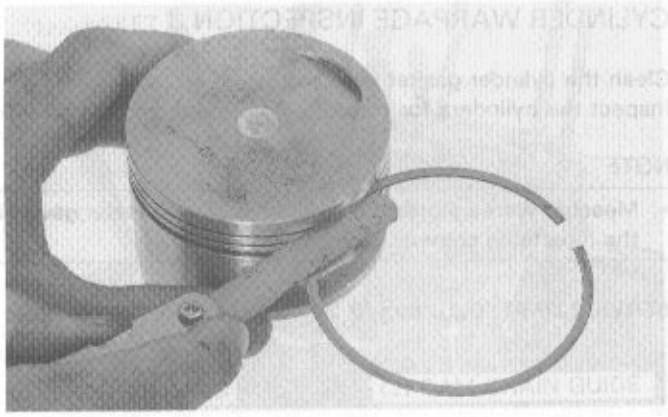

Measure the top and second piston ring end gaps; using a piston, push the ring into the cylinder squarely and make the measurement.

SERVICE LIMITS:
Top/Second: 0.50 mm (0.020 in)
Oil: 0.90 mm (0.035 in)

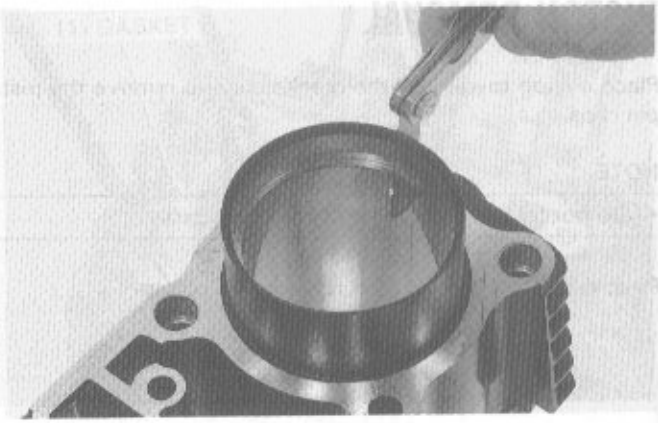

Measure each piston pin bore.

SERVICE LIMIT: 18.05 mm (0.711 in)

Measure each piston pin O.D.

SERVICE LIMIT: 17.80 mm (0.701 in)

Calculate the piston pin to piston clearance.

SERVICE LIMIT: 0.25 mm (0.010 in)

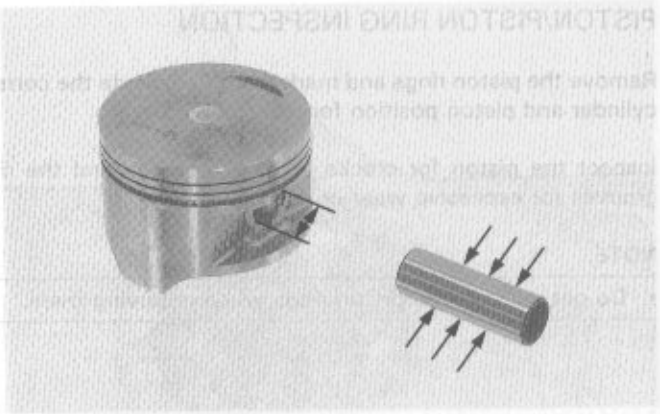

Measure the I.D. of the connecting rod small end.

SERVICE LIMIT: 18.09 mm (0.712 in)

Calculate the piston pin to connecting rod clearance.

SERVICE LIMIT: 0.29 mm (0.011 in)

Refer to section 11 for connecting rod replacement.

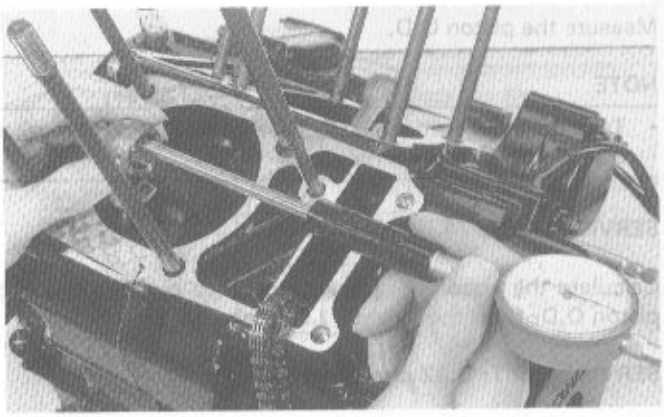

PISTON RING INSTALLATION

Clean the piston domes, ring lands, and skirts.

NOTE

- Insert the outside surface of the ring into the proper ring groove and roll it around in the groove to make sure that the ring has a free fit around the piston's circumference.

Carefully install the piston rings onto the piston with the markings facing up.

NOTE

- Be careful not to damage the piston and piston rings during assembly.

Stagger the ring end gaps 180° apart from each other as shown.

NOTE

- To install the oil ring, install the spacer first, then install the side rails.

After installing the rings, check that they rotate freely without sticking.

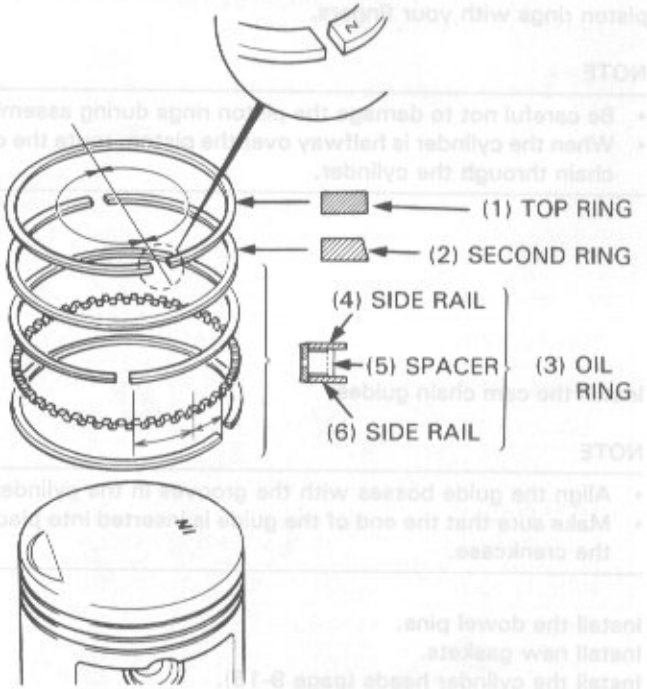

PISTON INSTALLATION

Place a shop towel into the crankcase.
Coat the rod small end with molybdenum disulfide grease.
Assemble the piston and connecting rod with the piston and new piston pin clips as shown.

NOTE

- Install the pistons with the "IN" marks on the intake valve side.
- Be sure to install the pistons in their original positions as noted during removal.
- After installing the piston pin clips, make sure that they are seated properly and the end gaps are not aligned with the cut-out in the piston.
- Do not let the piston pin clips fall into the crankcase.

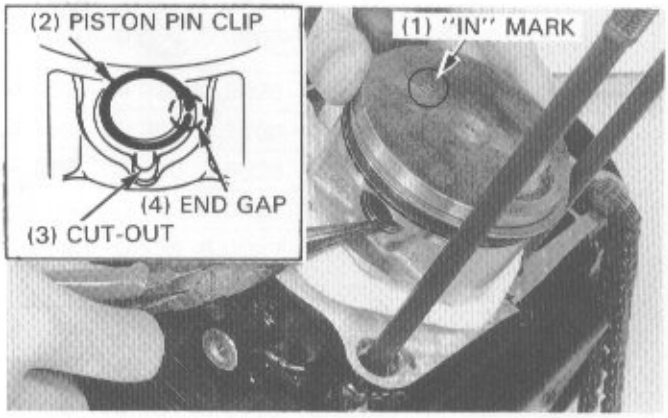

CYLINDER INSTALLATION

Install the dowel pins and new gaskets.

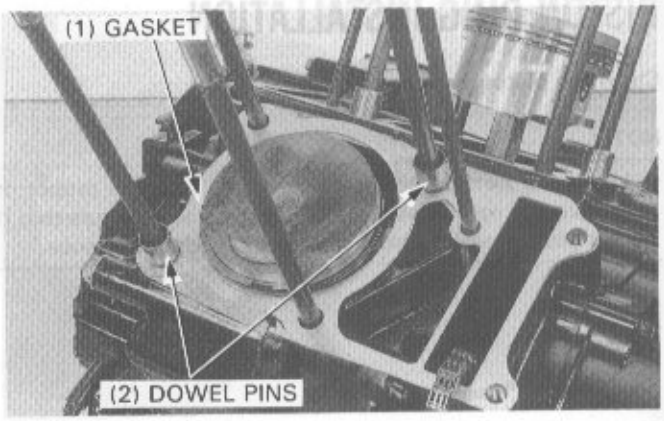

Coat the cylinders, piston rings/grooves and pistons with oil.

Slide the cylinders over the pistons while compressing the piston rings with your fingers.

NOTE

- Be careful not to damage the piston rings during assembly.
- When the cylinder is halfway over the piston, route the cam chain through the cylinder.

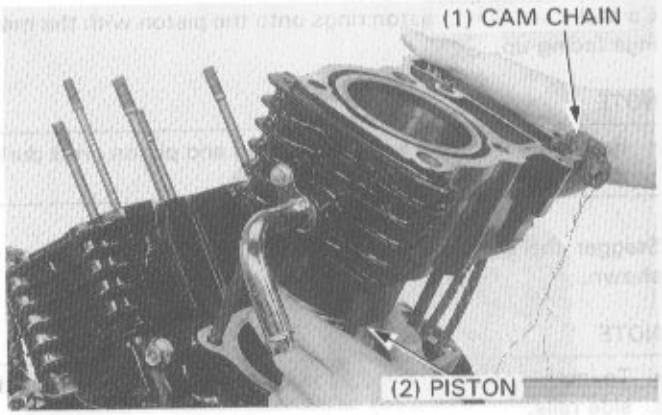

Install the cam chain guides.

NOTE

- Align the guide bosses with the grooves in the cylinders.
- Make sure that the end of the guide is inserted into place in the crankcase.

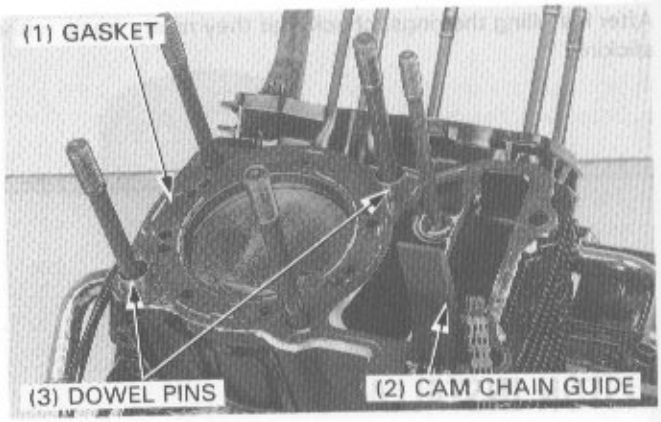

Install the dowel pins.
Install new gaskets.
Install the cylinder heads (page 9-15).

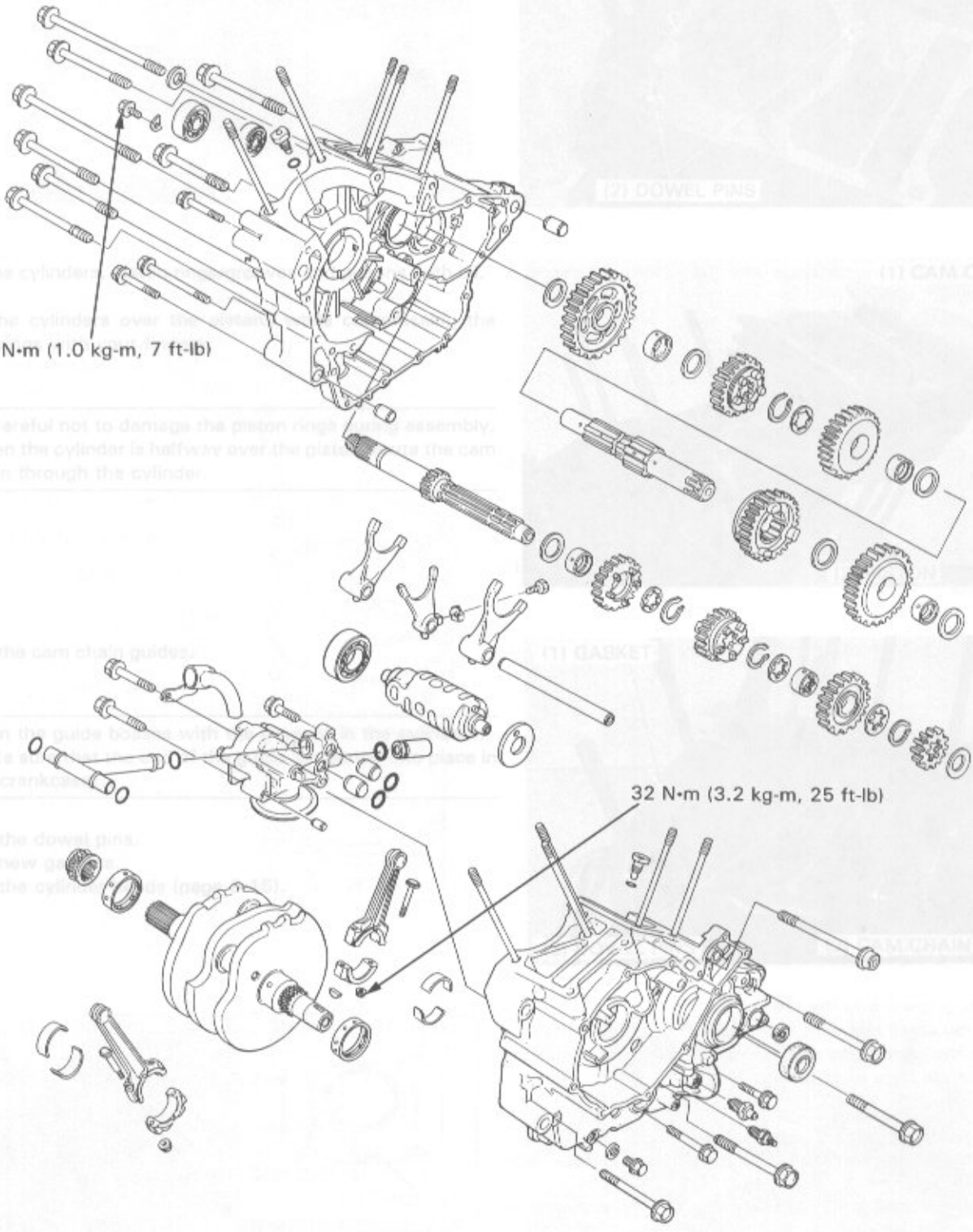
10 N·m (1.0 kg-m, 7 ft-lb)
32 N·m (3.2 kg-m, 25 ft-lb)

11. CRANKSHAFT/TRANSMISSION

SERVICE INFORMATION	11-1	CONNECTING ROD/CRANKSHAFT INSTALLATION	11-9
TROUBLESHOOTING	11-2	TRANSMISSION REMOVAL	11-10
CRANKCASE SEPARATION	11-3	CRANKCASE BEARING REPLACEMENT	11-12
CRANKSHAFT/CONNECTING ROD REMOVAL	11-4	TRANSMISSION INSTALLATION	11-14
CRANKPIN BEARING	11-5	CRANKCASE ASSEMBLY	11-15
MAIN BEARING	11-7		

SERVICE INFORMATION

GENERAL

- To service the connecting rods, crankshaft and transmission, the crankcase must be separated.
- All bearing inserts are select fitted and are identified by color code. Select replacement bearings from the code tables. After installing new bearings, recheck them with plastigauge to verify oil clearance.
- Apply molybdenum disulfide grease to the main journals and crankpins during assembly.
- To service the connecting rods, crankshaft and transmission, the engine must be removed from the frame (page 6-2) and the crankcases must be separated.
- Before separating the crankcase, the following parts must be removed.
  - Cylinder head (Section 9)
  - Cylinder/piston (Section 10)
  - Clutch/gearshift linkage (Section 7)
  - Flywheel (Section 8)
  - Starter motor (Section 18)
  - Water pump (Section 5)

11

SPECIFICATIONS

mm (in)

ITEM			STANDARD	SERVICE LIMIT
Crankshaft/ connecting rod	Connecting rod big end side clearance		0.05–0.20 (0.002–0.008)	0.40 (0.016)
	Crankpin oil clearance		0.028–0.052 (0.0011–0.0020)	0.07 (0.003)
	Main journal oil clearance		0.025–0.041 (0.0010–0.0016)	0.06 (0.002)
	Crankshaft runout		—	0.05 (0.002)
Transmission	Gear I.D.	C1	24.000–24.021 (0.9449–0.9457)	24.04 (0.947)
		M4, M5, C2, C3	28.000–28.021 (1.1024–1.1032)	28.04 (1.104)
	Gear bushing O.D.	C1	23.959–23.980 (0.9433–0.9441)	24.94 (0.982)
		M4, M5, C2, C3	27.959–27.980 (1.1007–1.1016)	27.94 (1.100)
	Gear bushing I.D.	C1	20.016–20.037 (0.7880–0.7889)	20.06 (0.790)
		M4, C2, C3	25.000–25.021 (0.9843–0.9851)	25.04 (0.986)
	Bushing-to-shaft clearance	M4, C2, C3	0.005–0.047 (0.0002–0.019)	0.06 (0.002)
	Gear-to-bushing clearance	M4, M5, C1, C2, C3	0.020–0.062 (0.0008–0.0024)	0.10 (0.004)
	Mainshaft O.D.	M4 bushing	24.959–24.980 (0.9826–0.9835)	24.90 (0.980)
	Countershaft O.D.	C1 bushing	19.980–19.993 (0.7866–0.7871)	19.92 (0.784)
		C2, C3 bushings	24.959–24.980 (0.9826–0.9835)	24.90 (0.980)
	Backlash	1st	0.089–0.170 (0.0035–0.0067)	0.24 (0.009)
		2nd, 3rd, 4th, 5th	0.068–0.136 (0.0027–0.0054)	0.18 (0.007)
Shift fork/ fork-shaft	Claw thickness		5.93–6.00 (0.233–0.236)	5.63 (0.222)
	Right and left shift fork I.D.		13.000–13.018 (0.5118–0.5125)	13.04 (0.513)
	Shaft O.D.		12.966–12.984 (0.5105–0.5112)	12.90 (0.508)
Shift drum O.D. (at the left side journal)			13.966–13.984 (0.5498–0.5506)	13.90 (0.547)

TORQUE VALUES

Connecting rod	34 N·m (3.4 kg-m, 25 ft-lb)
Bearing set plate	10 N·m (1.0 kg-m, 7 ft-lb) Apply locking agent.

TOOLS

Special		
Bearing remover set	07936–3710001	Not available in U.S.A.
— remover handle	07936–3710100	
— bearing remover set	07936–3710600	
— remover sliding weight	07741–0010201 or	
— remover weight	07936–3710200	
Bearing driver attachment	07HMF–MM90400	
Common		
Driver	07749–0010000	
Attachment, 42 x 47 mm	07746–0010300	
Attachment, 52 x 55 mm	07746–0010400	
Pilot, 20 mm	07746–0040500	
Pilot, 22 mm	07746–0041000	
Pilot, 25 mm	07746–0040600	

TROUBLESHOOTING

Excessive noise
- Crankshaft
  - Worn main bearing
  - Worn crankpin bearing
- Connecting rod
  - Worn rod small end
  - Worn crankpin bearing

Hard to shift
- Shift forks bent
- Shift fork shaft bent
- Shift spindle claw bent
- Shift drum cam grooves damaged
- Shift fork guide pin damaged

Transmission jumps out of gear
- Gear dogs worn
- Shift shaft bent
- Shift forks bent

CRANKCASE SEPARATION

Remove the engine from the frame (Section 6).

Refer to the service information (page 11-1) for the parts that must be removed before the separating the crankcase.

Remove the bolt and bearing set plate.
Remove the rear cam chain and cam chain drive sprocket.

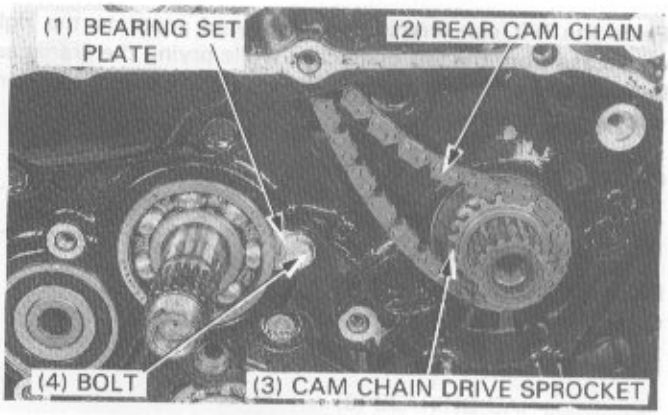

Remove the bolt and cam chain tensioner set plate.
Remove the front cam chain from the crankshaft.

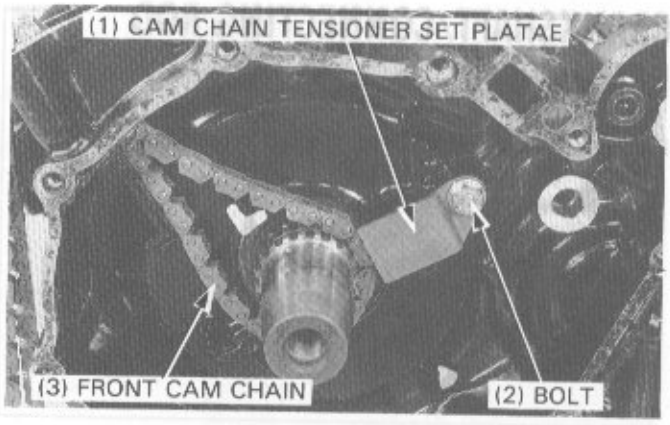

Disconnect the neutral switch wire and oil pressure switch wire by removing the nut and bolt with the clamp.
Remove the 8 mm bolts and 6 mm bolts from the left crankcase.

NOTE

- Remove the bolts in a crisscross pattern in 2–3 steps.
- Loosen the 6 mm bolts first, then the 8 mm bolts.

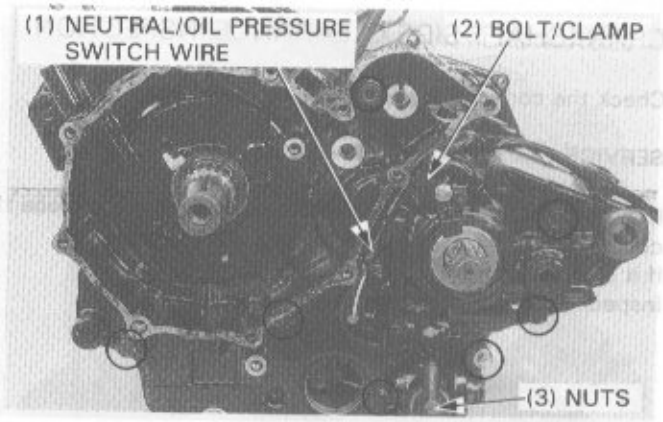

Remove the 8 mm bolts and 6 mm bolts from the right crankcase.

NOTE

- Remove the bolts in a crisscross pattern in 2–3 steps.
- Loosen the 6 mm bolts first, then the 8 mm bolts.

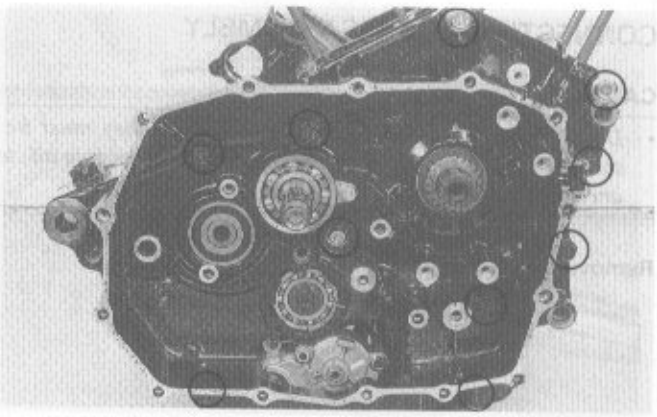

Place the left side crankcase down and separate the right crankcase from the left crankcase while prying the crankcase halves as shown and tapping the cases at several locations with a soft hammer.

CAUTION

- *Do not damage the crankcase mating surfaces with prying.*

Remove the dowel pins.
Clean the crankcase mating surfaces thoroughly.

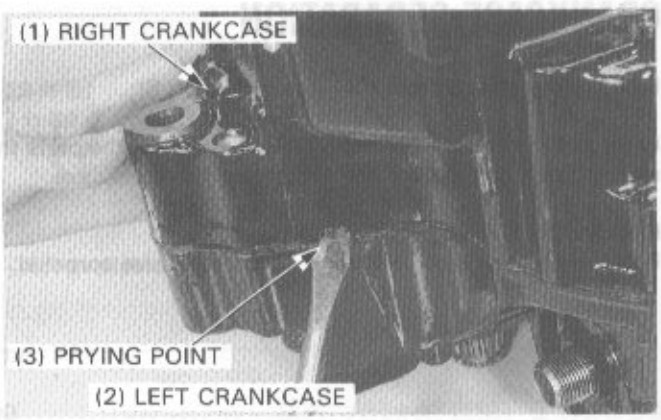

CRANKSHAFT/CONNECTING ROD REMOVAL

Remove the crankshaft from the left crankcase.

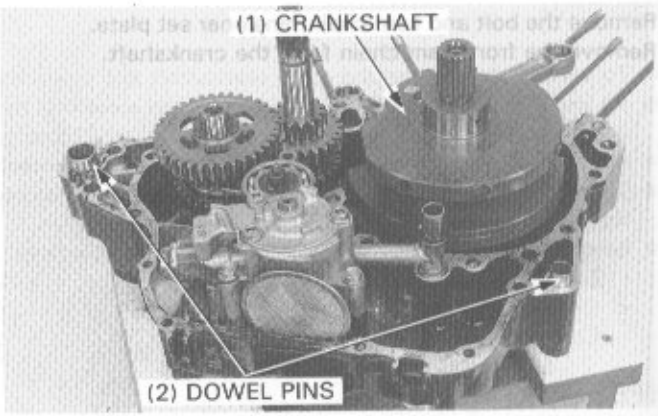

CRANKSHAFT SIDE CLEARANCE INSPECTION

Check the connecting rod side clearances.

SERVICE LIMIT: 0.40 mm (0.016 in)

If either side clearance exceeds the service limit, replace the connecting rod and recheck.
If it is still beyond the limit, replace the crankshaft.
Inspect the crankshaft for rough spots or damage.

CONNECTING ROD DISASSEMBLY

CAUTION

- *Do not interchange the crankpin bearings. They must be installed in their original positions or the correct bearing oil clearance may not be obtained causing engine damage.*

Remove the bearing cap nuts and bearing caps.

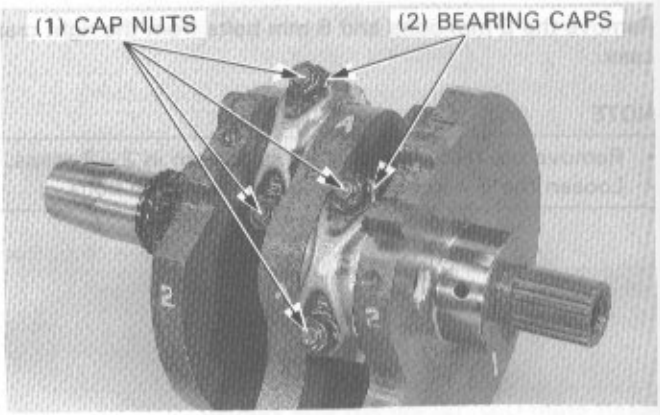

Mark the disassembled connecting rods and bearing caps to ensure reinstallation in their original positions.

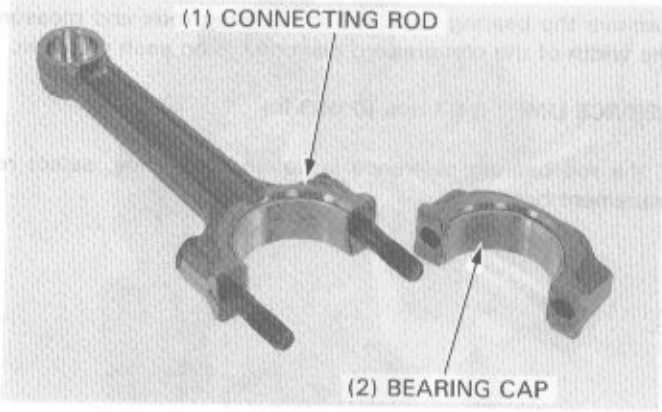

CRANKSHAFT RUNOUT INSPECTION

Support the crankshaft center as shown and set a dial indicator on the center main bearing journal. Rotate the crankshaft two revolutions and read the runout.

SERVICE LIMIT: 0.05 mm (0.002 in)

NOTE

- The crankshaft cannot be repaired. Replace it if the journals or crankpins are burnt, cracked, or if the runout is beyond the service limit.

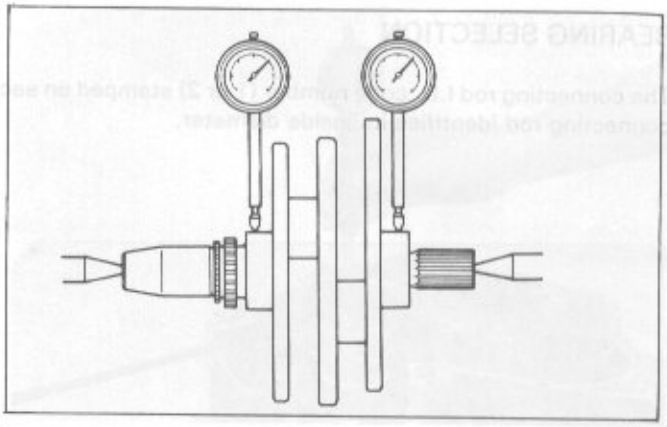

CRANKPIN BEARING

OIL CLEARANCE INSPECTION

Inspect the crankpin bearings for unusual wear or damage.
Wipe all oil off the crankpin bearings and crankpins.
Put a piece of plastigauge on each crankpin.

NOTE

- Do not put the plastigauge over the oil hole in the crankpin.

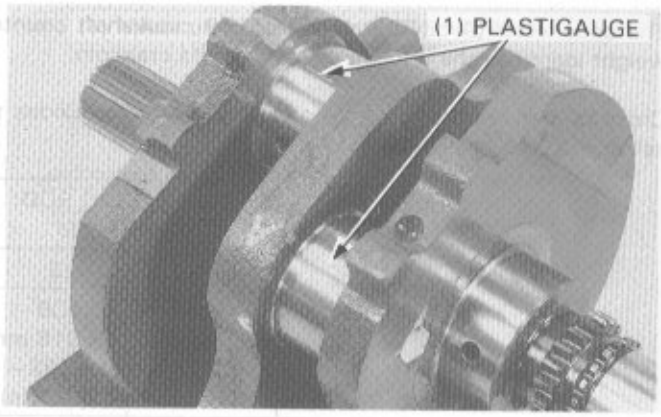

Install the bearing caps and connecting rods to the correct crankpins and tighten the bearing cap nuts to the specified torque.

TORQUE: 34 N·m (3.4 kg-m, 25 ft-lb)

NOTE

- Do not rotate the crankshaft and connecting rods during installation.

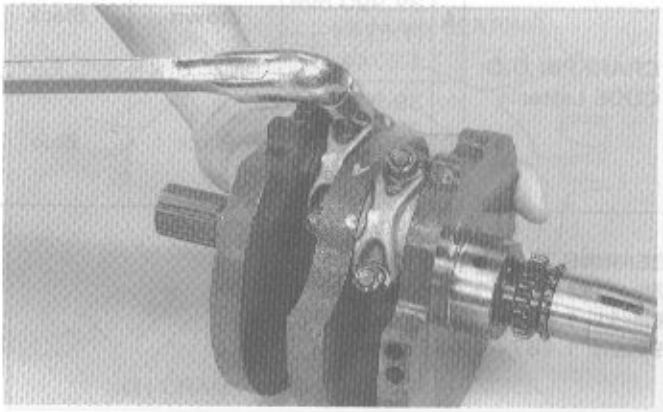

Remove the bearing caps and connecting rods and measure the width of the compressed plastigauge on each crankpin.

SERVICE LIMIT: 0.07 mm (0.003 in)

If the rod bearing clearance is beyond tolerance, select replacement bearings.

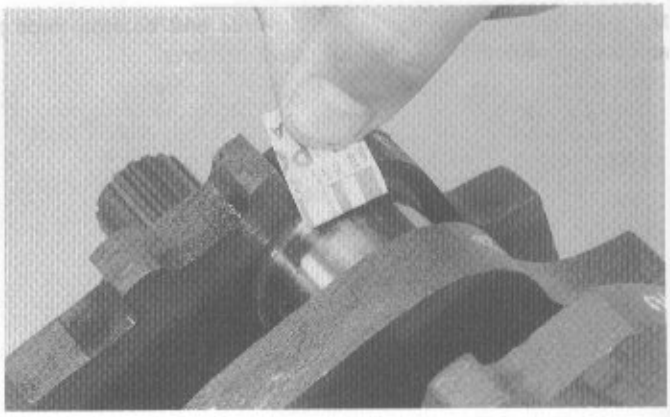

BEARING SELECTION

The connecting rod I.D. code number (1 or 2) stamped on each connecting rod identifies its inside diameter.

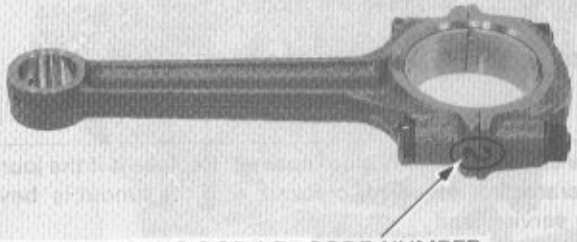

(1) CONNECTNG ROD I.D. CODE NUMBER

The code letter (A or B) stamped on the crankshaft counter weight identifies the outside diameter of its crankpin.

Cross references the crankpin and connecting rod codes to select the correct replacement bearing.

			CONNECTING ROD I.D. CODE No.	
			1	2
			43.000–43.008 mm (1.6929–1.6932 in)	43.008–43.016 mm (1.6932–1.6935 in)
CRANKPIN O.D. CODE Letter	A	39.982–39.990 mm (1.5741–1.5744 in)	Brown	Black
	B	39.974–39.982 mm (1.5738–1.5741 in)	Black	Blue

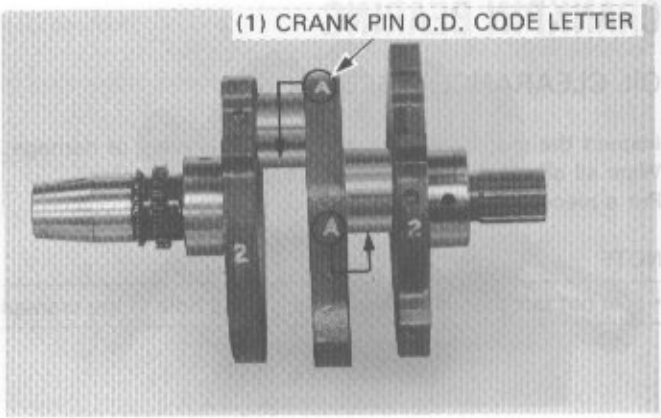

(1) CRANK PIN O.D. CODE LETTER

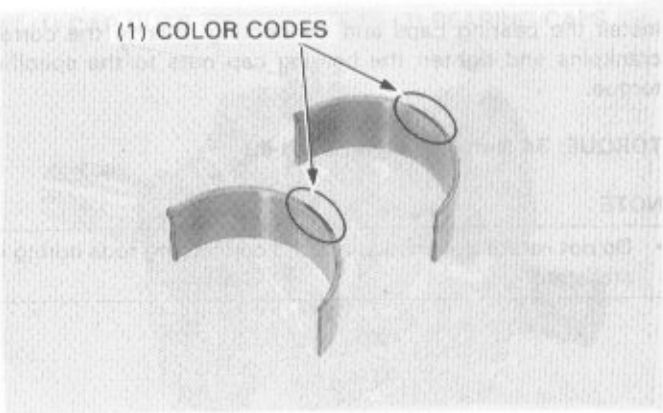

(1) COLOR CODES

BEARING THICKNESS
Blue: 1.495–1.499 mm
Black: 1.491–1.495 mm
Blown: 1.487–1.491 mm

MAIN BEARING

OIL CLEARANCE INSPECTION

Inspect the main journal visually for unusual wear.
Wipe all oil off the main journal, and measure and note the O.D. of the main journal.

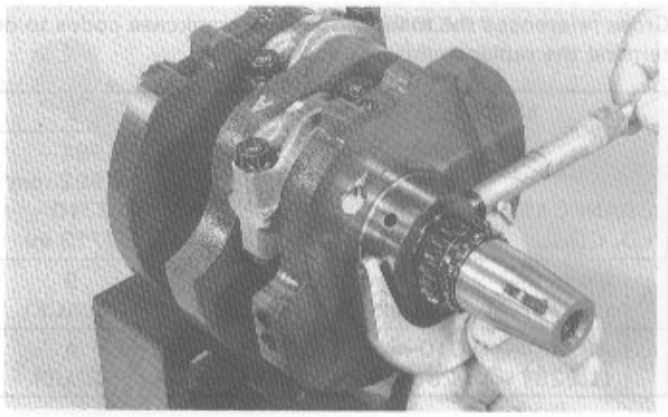

Measure the I.D. of the main journal bearing.
Calculate the clearance between the main journal and main bearing.

SERVICE LIMIT: 0.06 mm (0.002 in)

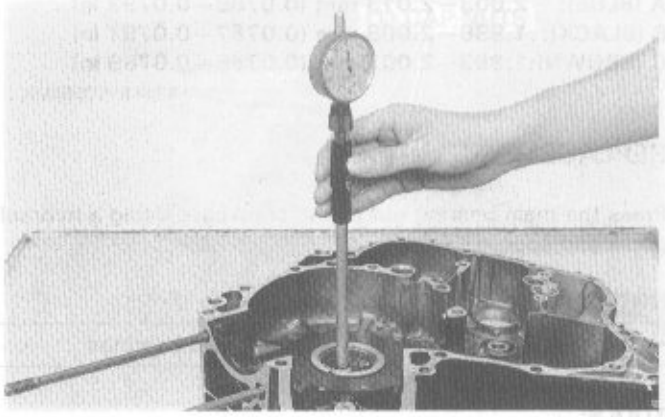

CRANKCASE SELECTION

Note the main journal O.D. code number or measure the main journal O.D.

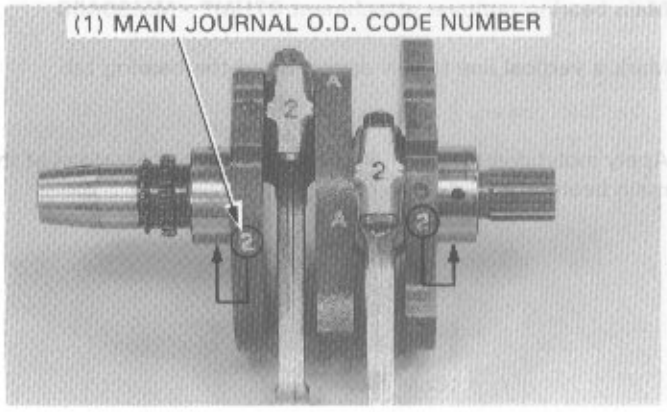

The crankcase main bearing I.D. code number (A or B) stamped on each crankcase identifies its inside diameter.

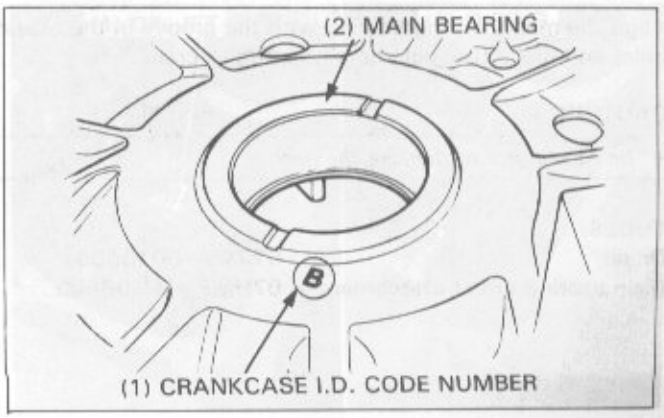

Cross references the main journal and crankcase codes to determine the replacement bearing.

CRANKCASE I.D. CODE / MAIN JOURNAL O.D. CODE		1	2
		44.992–45.000 mm (1.7713–1.7717 in)	44.984–44.992 mm (1.7710–1.7713 in)
A	48.990–49.000 mm (1.9287–1.9291 in)	C (BROWN)	B (BLACK)
B	49.000–49.010 mm (1.9291–1.9295 in)	B (BLACK)	A (BLUE)

BEARING INSERT THICKNESS
A (BLUE): 2.003–2.013 mm (0.0789–0.0793 in)
B (BLACK): 1.998–2.008 mm (0.0787–0.0791 in)
C (BROWN):1.993–2.003 mm (0.0785–0.0789 in)

REPLACEMENT

Press the main bearing out of the crankcase using a hydraulic press and special tools.

NOTE

- Always use a press to remove the main bearings.

TOOLS:
Driver 07749–0010000
Main bearing remover attachment 07HMF–MM90400

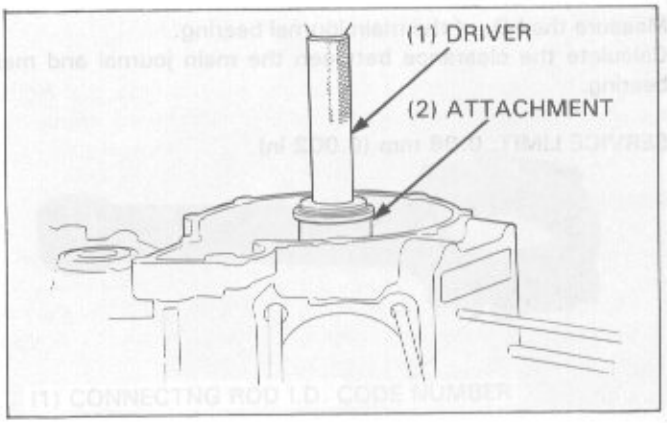

Mark a vertical line below each side of the bearing tab.

Apply molybdenum disulfide grease to the outer surface of the main bearing.

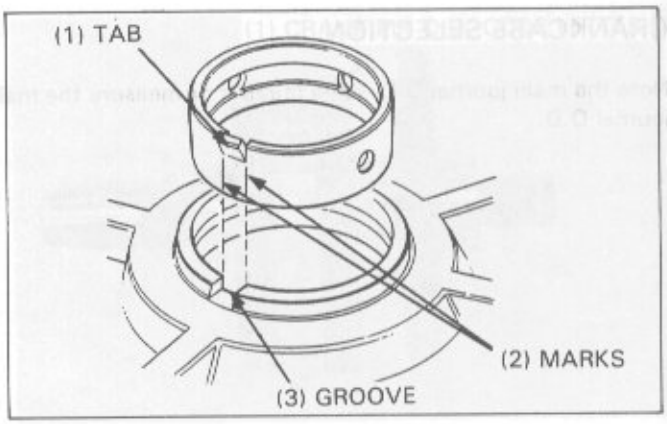

Align the marks on the bearing with the groove in the bearing hole, and press the main bearing into the crankcase.

CAUTION

- *Be careful not to damage the bearings.*

TOOLS:
Driver 07749–0010000
Main bearing driver attachment 07HMF–MM90400

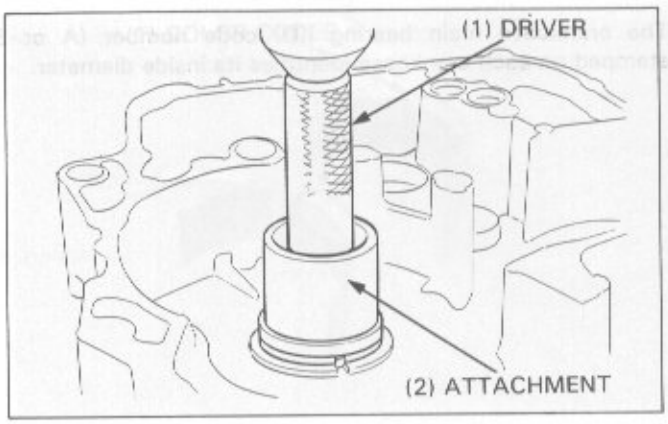

CONNECTING ROD/CRANKSHAFT INSTALLATION

Install the crankpin bearings on the connecting rods and bearing caps, aligning the tabs on the bearing with the grooves in the rods and caps.

Apply molybdenum disulfide grease to the crankpin bearings.

Install the connecting rods and bearing caps and tighten the bearing cap nuts.

TORQUE: 34 N·m (3.4 kg-m, 25 ft-lb)

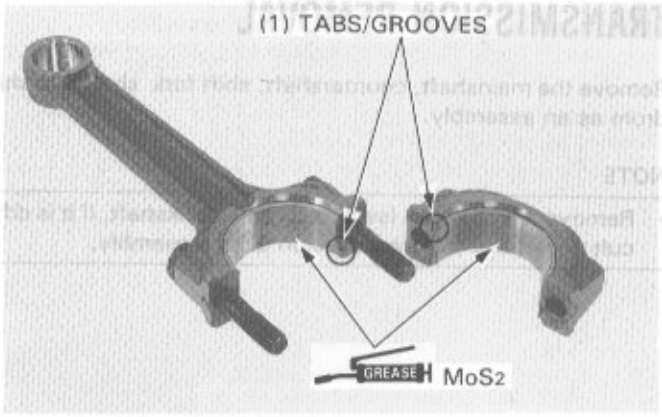

NOTE

- Tighten the bolts in a crisscross pattern in 2–3 steps.
- Make sure the connecting rods rotate smoothly after tightening the cap nuts.

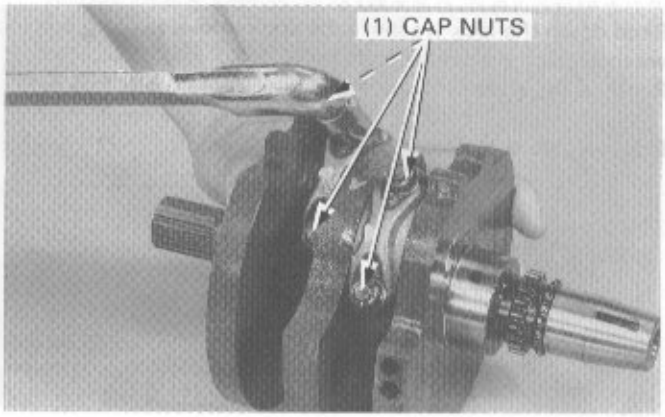

Apply molybdenum disulfide grease to the main journals.

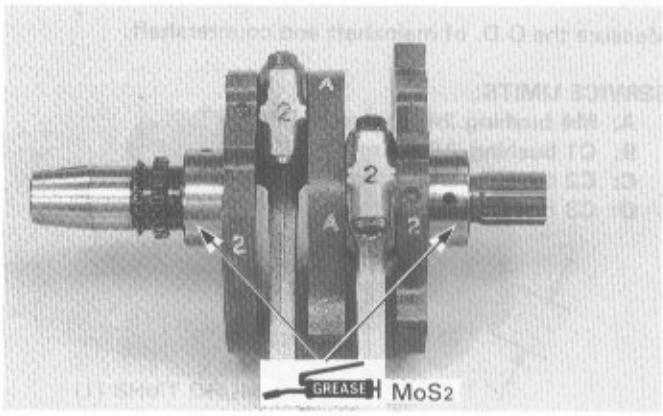

Remove the oil jets from the left and right crankcase.
Check the pieces for clogging.
Check the O-ring for damage.

Install them and install the crankshaft to the left crankcase.

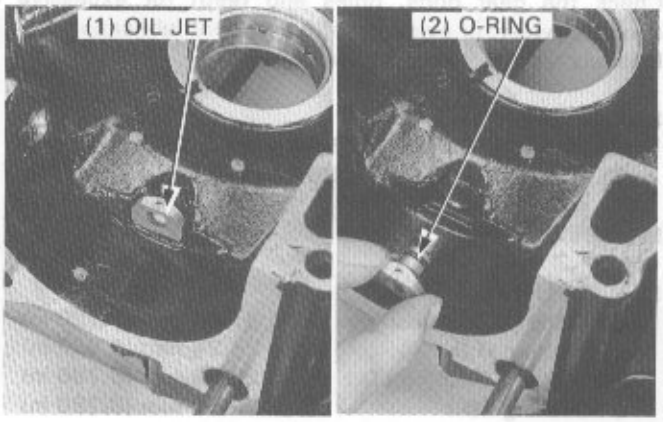

TRANSMISSION REMOVAL

Remove the mainshaft, countershaft, shift fork shaft and shift drum as an assembly.

NOTE

- Remove the oil pump (section 2) and crankshaft, if it is difficult to remove the transmission as an assembly.

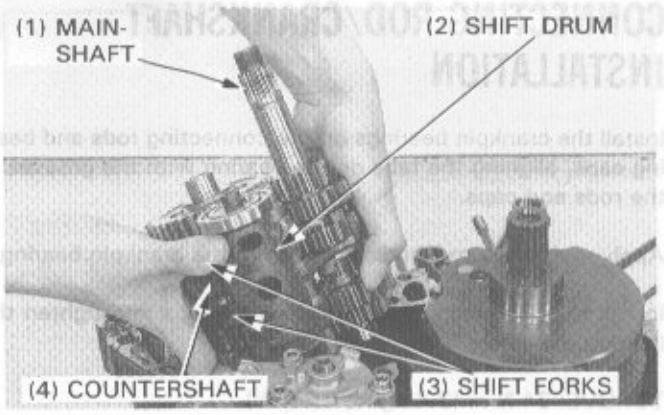

Bend down the lock washer tabs and remove the bolt and lock washer from the center shift fork.
Remove the shift fork shaft form the center shift fork.

Disassemble the mainshaft and countershaft.

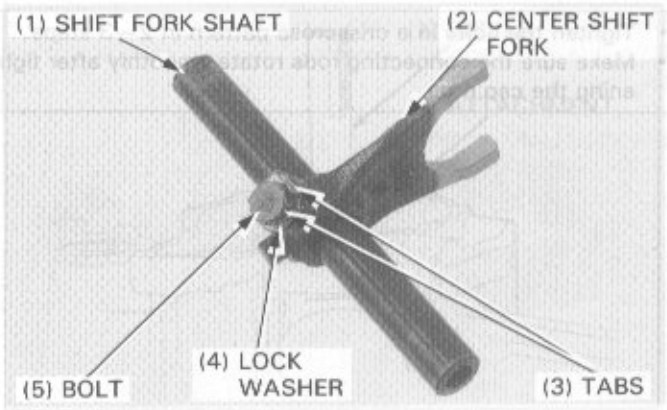

Measure the O.D. of mainshaft and countershaft.

SERVICE LIMITS:

A: M4 bushing 24.90 mm (0.980 in)
B: C1 bushing 19.92 mm (0.784 in)
C: C2 bushing 24.90 mm (0.980 in)
D: C3 bushing 24.90 mm (0.980 in)

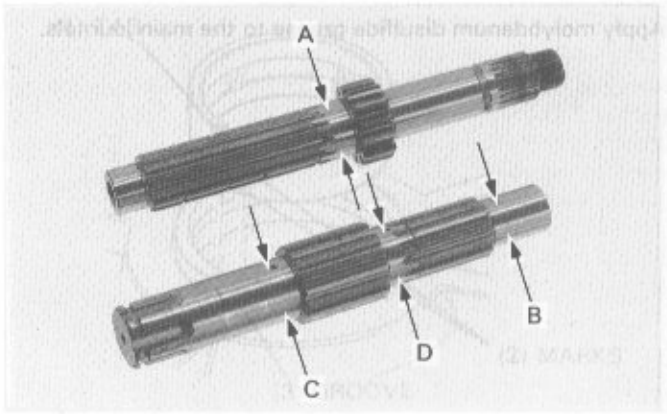

Check the gear dogs, holes and teeth for excessive or abnormal wear, or evidence of insufficient lubrication.
Measure the I.D. of each gear.

SERVICE LIMITS:

M4, M5, C2, C3 gears: 28.04 mm (1.104 in)
C1 gear: 24.04 mm (0.947 in)

Measure the I.D. and O.D. of each gear bushing.

SERVICE LIMITS:

M4, M5, C2, C3 bushings O.D.: 27.94 mm (1.100 in)
C1 bushing O.D.: 24.94 mm (0.982 in)
M4, C2, C3 bushing I.D.: 25.06 mm (0.790 in)
C1 bushing I.D.: 20.06 mm (0.790 in)

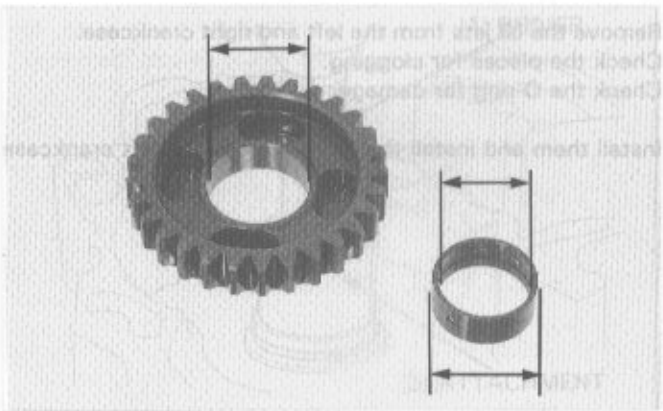

Calcurate the bushing to shaft clearances and gear to bushing clearance.

SERVICE LIMITS:
bushing-to-shaft (M4, C2, C3):
0.06 mm (0.002 in)
gear-to-bushing (M4, M5, C1, C2, C3):
0.10 mm (0.004 in)

Inspect the shift drum and shift fork shaft journals for exessive wear or damage.

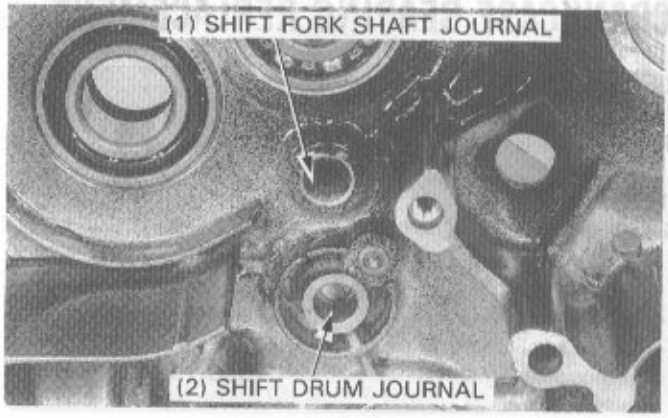

Inspect the shift drum end for scoring, scratches, or evidence of insufficient lubrication. Check the shift drum grooves for damage.
Measure the shift drum shaft O.D. at the left side journal.

SERVICE LIMIT: 13.90 mm (0.547 in)

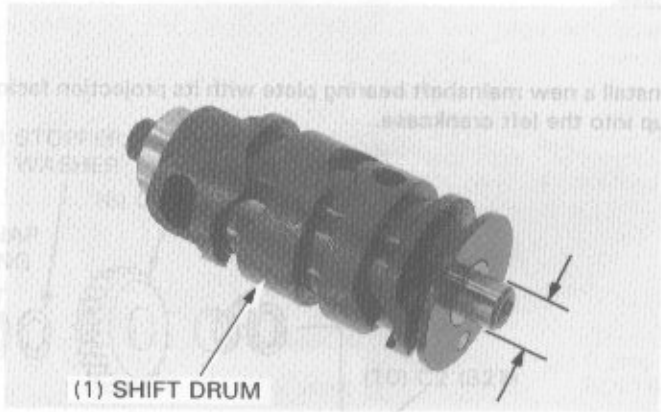

Check the shift fork shaft for scratches, scoring or evidence of insufficient lubrication.
Measure the shift fork shaft O.D.

SERVICE LIMIT: 12.90 mm (0.508 in)

Measure the right and left shift fork I.D.s and the shift fork claw thickness.

SERVICE LIMITS:
I.D.: 13.04 mm (0.513 in)
CLAW THICKNESS: 5.63 mm (0.222 in)

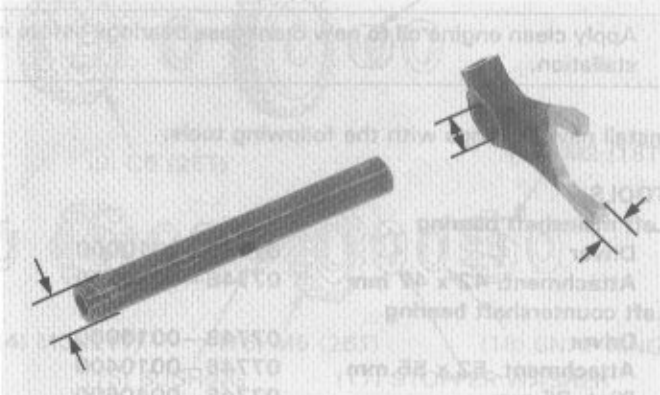

Turn the inner race of each bearing with your finger. The bearings should turn smoothly and quietly. Also check that the bearing outer race fits tightly in the crankcase.

Remove and discard the bearings if the races do not turn smoothly, quietly, or if they fit loosely in the crankcase (page 11-12).

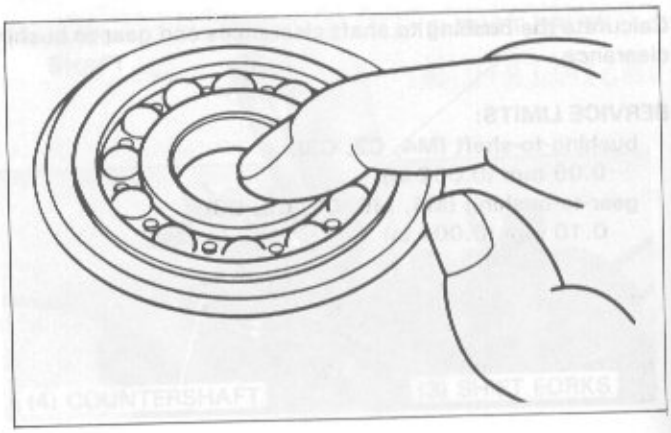

CRANKCASE BEARING REPLACEMENT

LEFT CRANKCASE

Remove the left mainshaft bearing using the special tools.

TOOLS:

Bearing remover set	**07936—3710001 not available in U.S.A.**
— remover handle	**07936—3710100**
— bearing remover set	**07936—3710600**
— remover sliding weight	**07741—0010201 or**
— remover weight	**07936—3710200**

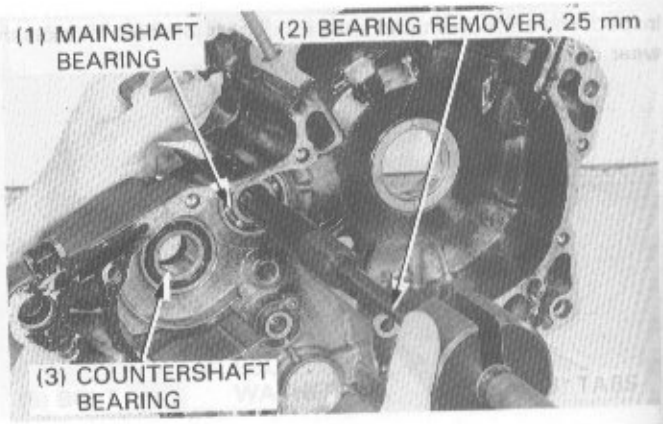

Drive the countershaft bearing and oil seal out of the crankcase.

Install a new mainshaft bearing plate with its projection facing up into the left crankcase.

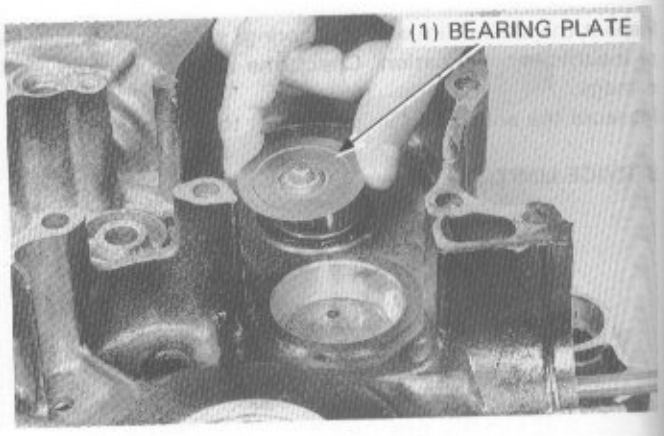

NOTE

- Apply clean engine oil to new crankcase bearings before installation.

Install new bearings with the following tools.

TOOLS:

Left mainshaft bearing	
Driver	**07749—0010000**
Attachment, 42 x 47 mm	**07746—0010300**
Left countershaft bearing	
Driver	**07749—0010000**
Attachment, 52 x 55 mm	**07746—0010400**
Pilot, 25 mm	**07746—0040600**

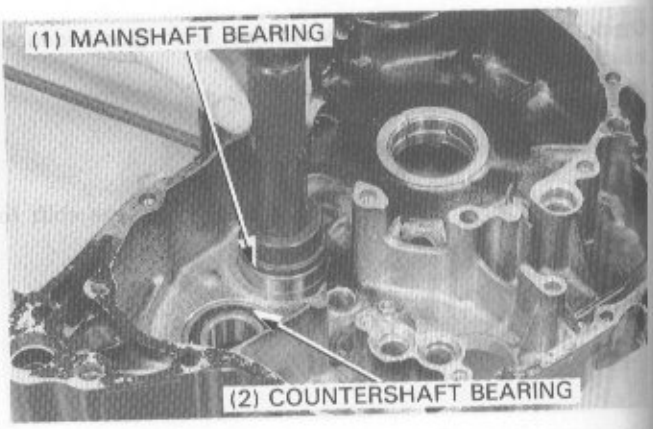

Install a new countershaft oil seal.
Check the gearshift spindle oil seal for wear or damage, replace if necessary.

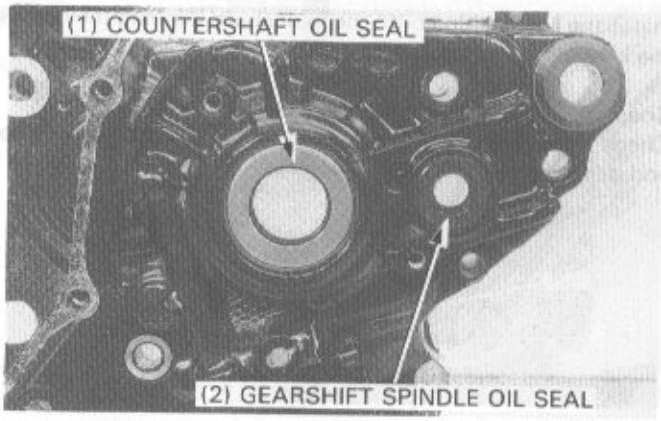

RIGHT CRANKCASE

Drive the countershaft bearing, mainshaft bearing and shift drum bearing out of the crankcase.

TOOLS:

Right mainshaft bearing	
Driver	**07749–0010000**
Attachment, 52 x 55 mm	**07746–0010400**
Pilot, 22 mm	**07746–0041000**
Right countershaft bearing	
Driver	**07749–0010000**
Attachment, 42 x 47 mm	**07746–0010300**
Pilot, 20 mm	**07746–0040500**

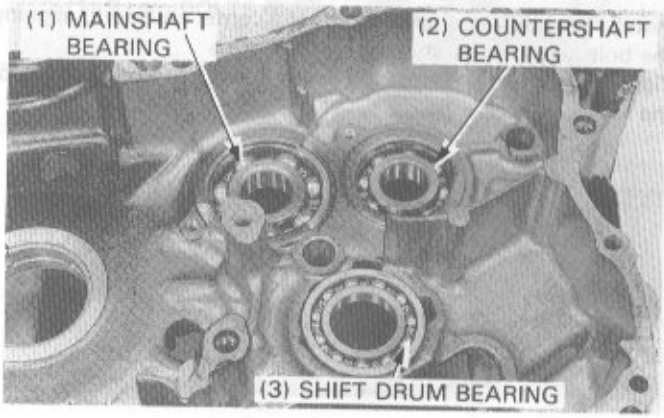

TRANSMISSION INSTALLATION

Assemble the mainshaft and countershaft.

Apply molybdenum disulfide grease to the following.
– shift fork grooves (M3, C4, C5 gear)
– inside and outside of the bushings
– outside of the spline bushings

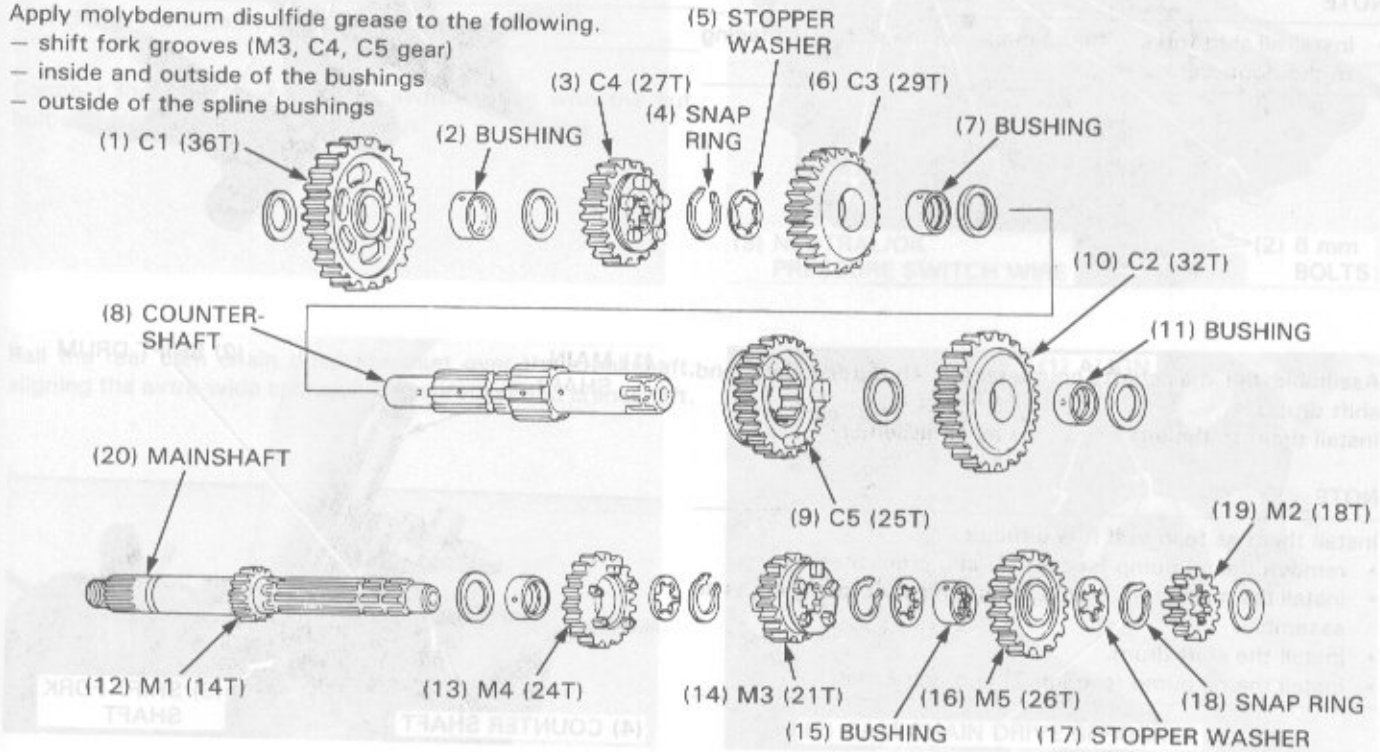

Install the M5 bushing onto the mainshaft, aligning the holes in the bushing and mainshaft.

Check the gears for free rotation on the shaft.
Check the snap rings are seated in the grooves and align their end gap with the land of the splines.

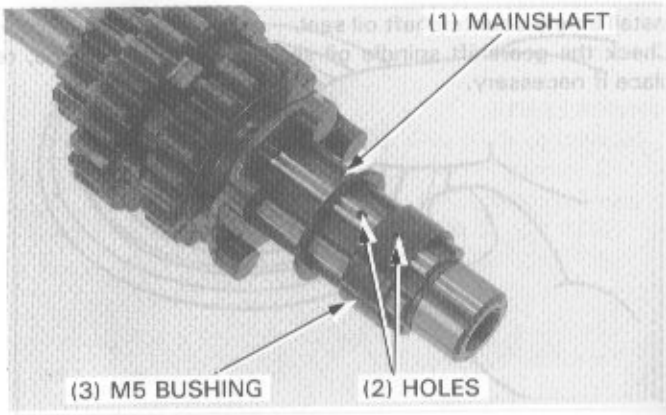

Install the shift fork shaft through the center shift fork, aligning the bolt holes in the shaft and shift fork.
Tighten the bolt with the lock washer and bend up the tabs of the lock washer.

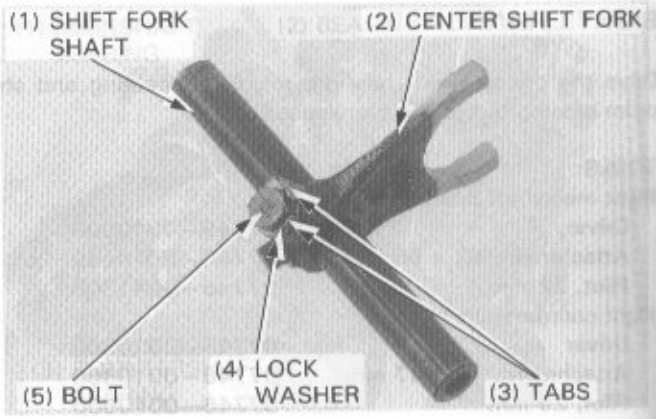

Install the right and left shift forks with the locations as shown.

NOTE

- Install all shift forks with the marks on the shift forks facing to the right crankcase.

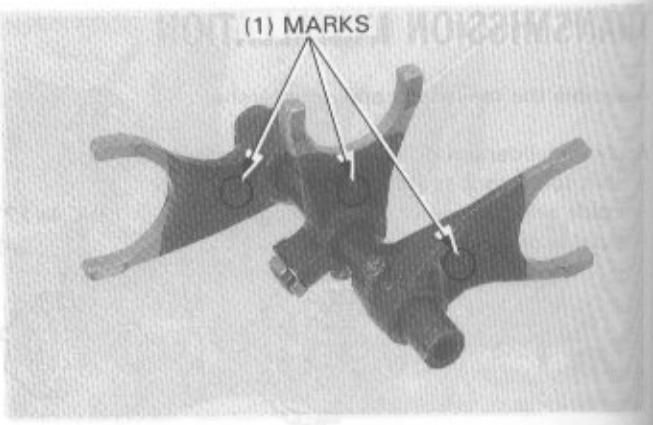

Assemble the mainshaft, countershaft, shift fork shaft and shift drum.
Install them to the left crankcase as an assembly.

NOTE

Install them as follow, if it is difficult:

- remove the oil pump (section 2) and crankshaft.
- install the mainshaft, countershaft and shift fork shaft as an assembly.
- install the shift drum.
- install the oil pump (section 2) and crankshaft.

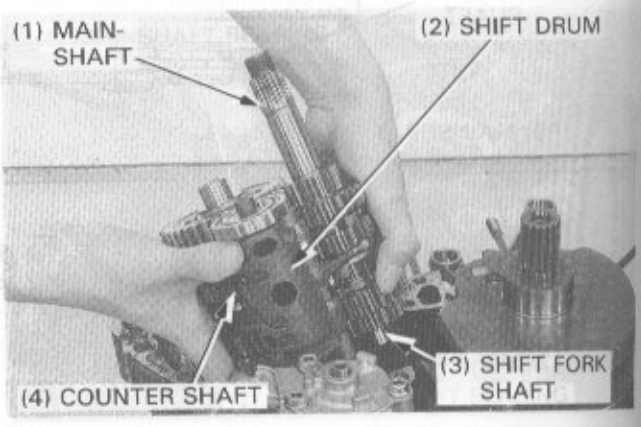

CRANKCASE ASSEMBLY

Apply sealant to the crankcase mating surfaces.
Install the dowel pins.

Assemble the right and left crankcase halves, being careful to align the dowel pins and shafts.

CAUTION

- *Do not force the crankcase halves together; if there is exessive force required, something is wrong.*
  Remove the right crankcase and check for misaligned parts.

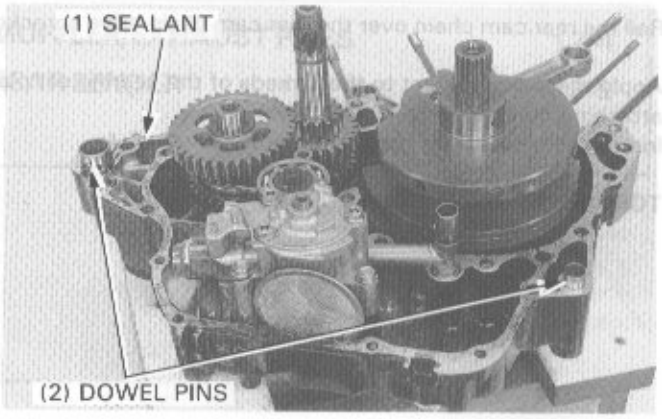

Apply oil to all crankcase bolts.
Install and tighten the right crankcase bolts in a crisscross pattern in 2—3 steps.

NOTE

- Tighten the 8 mm bolts first, then tighten the 6 mm bolts.

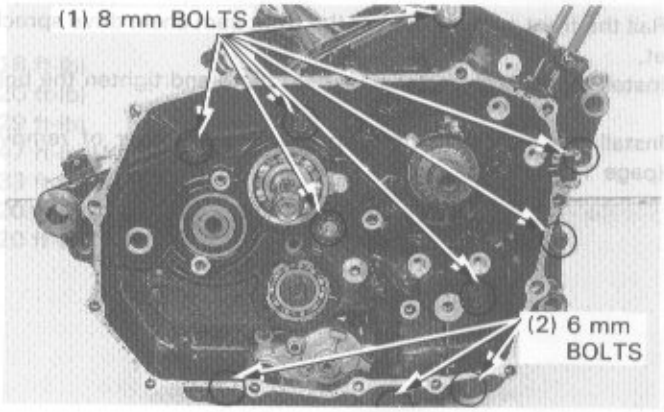

Install and tighten the left crankcase halves, bolts in a crisscross pattern in 2—3 steps.

NOTE

- Tighten the 8 mm bolts first, then the 6 mm bolts.

Connect the neutral/oil pressure switch wires with the nut, bolt and clamp, then tighten the nut.

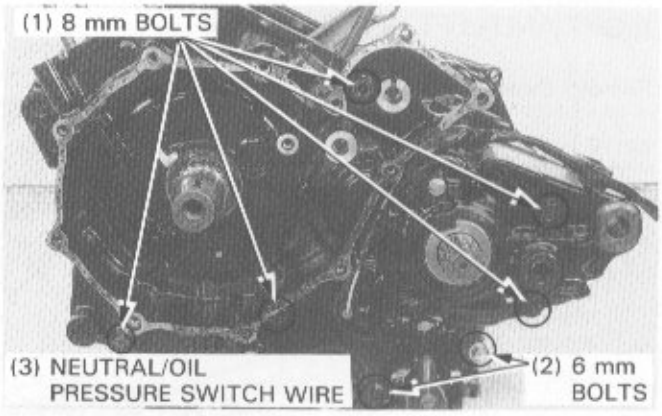

Rail the rear cam chain drive sprocket over the crankshaft, aligning the extra-wide splines in the sprocket and crankshaft.

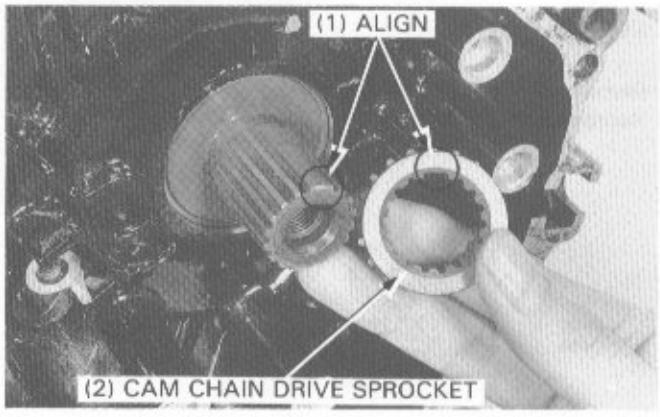

Rail the rear cam chain over the rear cam chain drive sprocket.

Apply the locking agent to the threads of the bearing set plate attaching bolt.
Install the bearing set plate and tighten the bolt.

TORQUE: 10 N·m (1.0 kg-m, 7 ft-lb)

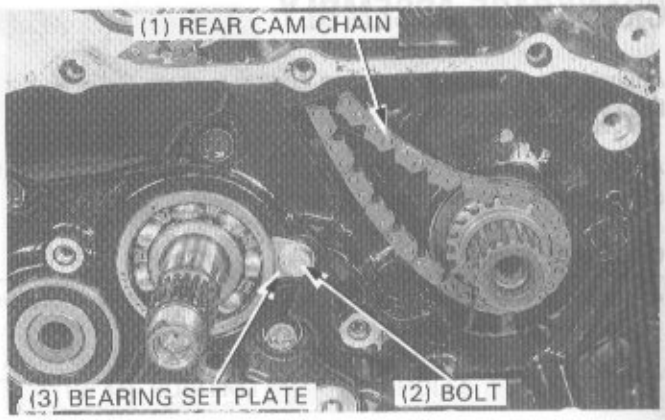

Rail the front cam chain over the front cam chain drive sprocket.
Install the cam chain tensioner set plate and tighten the bolt.

Install the remaining parts in the reverse order of removal (page 11-1).

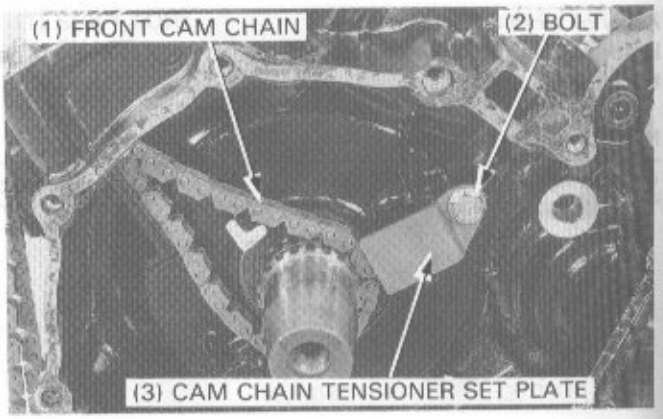

12. COWLING/MUFFLER/REAR FENDER

SERVICE INFORMATION	12-1	MUFFLER/EXHAUST PIPES	12-4
COWLING	12-2	REAR FENDER	12-5
SIDE COVER	12-4		

SERVICE INFORMATION

GENERAL

⚠ WARNING

- ***Do not service the exhaust system while it is hot.***

TORQUE VALUES

Exhaust pipe band bolt	22 N·m (2.2 kg-m, 16 ft-lb)
Exhaust pipe joint nut	27 N·m (2.7 kg-m, 20 ft-lb)
Muffler mounting bolt (front)	40 N·m (4.0 kg-m, 29 ft-lb)
(rear)	65 N·m (6.5 kg-m, 47 ft-lb) With carrier
Rear carrier bolt (front/left)	45 N·m (4.5 kg-m, 33 ft-lb)
(rear)	27 N·m (2.7 kg-m, 20 ft-lb)
Turn signal stay bolt	27 N·m (2.7 kg-m, 20 ft-lb)

COWLING

REMOVAL

RIGHT AND LEFT SIDE COWLING

Remove the three screws.
Disconnect the turn signal connector and release the tabs on the side cowling that hold the center cowling.
Remove the side cowling with releasing its upper tab from the upper cover groove.

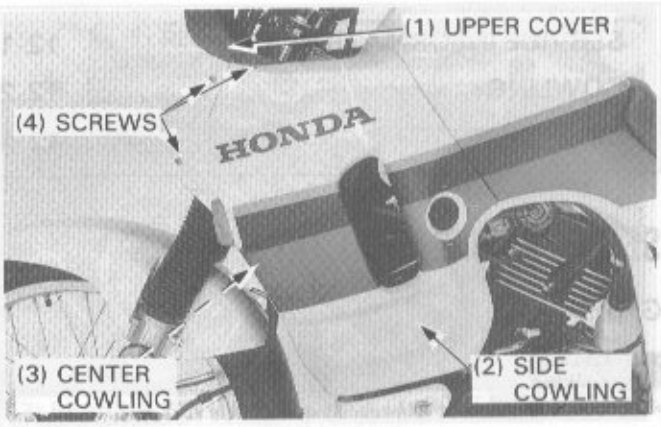

CENTER COWLING

Remove the two bolts and the center cowling.

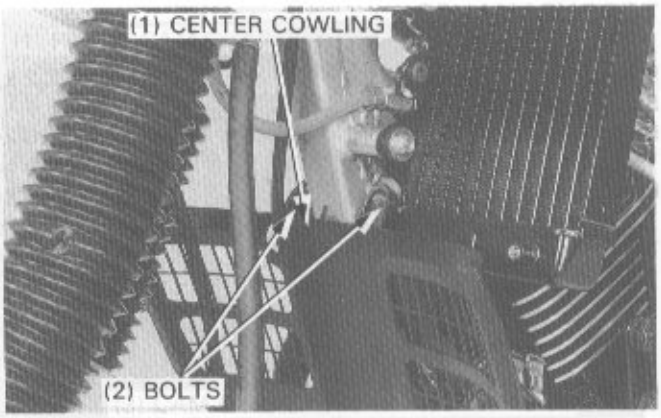

RIGHT AND LEFT UPPER COVER

Remove three screws and upper cover.

NOTE

- One of the screws also holds the side cowling.

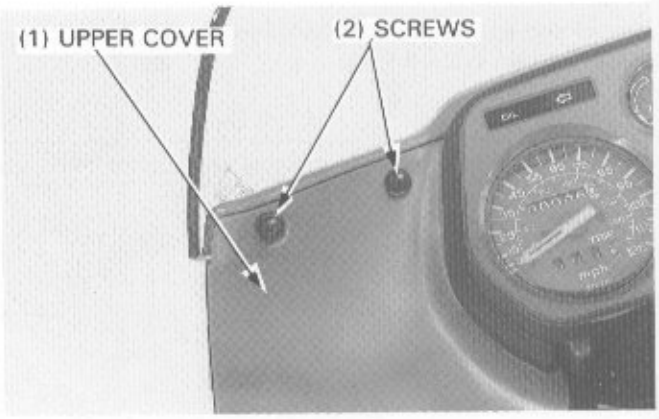

FRONT COWLING

Remove the side cowlings and upper covers.
Remove the four bolts and collars, and the front cowling.

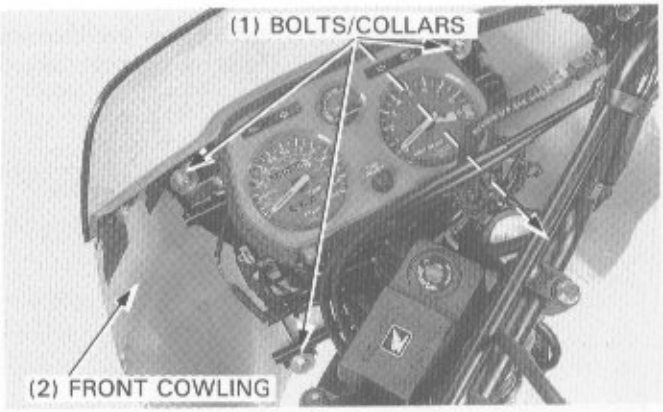

LOWER COWLING

Remove the three screws and the two bolts, and remove the lower cowling.

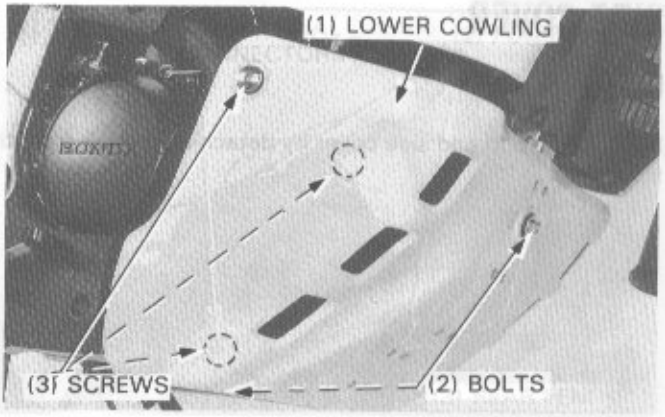

WINDSHIELD

Remove the four windshield mounting bolts and nuts, then the windshield from the front cowling.

NOTE

- Be careful not to damage the windshield.

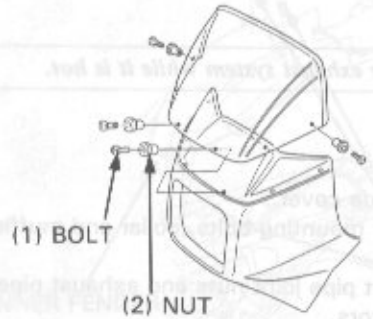

INSTALLATION

Installation is the reverse order of removal.

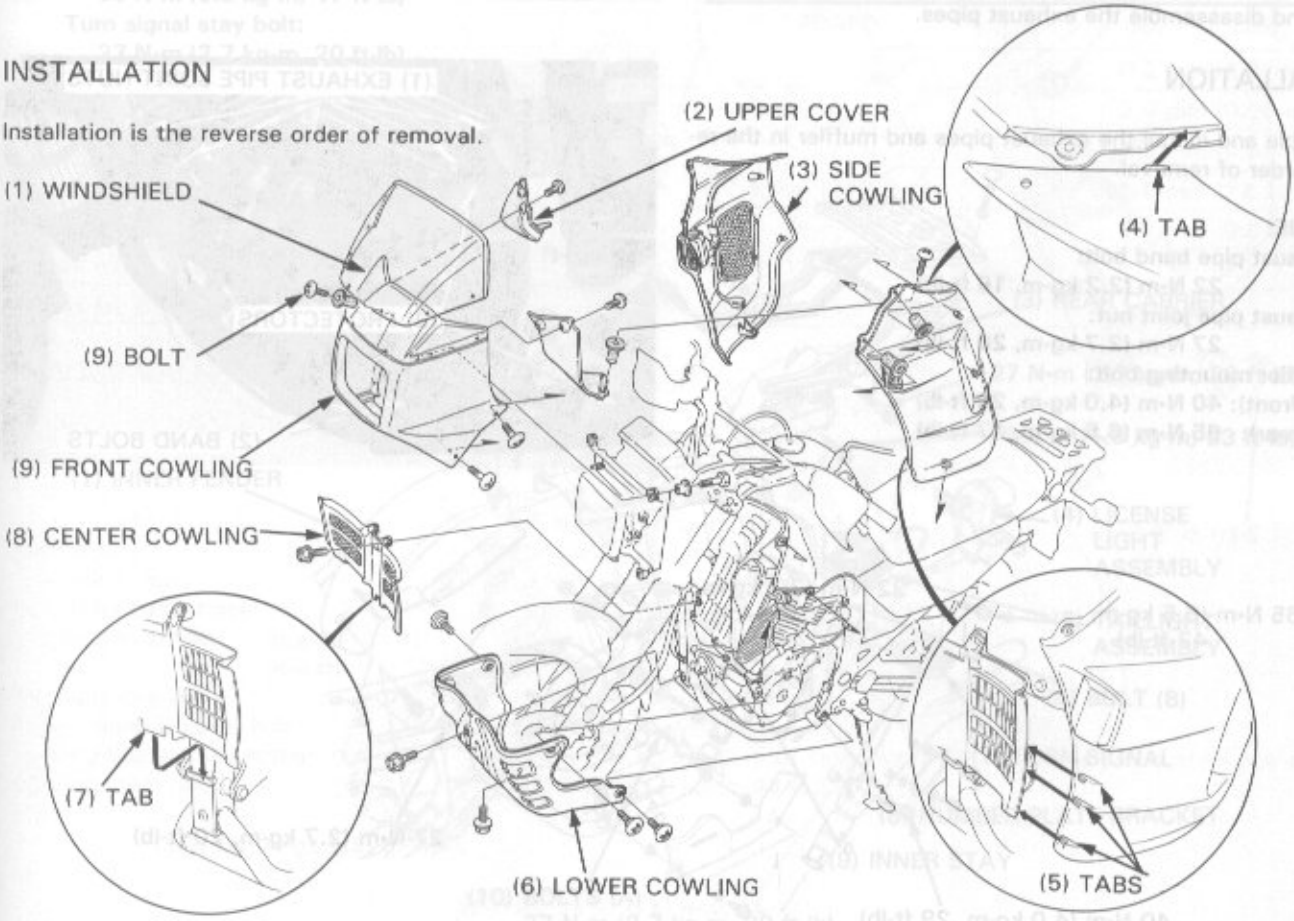

SIDE COVER

REMOVAL

Remove the bolt and side cover by detaching the tab from the frame hole.

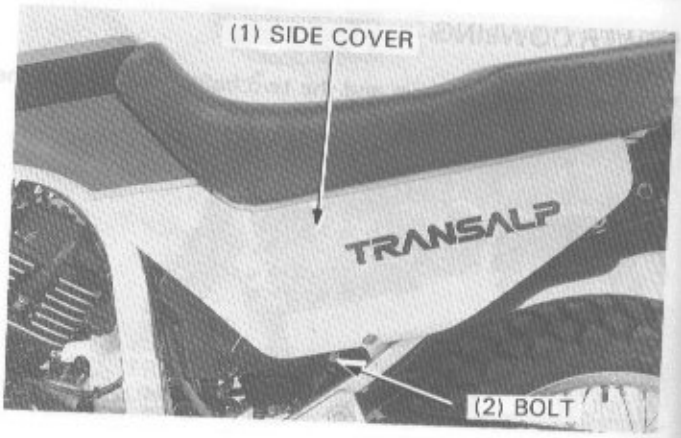

MUFFLER/EXHAUST PIPES

⚠ WARNING

- ***Do not service the exhaust system while it is hot.***

REMOVAL

Remove the right side cover.
Remove the muffler mounting bolts, collar and muffler.

Remove the exhaust pipe joint nuts and exhaust pipes.
Remove the protectors.
Remove the exhaust pipe band by removing the two band bolts and disassemble the exhaust pipes.

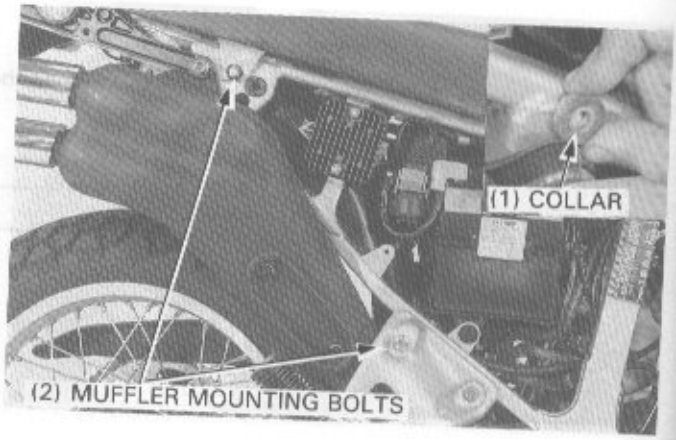

INSTALLATION

Assemble and install the exhaust pipes and muffler in the reverse order of removal.

TORQUE:

Exhaust pipe band bolt:
22 N·m (2.2 kg-m, 16 ft-lb)
Exhaust pipe joint nut:
27 N·m (2.7 kg-m, 20 ft-lb)
Muffler mounting bolt:
(front): 40 N·m (4.0 kg-m, 29 ft-lb)
(rear): 65 N·m (6.5 kg-m, 47 ft-lb)

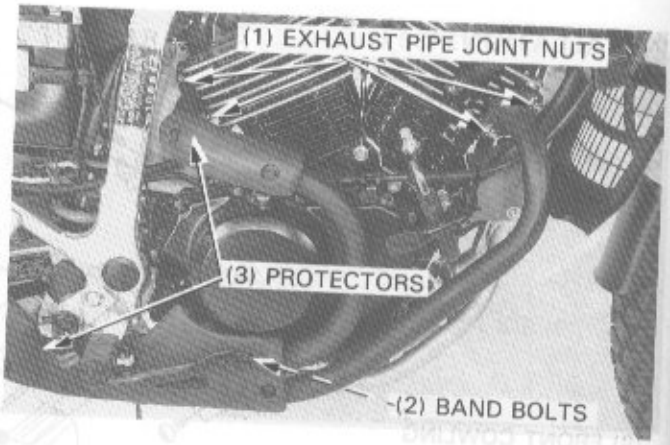

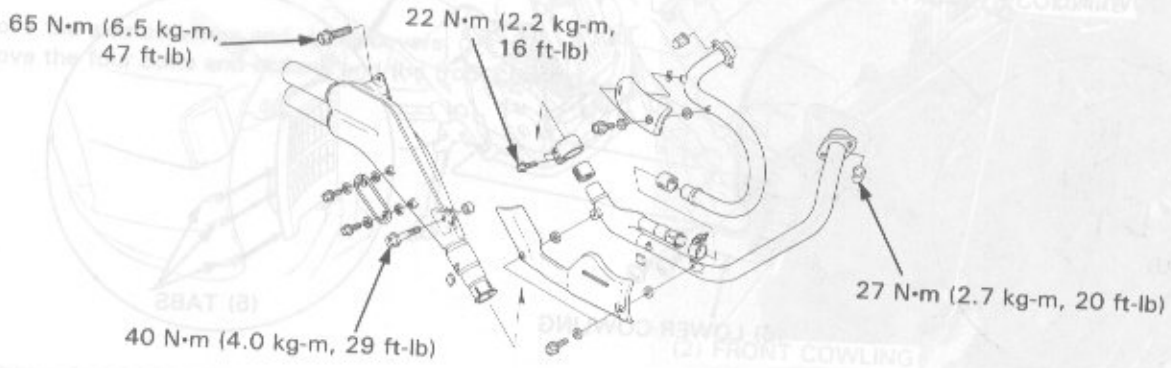

REAR FENDER

REMOVAL/INSTALLATION

Remove the side covers (page 12-4) and seat (page 4-3.)
Disconnect the taillight/turn signal connectors.
Remove the four bolts and rear fender as an assembly.

Remove the two bolts (A), and disassemble the rear carrier, turn signal stay and rear fender.

Remove the bolt (B), and disassemble the inner stay and number plate bracket.

Remove the two nuts and washers, and disassemble the number plate bracket and taillight assembly.

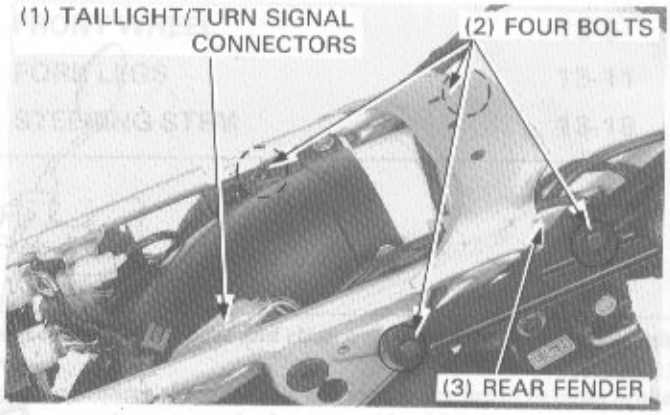

Remove the two bolts and the license plate assembly.
Remove the three bolts and inner fender.
Install the rear fender in the reverse order of removal.

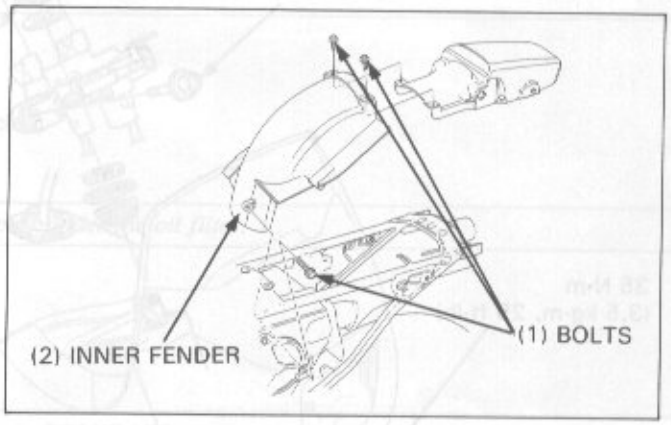

TORQUE:

Rear carrier
rear two bolts:
27 N·m (2.7 kg-m, 20 ft-lb)
front left bolt:
45 N·m (4.5 kg-m, 33 ft-lb)
front right bolt (muffler rear stay bolt):
65 N·m (6.5 kg-m, 47 ft-lb)
Turn signal stay bolt:
27 N·m (2.7 kg-m, 20 ft-lb)

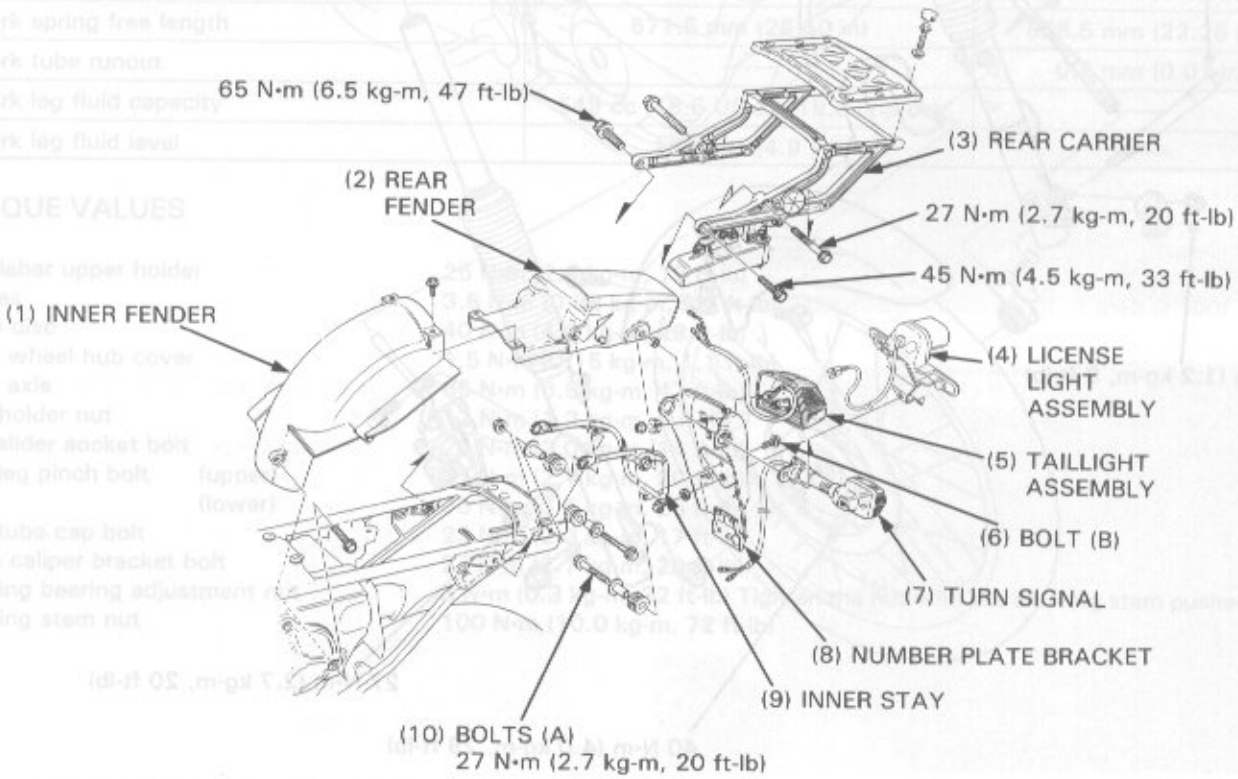

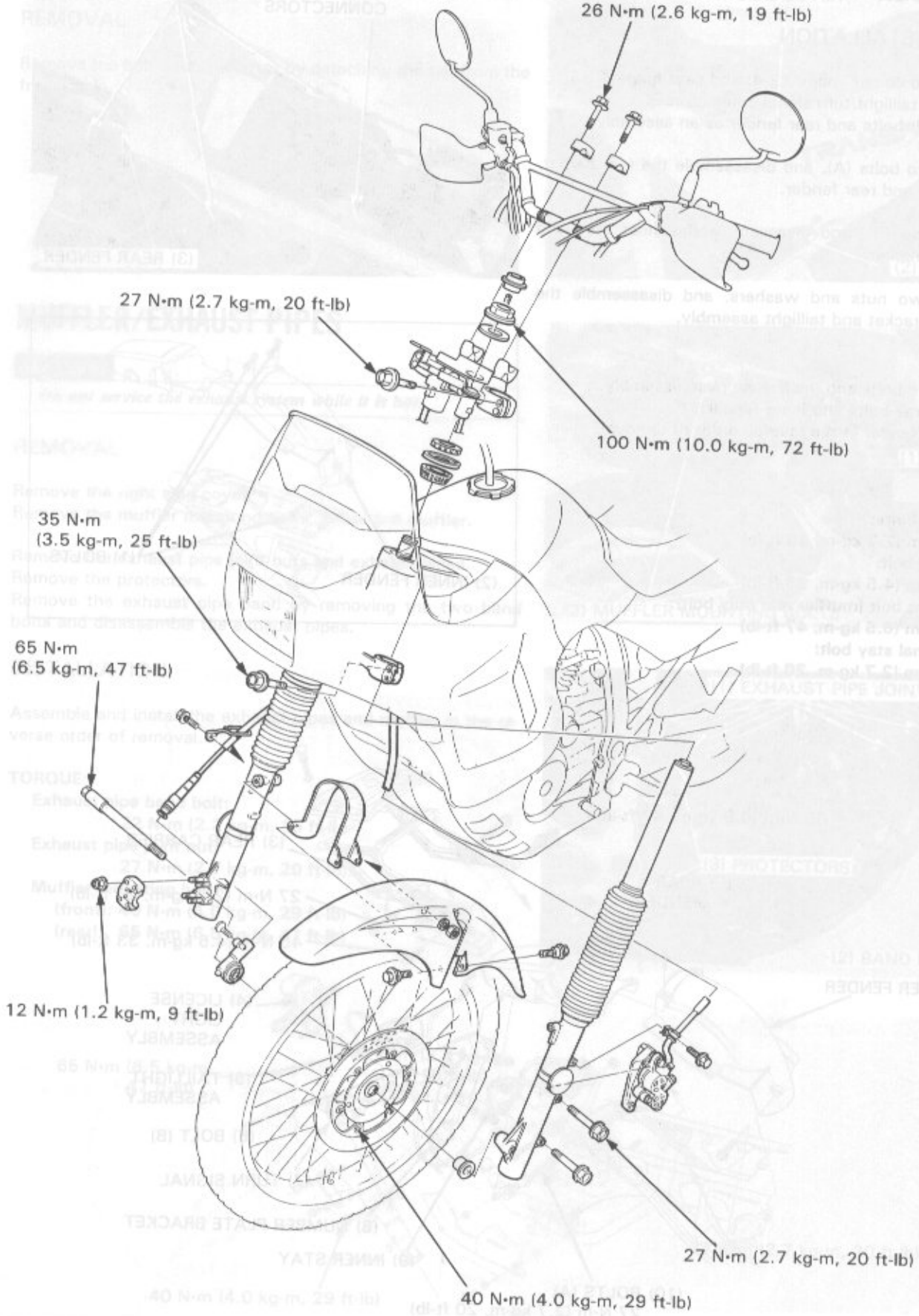
26 N·m (2.6 kg-m, 19 ft-lb)
27 N·m (2.7 kg-m, 20 ft-lb)
100 N·m (10.0 kg-m, 72 ft-lb)
35 N·m
(3.5 kg-m, 25 ft-lb)
65 N·m
(6.5 kg-m, 47 ft-lb)
12 N·m (1.2 kg-m, 9 ft-lb)
27 N·m (2.7 kg-m, 20 ft-lb)
40 N·m (4.0 kg-m, 29 ft-lb)

13. FRONT WHEEL/SUSPENSION/STEERING

SERVICE INFORMATION	13-1	FRONT WHEEL	13-5
TROUBLESHOOTING	13-2	FORK LEGS	13-11
HANDLEBARS	13-3	STEERING STEM	13-18

SERVICE INFORMATION

⚠ WARNING

- ***A contaminated brake disc or pad reduces stopping power. Discard contaminated pads and clean a contaminated disc with a high quality brake degreasing agent.***
- ***Inhaled asbestos fibers have been found to cause respiratory disease and cancer. Never use an air hose or dry brush to clean brake assemblies. In the United States, use OSHA-approved vacuum cleaner or alternate method approved by OSHA designed to minimize the hazard by air borne asbestos fibers.***

GENERAL

- A jack or other support is required to support the motorcycle.

CAUTION

- *Do not support the motorcycle by putting a jack or other support under the oil filter.*

- Never ride on the wheel rim.

SPECIFICATIONS

ITEM		STANDARD	SERVICE LIMIT
Axle shaft runout		—	0.2 mm (0.01 in)
Front wheel rim runout	Radial	—	2.0 mm (0.08 in)
	Axial	—	2.0 mm (0.08 in)
Fork spring free length		571.5 mm (22.50 in)	565.5 mm (22.26 in)
Fork tube runout		—	0.2 mm (0.01 in)
Fork leg fluid capacity		549 cc (18.6 US oz, 19.3 Imp oz)	—
Fork leg fluid level		125 mm (4.9 in)	—

TORQUE VALUES

Handlebar upper holder		26 N·m (2.6 kg-m, 19 ft-lb)
Spokes		3.8 N·m (0.38 kg-m, 2.7 ft-lb)
Brake disc		40 N·m (4.0 kg-m, 29 ft-lb)
Front wheel hub cover		1.5 N·m (0.15 kg-m, 1.1 ft-lb)
Front axle		65 N·m (6.5 kg-m, 47 ft-lb)
Axle holder nut		12 N·m (1.2 kg-m, 9 ft-lb)
Fork slider socket bolt		20 N·m (2.0 kg-m, 14 ft-lb)
Fork leg pinch bolt	(upper)	27 N·m (2.7 kg-m, 20 ft-lb)
	(lower)	35 N·m (3.5 kg-m, 25 ft-lb)
Fork tube cap bolt		23 N·m (2.3 kg-m, 17 ft-lb)
Brake caliper bracket bolt		27 N·m (2.7 kg-m, 20 ft-lb)
Steering bearing adjustment nut		3 N·m (0.3 kg-m, 22 ft-lb) Tighten the nut with the steering stem pushed up.
Steering stem nut		100 N·m (10.0 kg-m, 72 ft-lb)

TOOLS

Special

Fork seal driver	07947—KA50100
Fork seal driver attachment	07947—KF00100
Steering stem socket	07916—3710100
Ball race remover	07953—MA00000 or 07736—A01000A
Steering stem driver	07946—4300100 or 07946—MB00000 with GN HT 54

Common

Bearing remover shaft	07746—0050100
Bearing remover head, 15 mm	07746—0050400 or equivalent commericially available in U.S.A.
Driver	07749—0010000
Attachment, 32 x 35 mm	07746—0010100
Attachment, 42 x 47 mm	07746—0010300
Pilot, 15 mm	07746—0040300
Extension bar	07716—0020500
Lock nut wrench, 30 x 32 mm	07716—0020400 or equivalent commercially available in U.S.A.

TROUBLESHOOTING

Hard Steering
- Steering bearing adjustment nut too tight
- Faulty steering stem bearing(s)
- Insufficient air in front tire

Steers to One Side or Does Not Track Straight
- Bent fork leg(s)
- Bent front axle, wheel installed incorrectly
- Unequal oil quantity in fork tubes

Front Wheel Wobbling
- Distorted rim
- Worn front wheel bearings
- Loose or broken spokes
- Faulty tire
- Axle or axle holder not tightened properly

Soft Suspension
- Weak fork springs
- Insufficient fluid in fork legs

Hard Suspension
- Fork oil level too high
- Fork tube(s) bent or fork slider(s) damaged

Front Suspension Noise
- Slider binding
- Insufficient fluid in fork legs
- Loose fork leg fasteners

HANDLEBARS

REMOVAL

Remove the following components:
- Wire bands.
- Left rear veiw mirror.
- Left handlebars switch.
- Master cylinder.
- Right handlebars switch.
- Throttle housing.

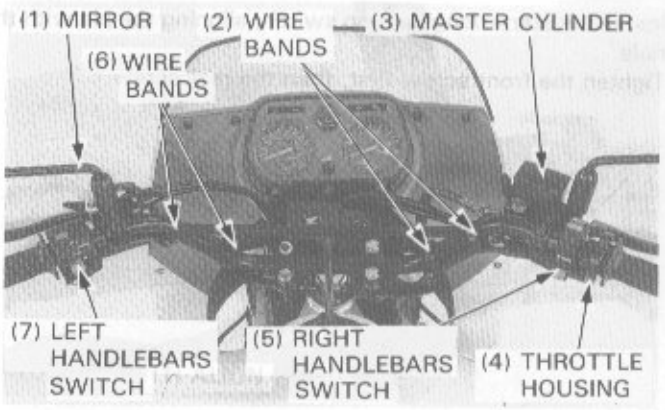

- Handlebars holder and handlebars.

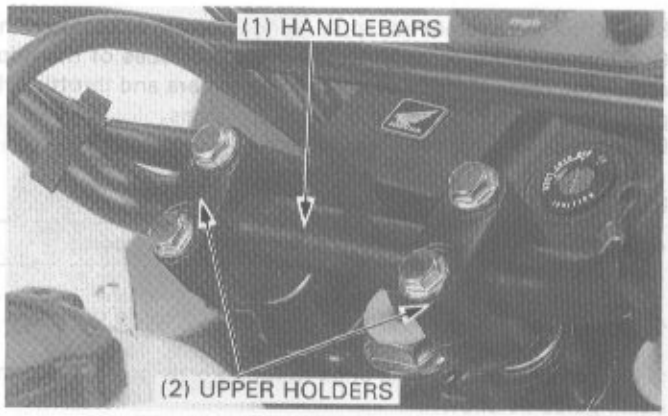

INSTALLATION

Place the handlebars on the lower holders, aligning the punch marks on the handlebars with the upper surface of the lower holder.

Install the upper holders with the punch marks facing forward.

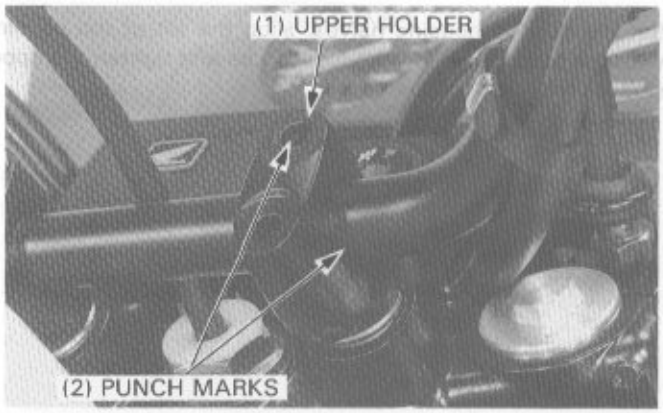

Tighten the front bolts first, then the rear bolts.

TORQUE: 26 N·m (2.6 kg-m, 19 ft-lb)

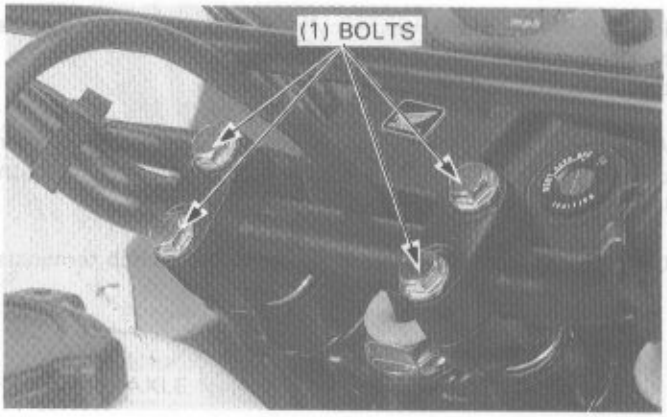

Install the starter/engine stop switch, aligning the pin with the hole.
Tighten the front screw first, then the rear screw.

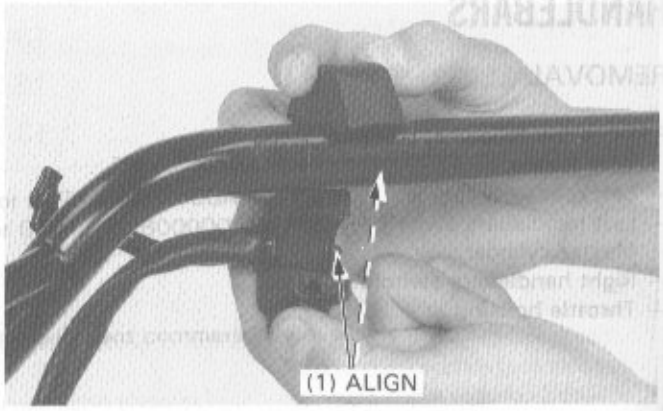

If the grips were removed, apply Honda Bond A or Honda Hand Grip Cement (U.S.A. only) to the inside surfaces of the grips and to the clean surface of the left handlebars and throttle grip pipe. Wait 3—5 minutes and install the grips.
Rotate the grips for even application of the adhesive.

NOTE

- Allow the adhesive to dry for an hour before using.

Apply grease to the throttle cable ends and cable guide.

Connect the throttle cable ends to the throttle grip and set the cable guide as shown.

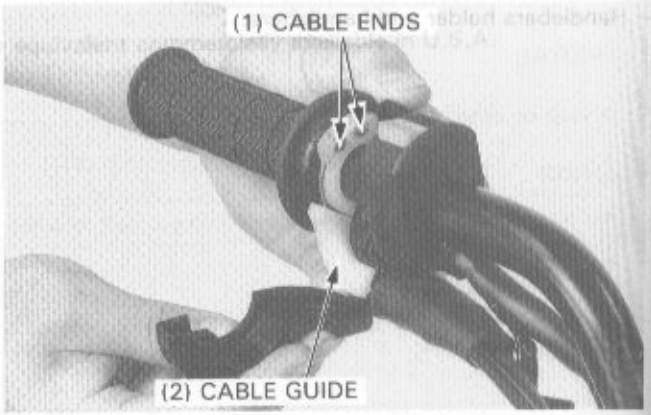

Set the throttle housing halves, align the slit of the housing with the punch mark on the handlebars and tighten the upper screw first, then the lower one.

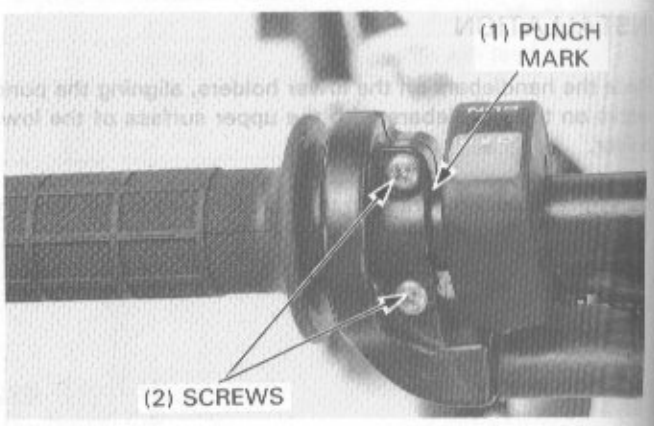

Install the front brake master cylinder and the master cylinder holder with the "UP" mark facing up.
Loosely install the holder bolts.

Align the slit of the master cylinder holder with the punch mark on the handlebars and tighten the upper bolt first, then the lower bolt.

Connect the front stop switch wires to the switch terminals.

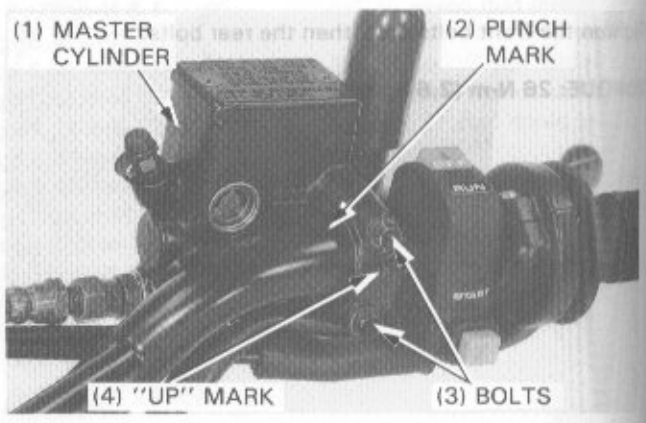

Install the left handlebars switch, aligning the pin with the hole in the handlebars, and tighten the front screw first, then the rear screw.

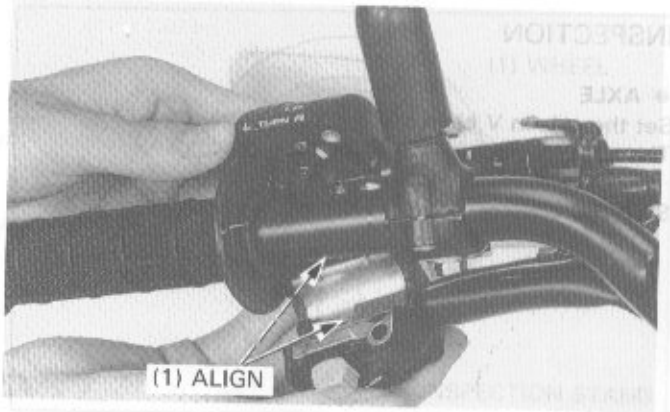

Align the slit of the clutch lever holder with the punch mark on the handlebars and tighten the front screw first, then the rear screw.

Connect the clutch switch wires to the switch terminals.

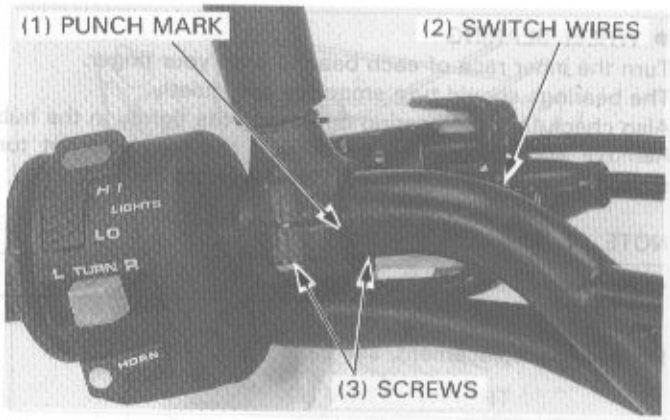

Route the switch wires and secure them with the wire bands (page 1-9).

Adjust the following:

- throttle grip free play (page 3-4).
- clutch lever free play (page 3-15).

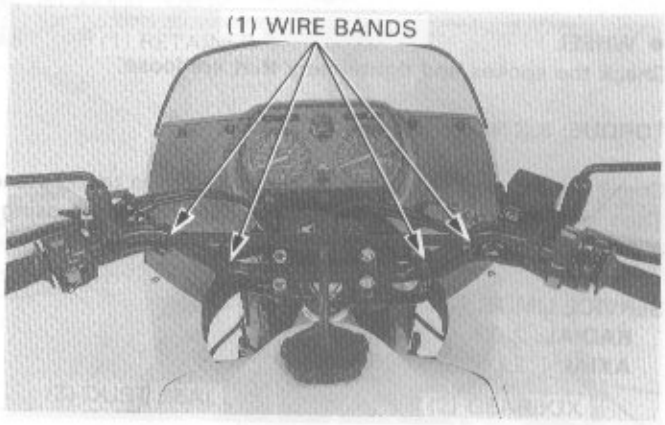

FRONT WHEEL

REMOVAL

Raise the front wheel off the ground by placing a box or work stand under the engine.

CAUTION

- *Do not support the motorcycle by placing a jack or other support under the oil filter.*

Disconnect the speedometer cable from the speedometer gearbox at the front wheel.

Loosen the axle holder nuts and then remove the front axle. Remove the front wheel.

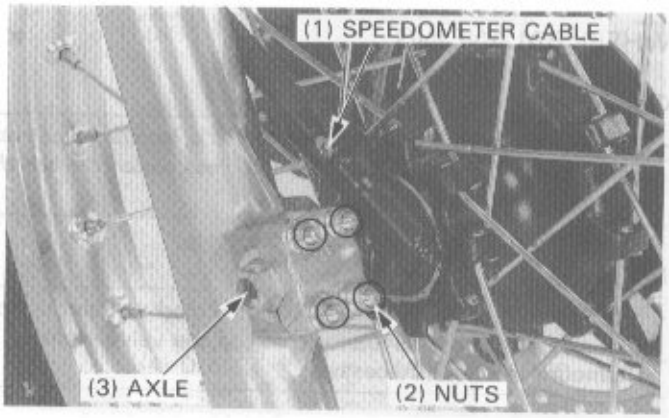

INSPECTION

• AXLE

Set the axle in V blocks and measure the runout.
The actual runout is 1/2 of the total reading.

SERVICE LIMIT: 0.2 mm (0.01 in)

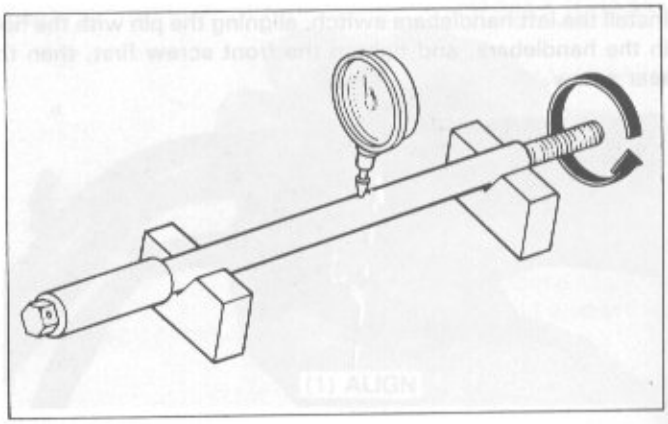

• WHEEL BEARING

Turn the inner race of each bearing with your finger.
The bearings should turn smoothly and quietly.
Also check that the bearing outer race fits tightly in the hub.
Remove and discard the bearings if the races do not turn smoothly, quietly, or if they fit loosely in the hub.

NOTE

- Replace wheel bearings in pairs.

For bearing replacement, see page 13-8.

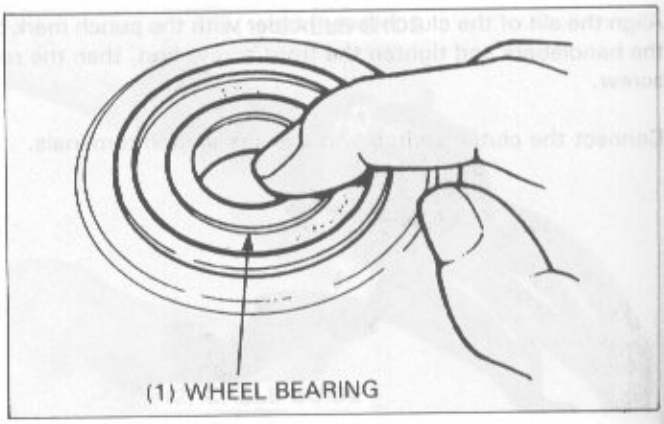

• WHEEL

Check the spokes and tighten any that are loose.

TORQUE: 3.8 N·m (0.38 kg-m, 2.7 ft-lb)

Check the rim runout by placing the wheel on a truing stand. Then spin the wheel with hand, and read the runout using a dial indicator.

SERVICE LIMITS:
RADIAL: 2.0 mm (0.08 in)
AXIAL: 2.0 mm (0.08 in)

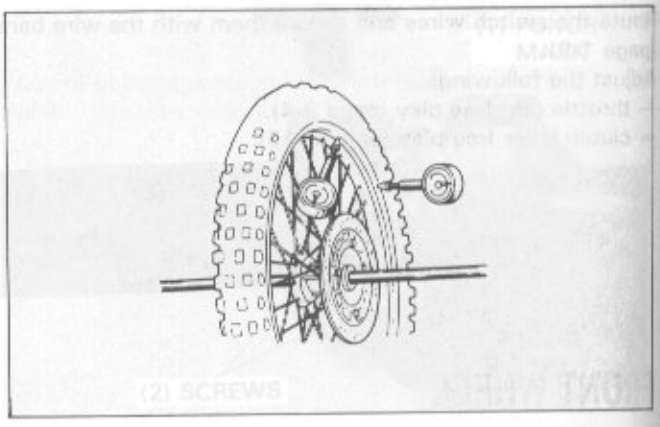

WHEEL BALANCING

CAUTION

- *Wheel balance directly affects the stability, handling and overall safety of the motorcycle. Always check balance when the tire has been removed from the rim.*

NOTE

- For optimum balance, the tire balance mark (a paint dot on the sidewall) must be located next to the valve stem. Remount the tire if necessary.

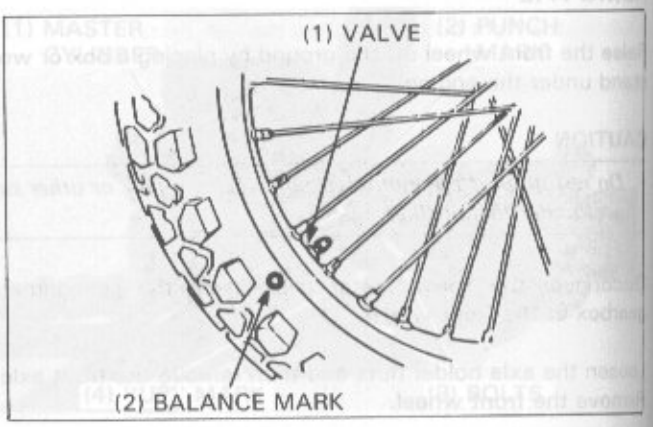

Mount the front wheel in a inspection stand.
Spin the wheel, allow it to stop, and mark the lowest (heaviest) part of the wheel with chalk. Do this two or three times to verify the heaviest area.
If the wheel is balanced, it will not stop consistently in the same position.

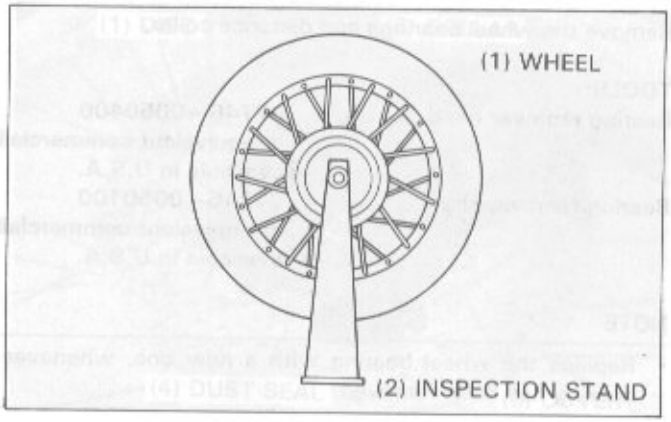

To balance the wheel, install wheel weights on the highest side of the rim, the side opposite to the chalk marks. Add just enough weight so the wheel will no longer stop in the same position when it is spun.
Do not add more than 60 grams.

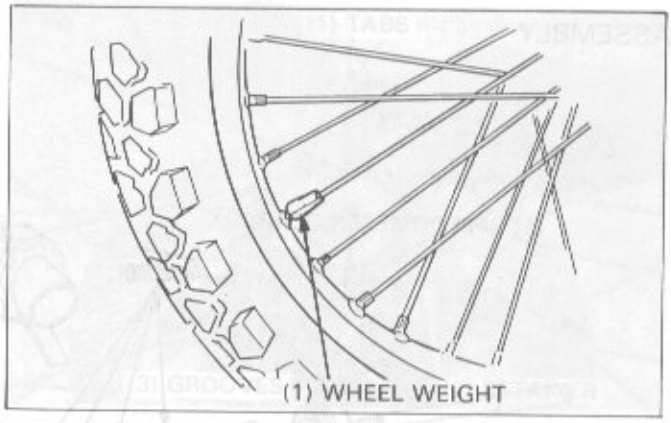

DISASSEMBLY

Remove the speedometer gearbox from the right side of wheel hub.

Remove the dust seal and speedometer gear retainer.

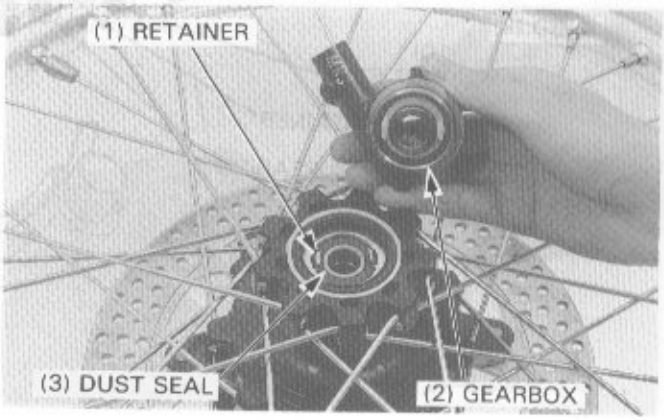

Remove the side collar, front brake disc, dust seal and the hub cover.

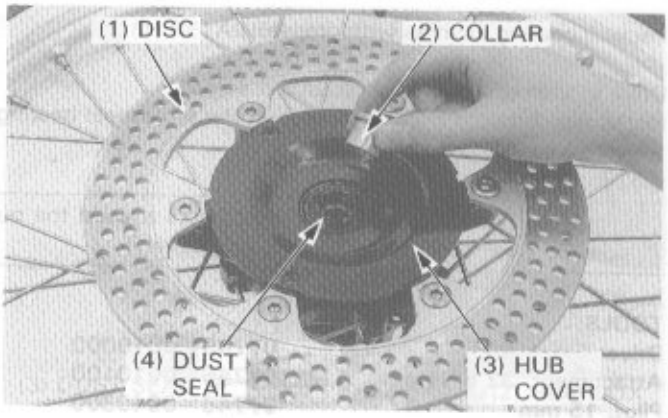

Remove the wheel bearings and distance collar.

TOOLS:

Bearing remover head	**07746–0050400 or equivalent commercially available in U.S.A.**
Bearing remover shaft	**07746–0050100 or equivalent commercially available in U.S.A.**

NOTE

- Replace the wheel bearing with a new one, whenever a bearing has been removed.

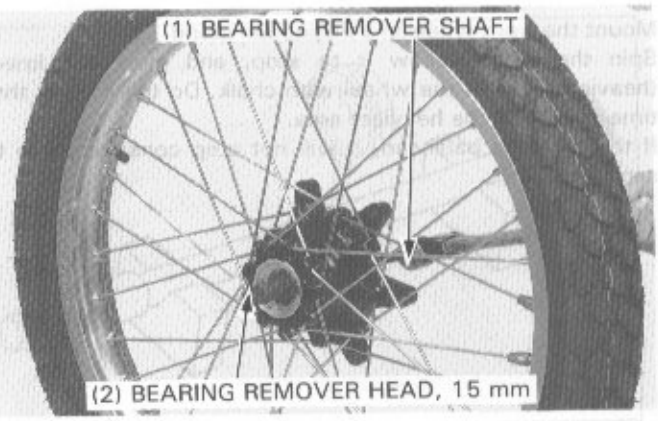

ASSEMBLY

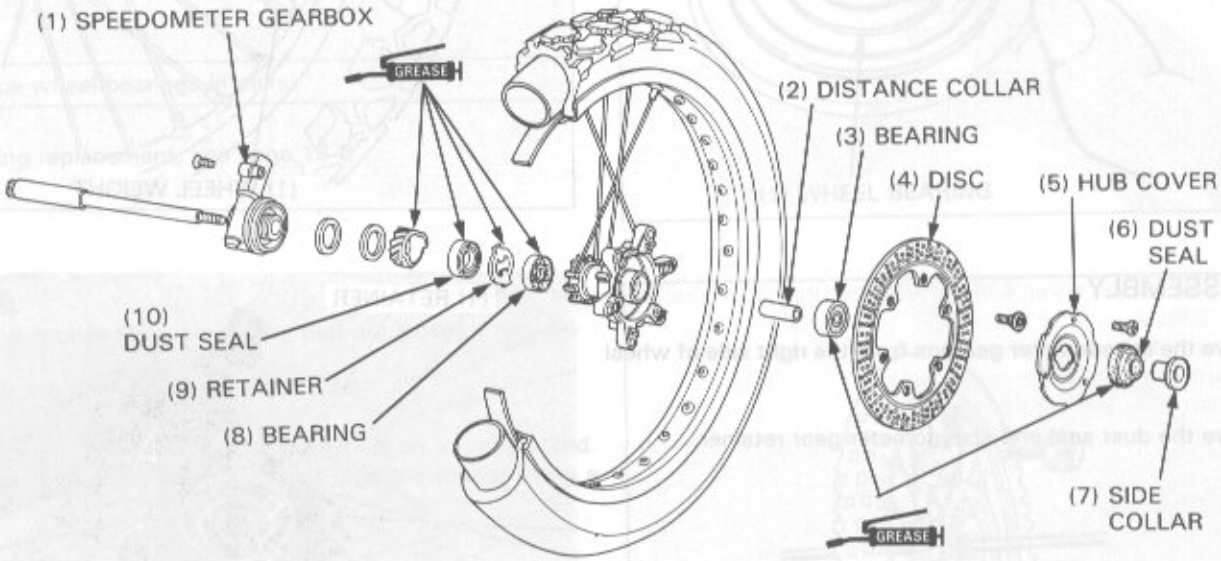

Pack all bearing cavities with grease.

Drive in the right bearing first until it seats.
Install the distance collar and drive in the left wheel bearing.

NOTE

- Install the bearings with the sealed faces toward the outside. Be sure to dirve the bearing in squarely.

TOOLS:

Driver	**07749–0010000**
Attachment, 32 x 35 mm	**07746–0010100**
Pilot, 15 mm	**07746–0040300**

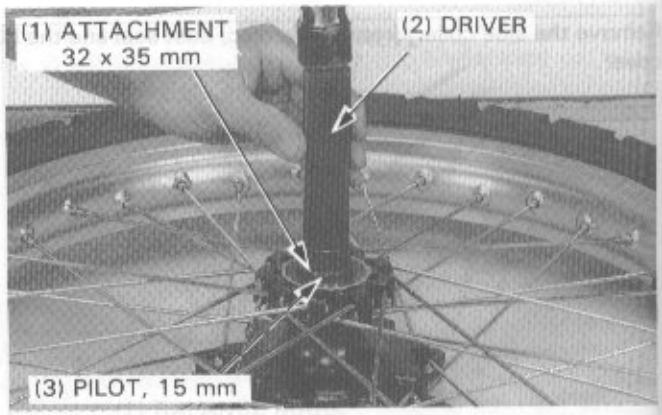

Install the hub cover and tighten the screws.

TORQUE: 1.5 N·m (0.15 kg-m, 1.1 ft-lb)

Install the brake disc and tighten the bolts to the specified torque.

TORQUE: 40 N·m (4.0 kg-m, 29 ft-lb)

Apply grease to the dust seal lips and install it.
Install the left side collar.

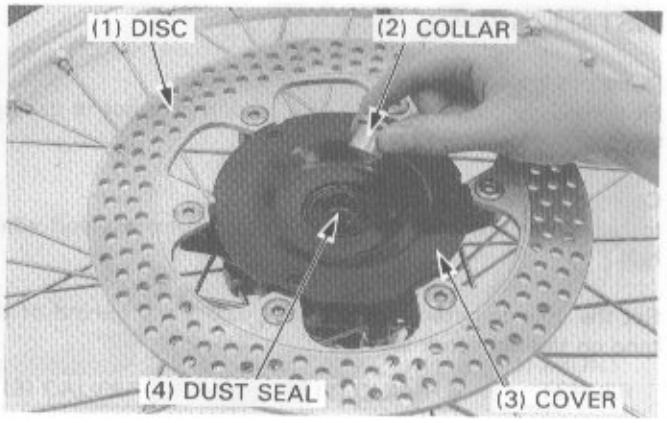

Apply grease to the speedometer gear retainer and install it, aligning the tabs with the grooves in the wheel hub.

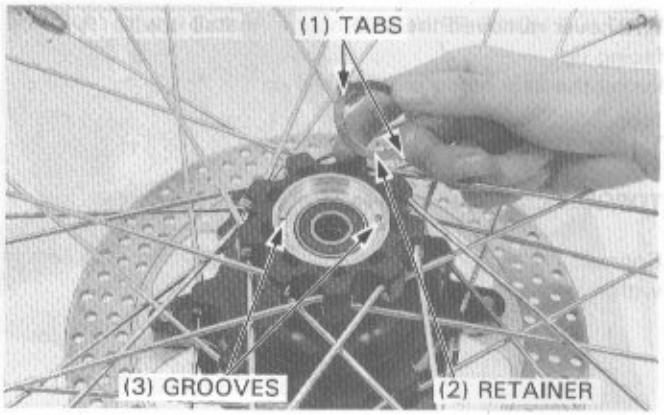

Apply grease to the speedometer gearbox and gear.
Install the speedometer gear and two washers into the gearbox.

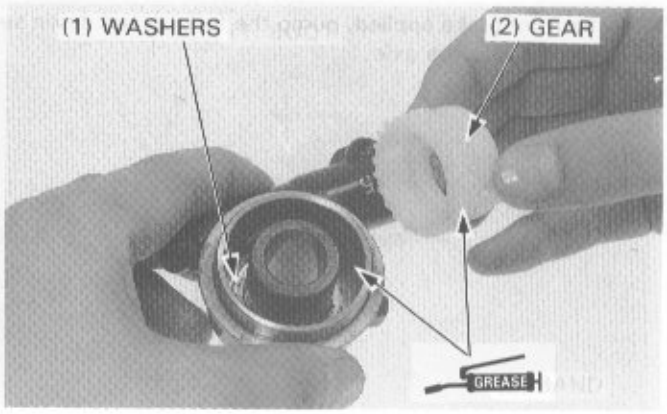

Apply grease to the dust seal lip and install it.

Install the speedometer gearbox into the wheel hub, aligning the tangs with the slots.

Clean the brake disc with a high quality degreasing agent.

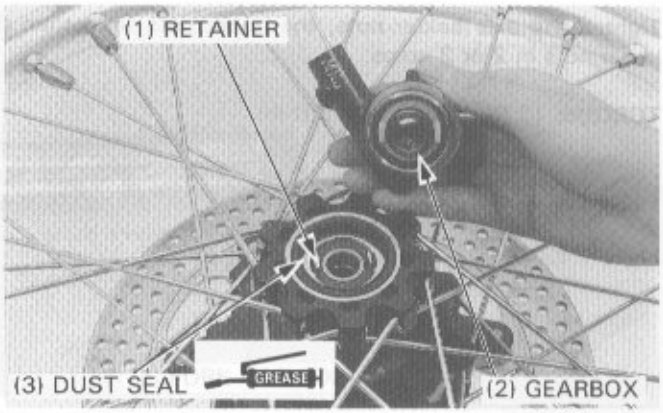

INSTALLATION

Place the front wheel between the fork legs.
Fit the caliper over the brake disc, taking care not to damage the brake pads.

Clean the axle and holder.
Install the axle through the speedometer gearbox and wheel hub.

Set the speedometer gearbox tab against the behind of the tang on the right fork slider.

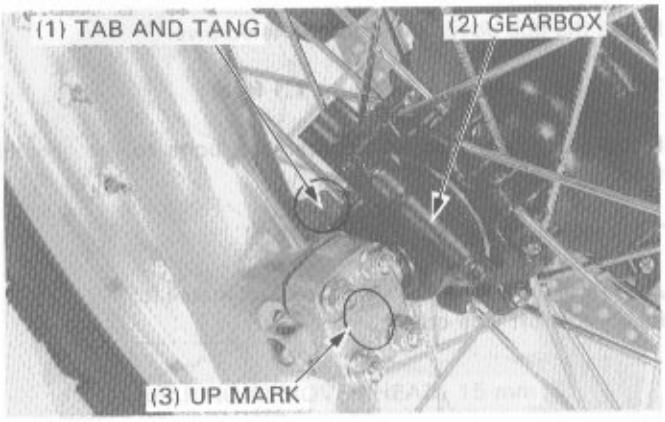

Whenever removed the axle holder, install it with "UP" mark facing up.
Install the axle holder nuts loosely.

Tighten the axle shaft.

TORQUE: 65 N·m (6.5 kg-m, 47 ft-lb)

Connect the speedometer cable to the gearbox and secure it with a screw.

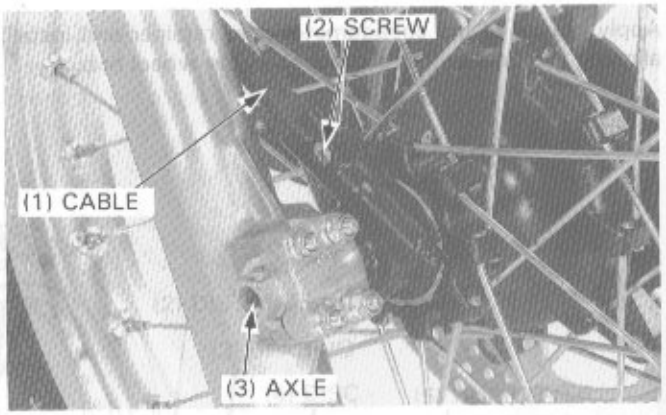

With the front brake applied, pump the fork up and down several times to seat the axle.

Tighten the axle holder nuts, the upper nuts first, then the lower nuts in 2 or 3 steps.

TORQUE: 12 N·m (1.2 kg-m, 9 ft-lb)

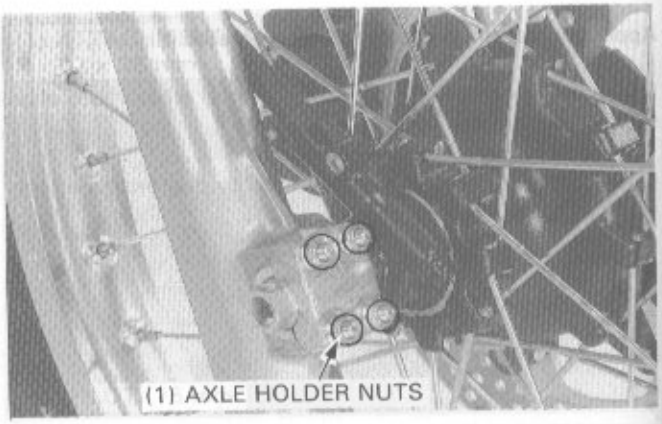

FORK LEGS

REMOVAL

Remove the following components:
- Front wheel (page 13-5).
- Brake caliper from the left fork leg.
- Brake hose clamp from the left fork leg.
- Front fender and stabilizer.

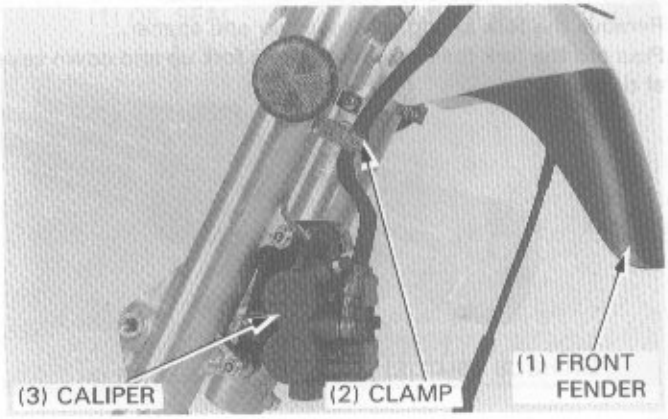

Loose the fork cap.
Loose the upper and lower pinch bolts and remove the fork leg.

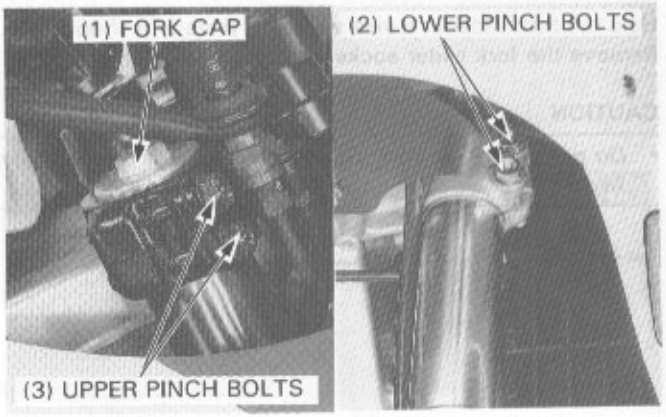

DISASSEMBLY

Loosen the boot band screw and remove the fork boot and boot band.

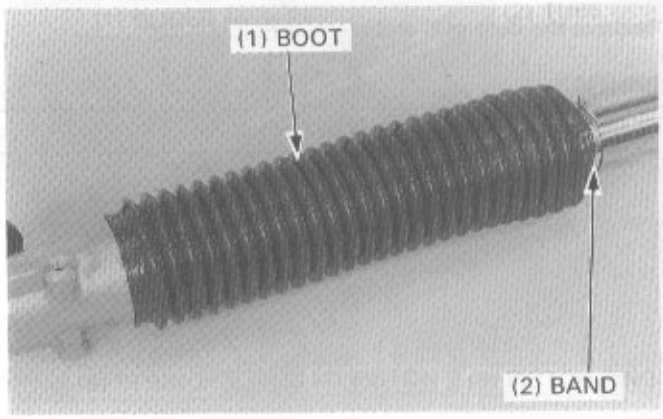

Remove the fork cap bolt.

⚠WARNING

- ***The cap bolts are under spring pressure. Take care when removing and wear eye and face protection.***

Check the O-ring for damage.

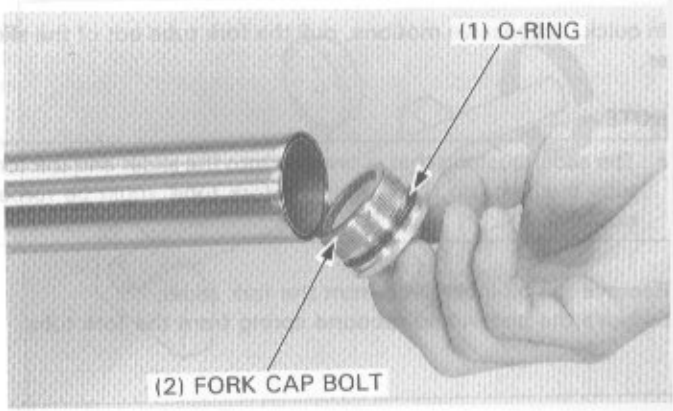

Remove the fork spring, seat washer and spacer.
Pour out the fork fluid by pumping the fork up and down several times.

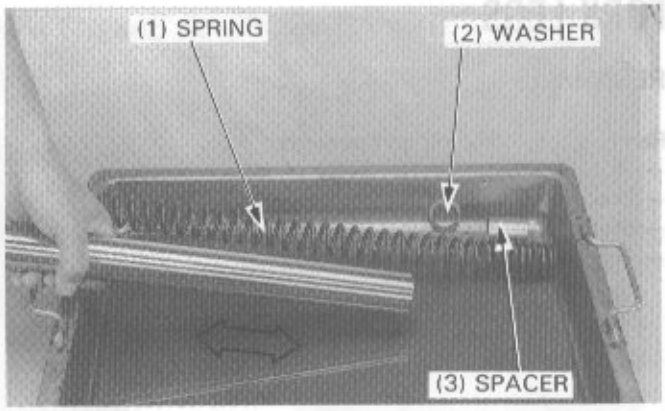

Hold the fork slider in a vise with soft jaws or a shop towel.
Remove the fork slider socket bolt.

CAUTION

- *Do not distort the fork slider by clamping it too tightly in a vice.*

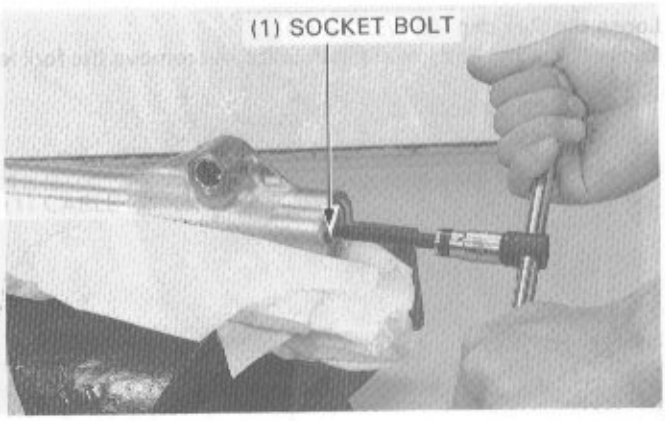

Remove the dust seal and stopper ring.

CAUTION

- *Be careful not to damage the fork tube.*

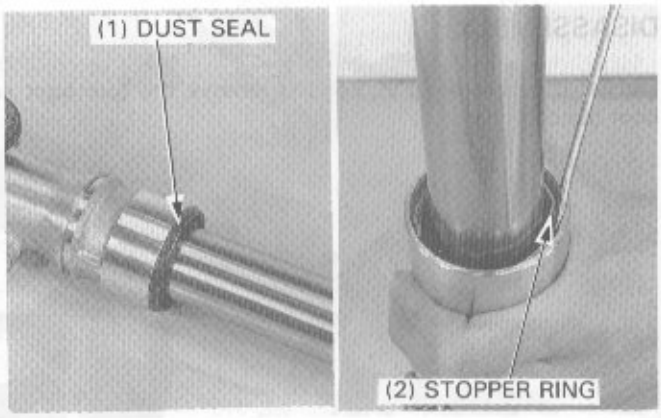

In quick, successive motions, pull the fork tube out of the slider.

NOTE

- The slider bushing that is pressed into the slider and the fork tube bushing, on the end of the fork tube, must be forced out.

Remove the oil lock piece from the fork slider.
Remove the piston and rebound spring from the fork tube.

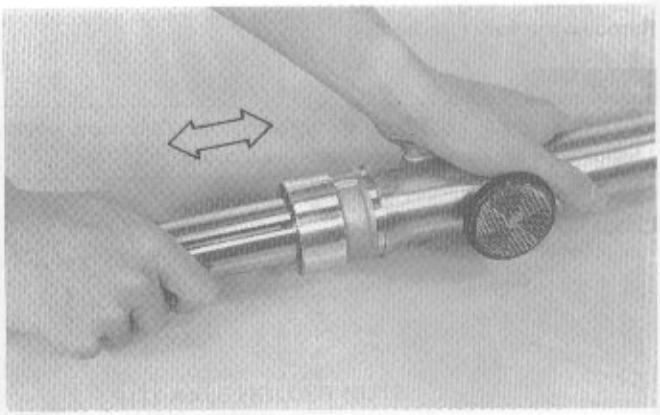

Remove the oil seal, back-up ring slider bushing from the fork tube.
Do not remove the fork tube bushing until inspection determines it is necessary (page 13-14).

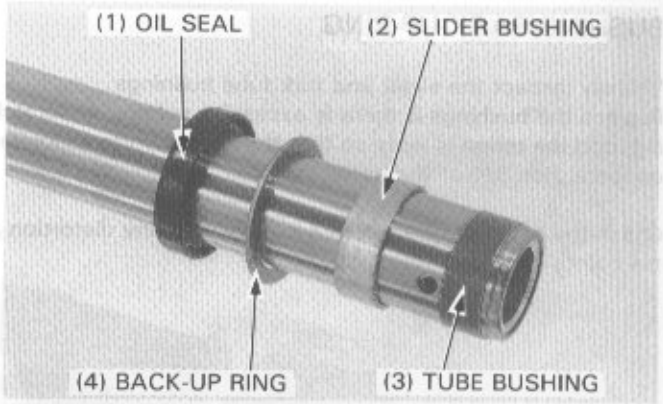

INSPECTION

- **FORK SPRING**

Measure the fork spring free length.

SERVICE LIMIT: 565.5 mm (22.26 in)

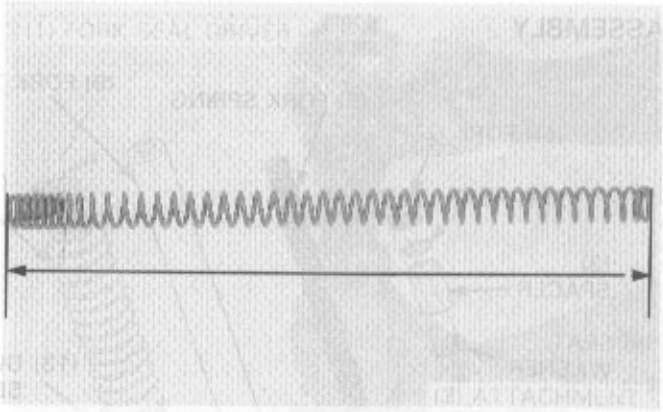

- **FORK TUBE/FORK PISTON/SLIDER**

Check the fork tube, fork slider and piston for score marks, scratches, excessive or abnormal wear.
Replace if necessary.

Check the piston ring for wear or damage.
Check the rebound spring for wear or damage.

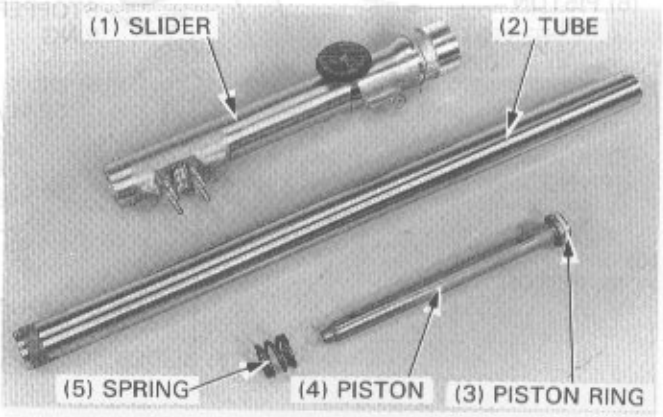

Set the fork tube on V blocks and measure the runout.
The actual runout is 1/2 of the total indicator reading.

SERVICE LIMIT: 0.2 mm (0.01 in)

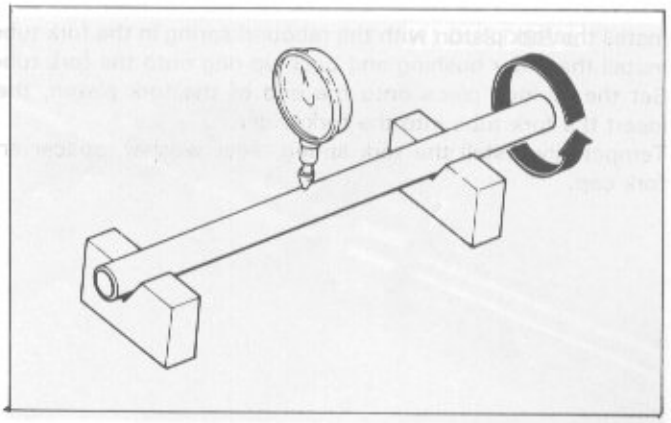

BUSHING/BACK-UP RING

Visually inspect the slider and fork tube bushings.
Replace the bushings if there is excessive scoring or scratching, or if the teflon is worn so that the copper surface appears on more than 3/4 of the entire surface.

Check the back-up ring; replace it if there is any distortion at the points shown.

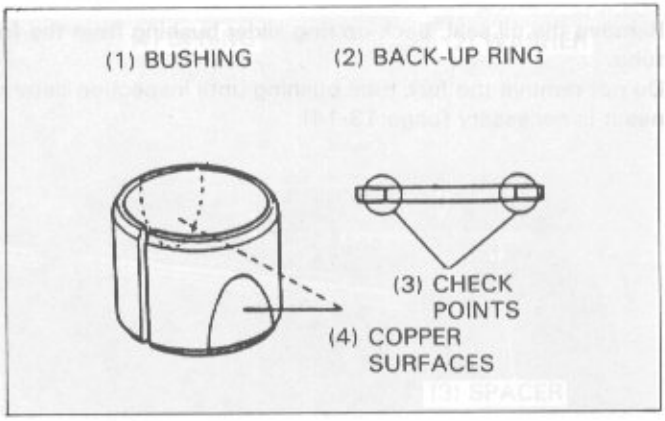

ASSEMBLY

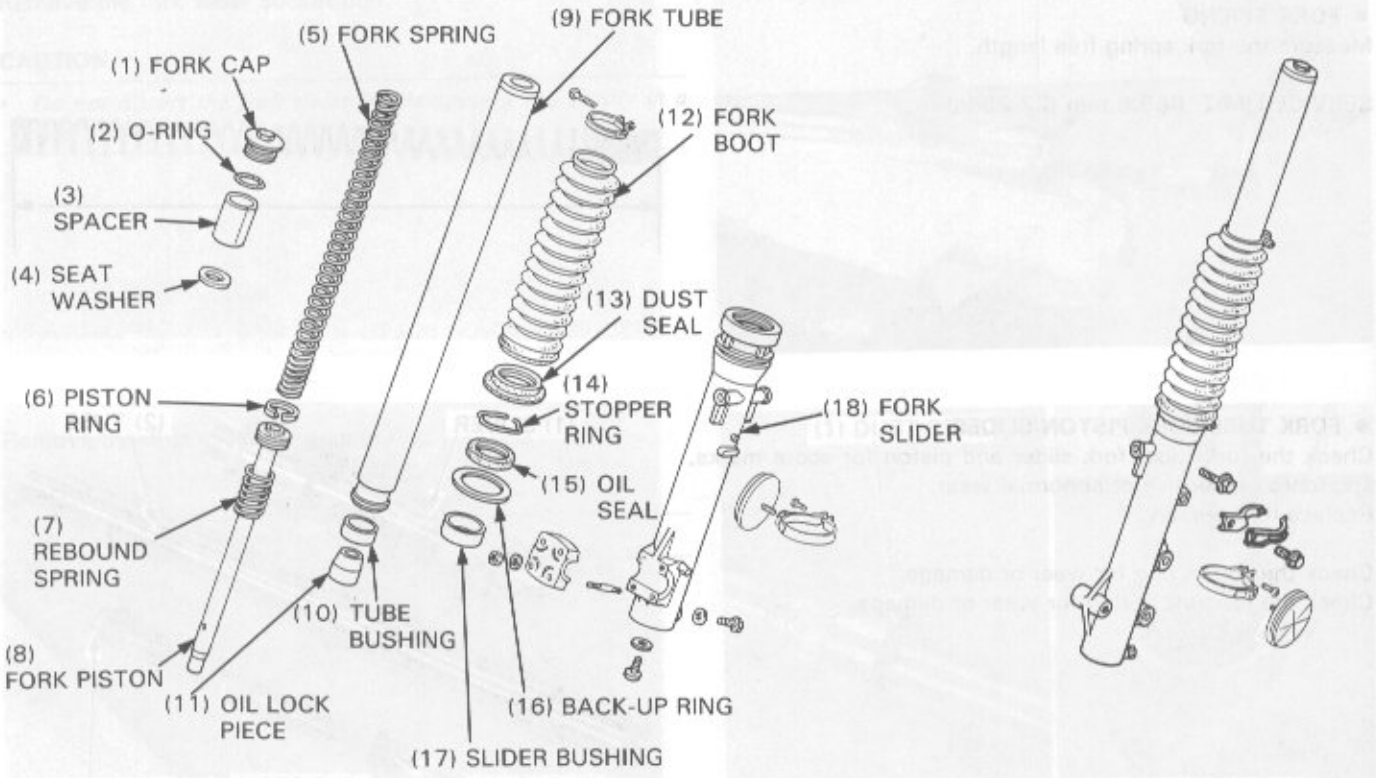

Install the fork piston with the rebound spring in the fork tube.
Install the slider bushing and back-up ring onto the fork tube.
Set the oil lock piece onto the end of the fork piston, then insert the fork tube into the fork slider.
Temporarily install the fork spring, seat washer, spacer and fork cap.

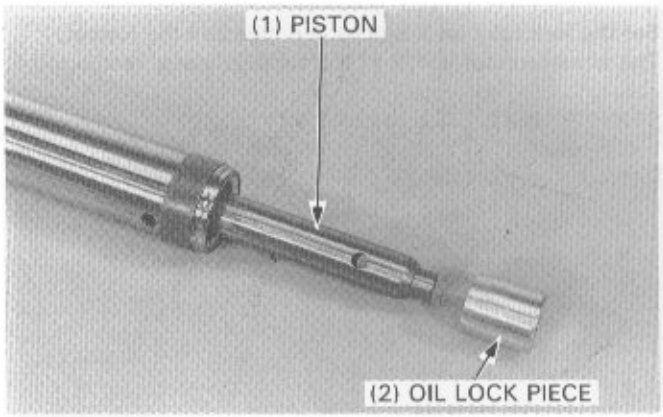

Place the fork slider in a vise with soft jaws or a shop towel. Apply a locking agent to the socket bolt threads and tighten the bottom socket bolt.

TORQUE: 20 N·m (2.0 kg-m, 14 ft-lb)

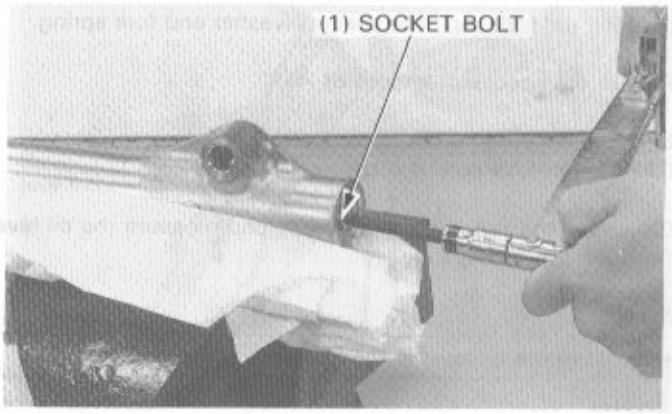

Coat a new oil seal with ATF (see next page) and install it onto the fork tube with the marks facing out.

Drive the oil seal in place using a fork seal driver and attachment.

TOOLS:

Fork seal driver	**07947—KA50100**
Fork seal driver attachment	**07947—KF00100**

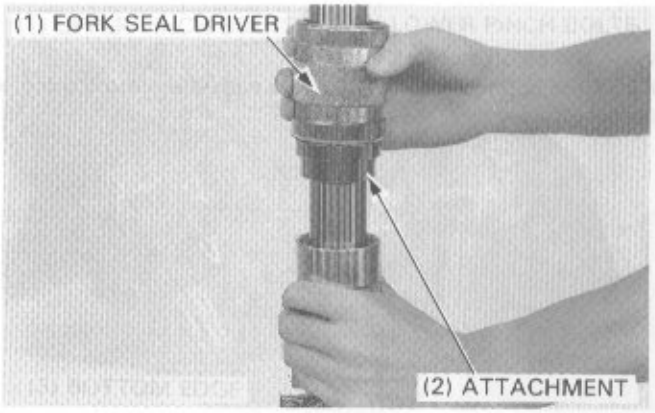

Install the stopper ring into the groove of the fork slider securely.

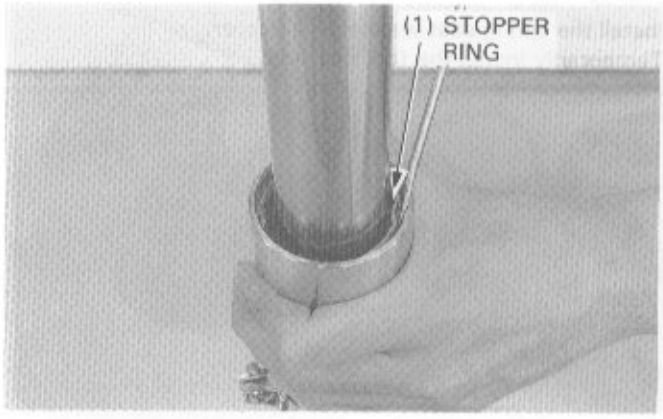

Install the dust seal securely.

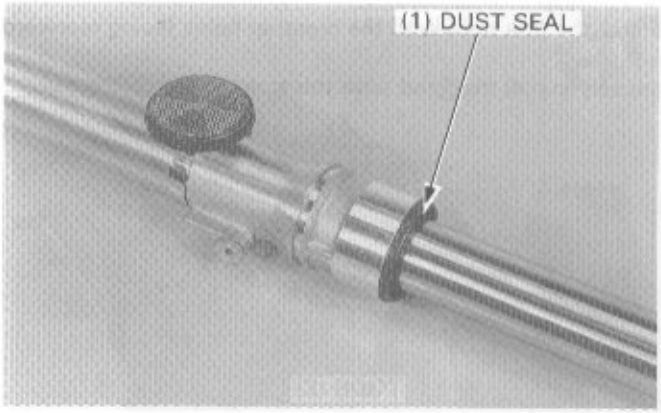

Remove the fork cap bolt, spacer, washer and fork spring.

Pour in the specified amount of ATF.

SPECIFIED FLUID: ATF
CAPACITY: 549 cc (18.6 US oz, 19.3 Imp oz)

Compress the fork tube all the way and measure the oil level from the top of the tube.

NOTE

- Be sure the oil level is the same in both fork tubes.

STANDARD OIL LEVEL: 125 mm (4.9 in)

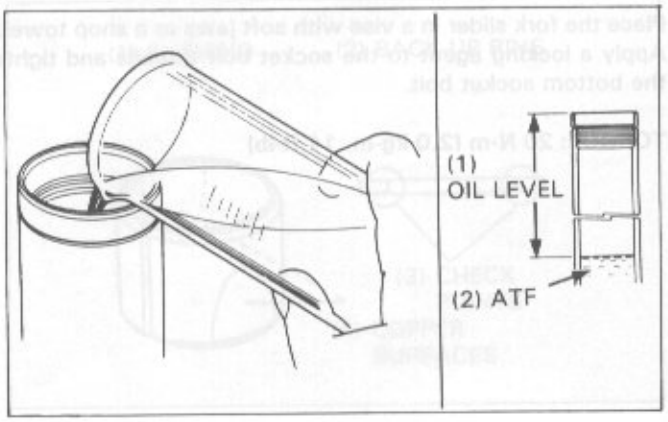

Wipe any oil off the fork spring.
Install the spring into the fork tube with the narrow pitch end facing down.

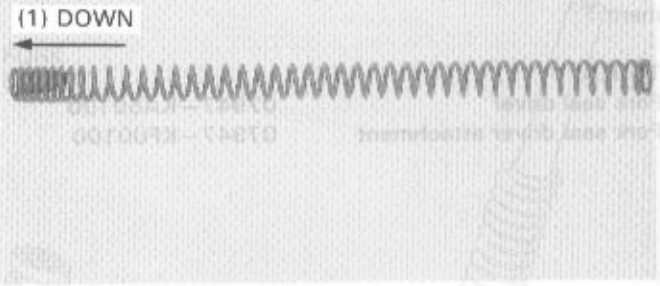

Install the spring seat washer and spacer.
Temporarily install the fork cap bolt.

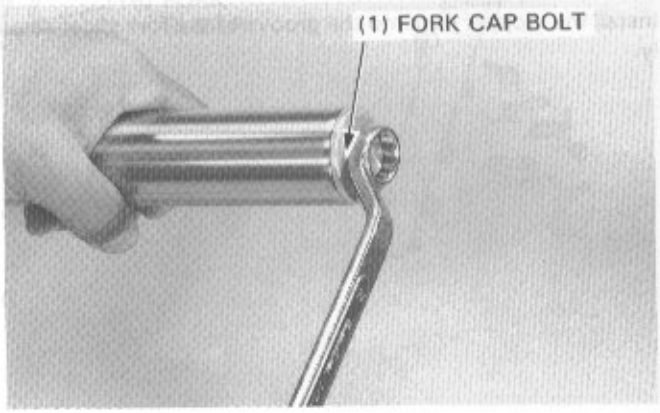

Install the fork boot with the breather holes facing rearward.

Loosely install the band with the screw head facing out.

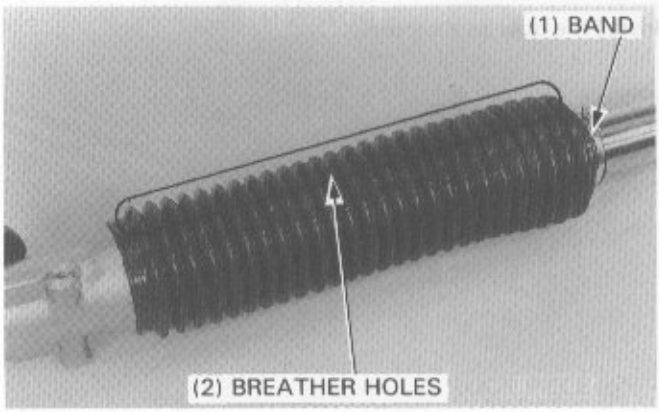

INSTALLATION

Install the fork tube through the steering stem and top bridge while rotating.

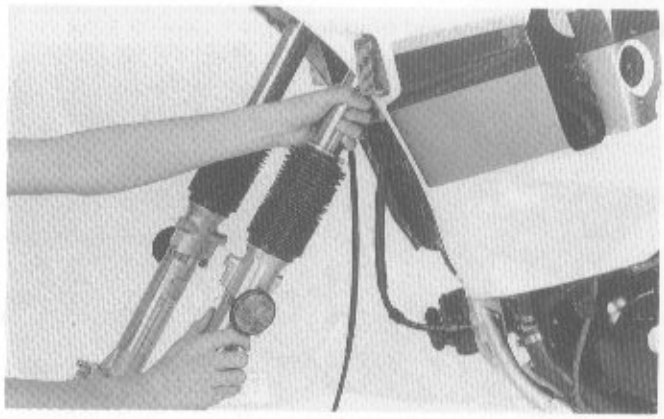

The bottom edge of the fork cap should be flush with the top of the fork bridge.

Tighten the upper and lower fork pinch bolts.

TORQUE:
Upper pinch bolt: 27 N·m (2.7 kg-m, 20 ft-lb)
Lower pinch bolt: 35 N·m (3.5 kg-m, 25 ft-lb)

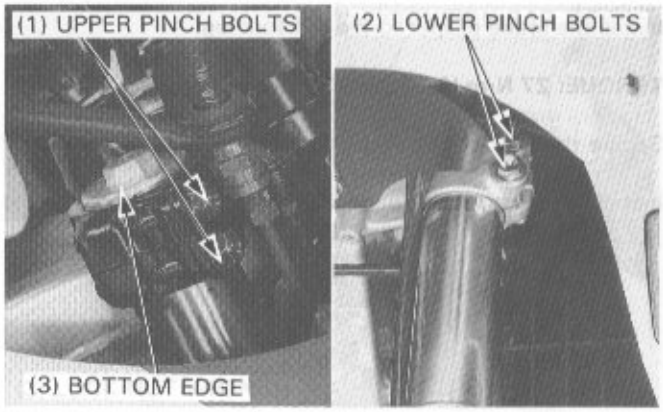

Tighten the fork cap bolt to the specified torque.

TORQUE: 23 N·m (2.3 kg-m, 17 ft-lb)

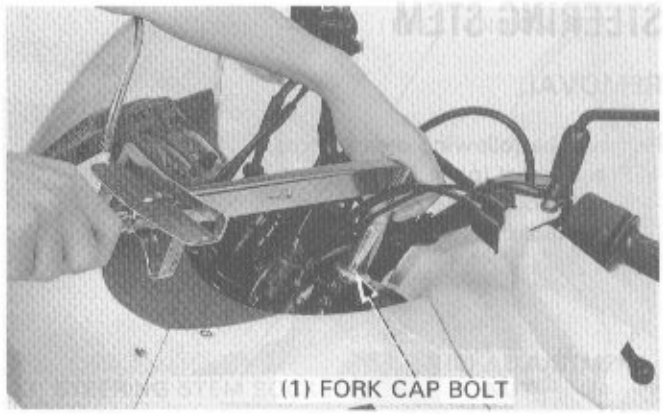

Push the fork boots up until they just touch the steering stem and tighten the boot bands.

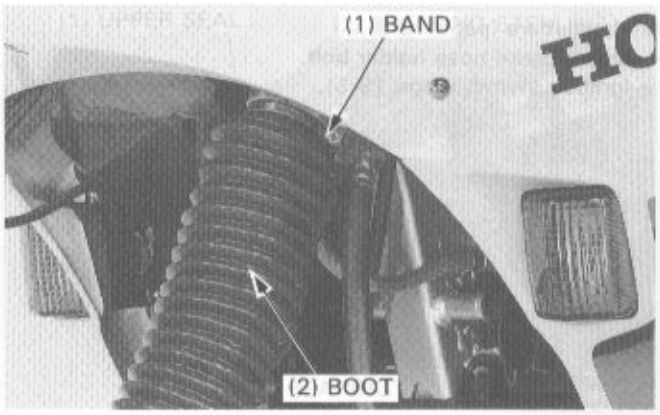

Install the stabilizer and front fender.

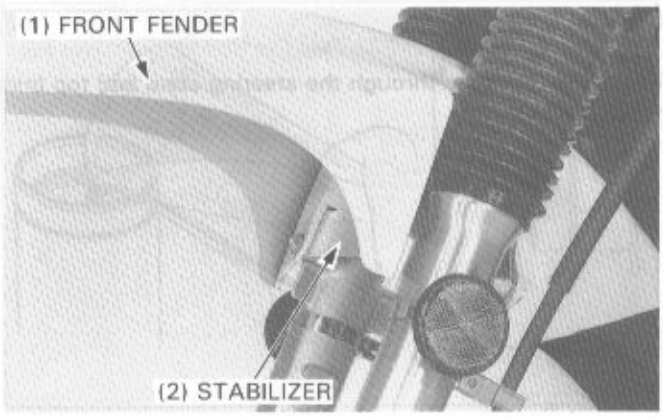

Install the brake caliper to the left fork leg.

TORQUE: 27 N·m (2.7 kg-m, 20 ft-lb)

Secure the brake hose with the clamp.

Install the front wheel (page 13-10).

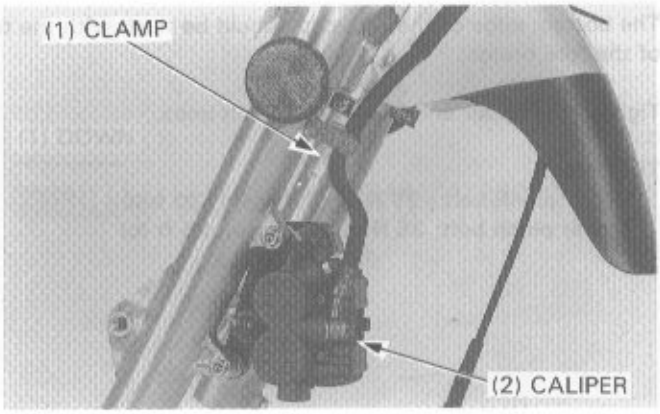

STEERING STEM

REMOVAL

Remove the following components.
- Front wheel (page 13-5).
- Lower brake hose holder bolts.
- Front guard plate.

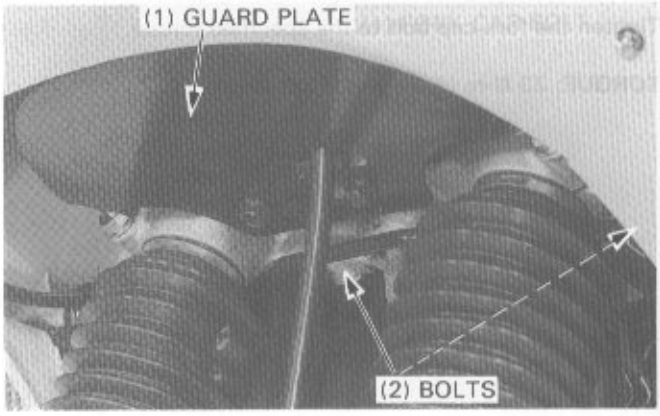

- Handlebars (page 13-3).
- Upper brake hose holder bolt.
- Ignition switch (page 19-5).

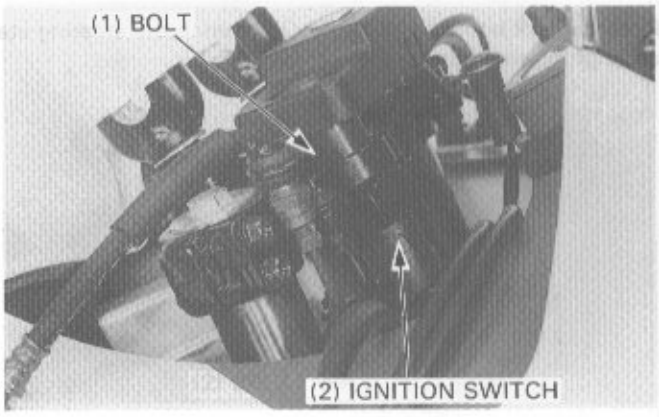

Remove the bolt, side stand indicator and the fuse box.

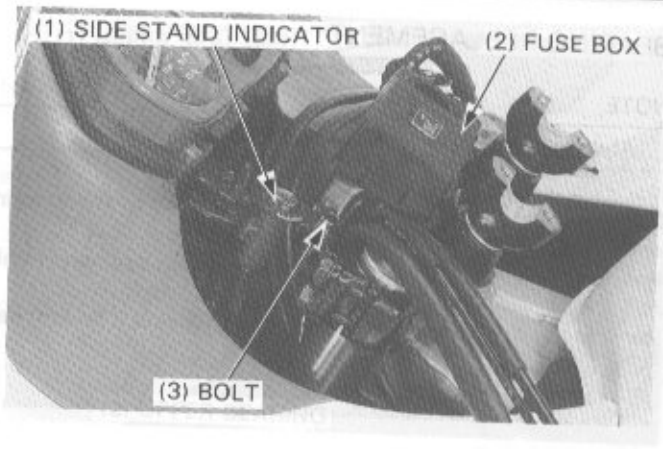

Remove the following.
– steering stem nut.
– fork legs (page 13-11).

TOOLS:

Lock nut wrench, 30 x 32 mm	**07716–0020400 or equivalent commercially available in U.S.A.**
Extension bar	**07716–0020500 or equivalent commercially available in U.S.A.**

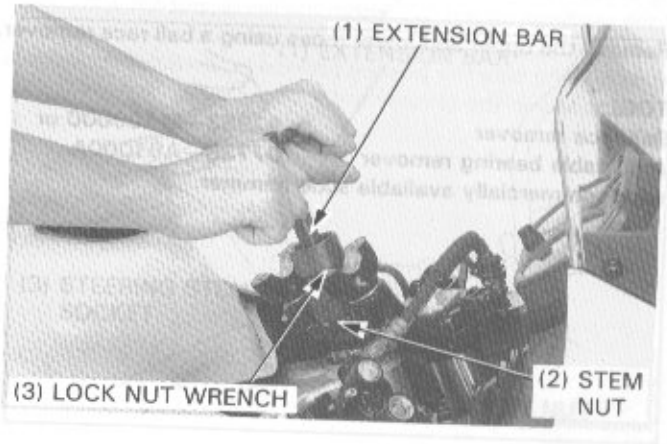

Remove the steering bearing adjustment nut.

TOOL:

Steering stem socket	**07916–3710100**
Extension bar	**07716–0020500 or equivalent commercially available in U.S.A.**

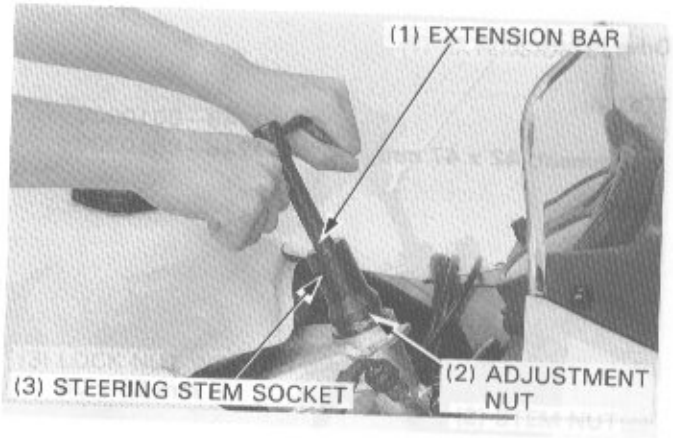

Remove the following.
– upper seal.
– steering stem and upper bearing.

Check the bearings and outer races for wear or damage. Replace if necessary.

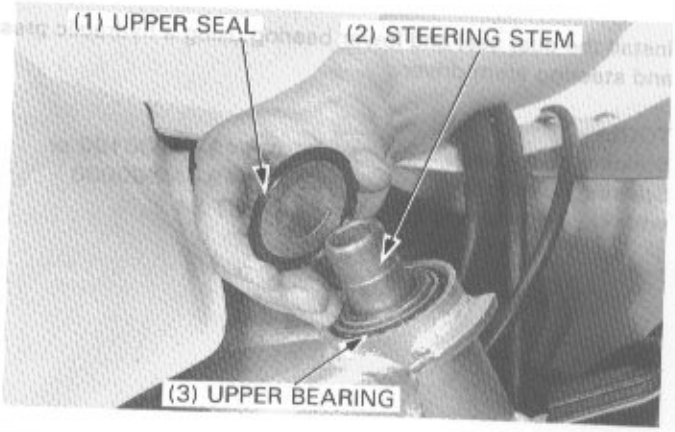

BEARING REPLACEMENT

NOTE

- Always replace the bearing and race as a set.

Install the steering stem nut onto the top end of the steering stem to prevent the threads from damaging.
Remove the lower bearing and dust seal using a punch or chisel.
Replace the dust seal with a new one whenever it is removed.

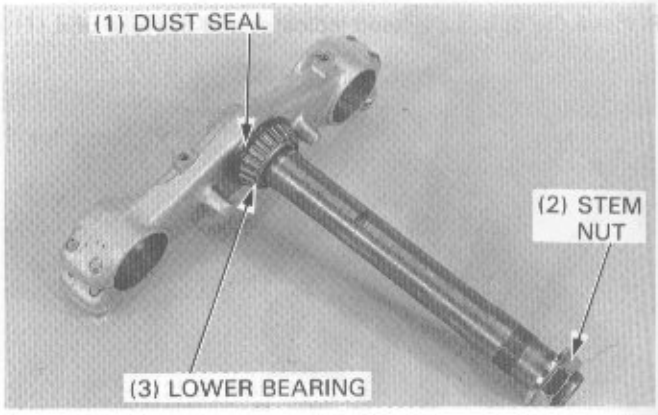

Remove the upper and lower races using a ball race remover.

TOOL:

Ball race remover	**07953—MA00000 or**
Adjustable bearing remover with commercially available slide hammer.	**07736—A01000A**

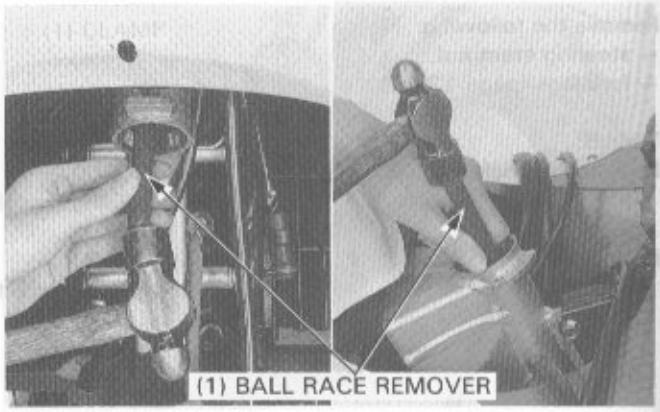

Drive in new inner races.

TOOLS:

Driver	**07749—0010000**
Attachment, 42 x 47 mm	**07746—0010300**

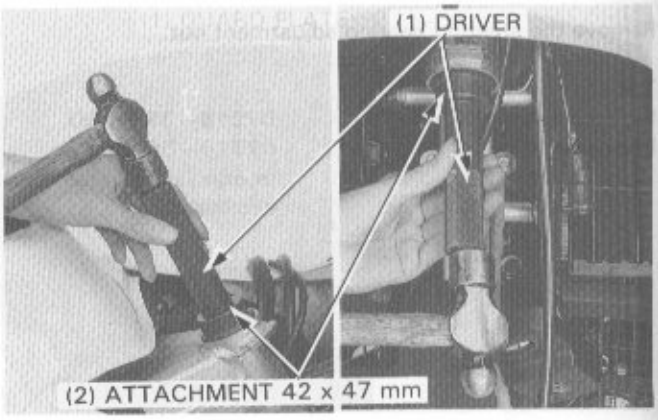

Install the dust seal and lower bearing using a hydraulic press and steering stem driver.

TOOL:

Steering stem driver	**07946—4300100 or**
Steering stem driver with steering bearing attachment GN HT 54	**07946—MB00000**

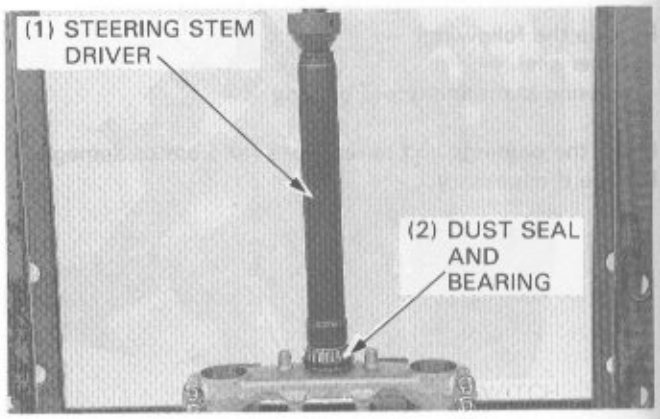

INSTALLATION

Pack the upper and lower bearing cavities with grease.
Insert the steering stem through the steering head from the bottom.
Install the upper bearing.

Pack the upper seal with grease.
Install the upper seal onto the steering stem.

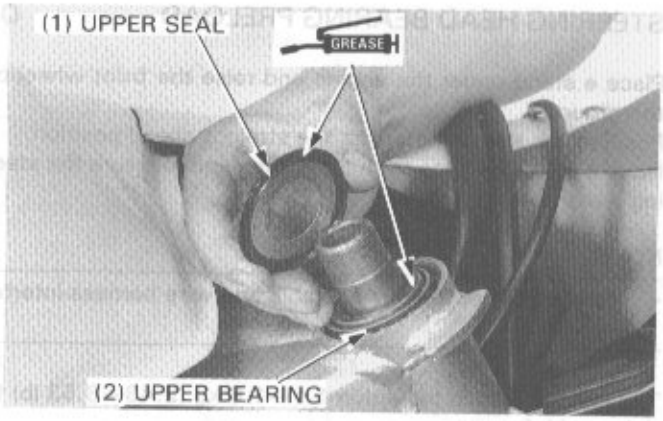

Install the steering bearing adjustment nut and tighten it with the steering stem socket.

TORQUE: 3 N·m (0.3 kg-m, 22 ft-lb)

NOTE

- Tighten the nut with the steering stem pushed up.

TOOLS:

Steering stem socket	**07916—3710100**
Extension bar	**07716—0020500**
	or equivalent commercially available in U.S.A.

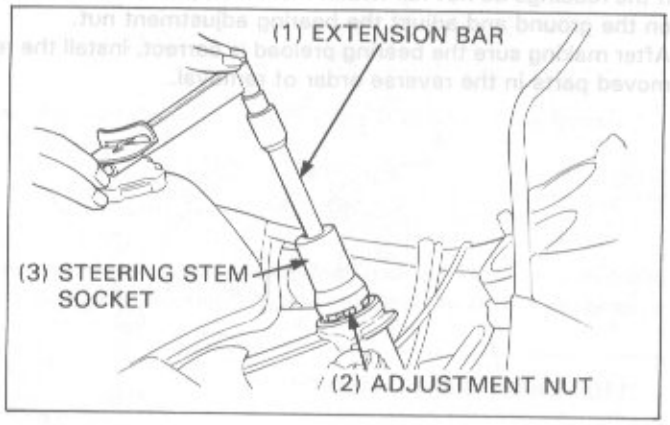

Turn the steering stem lock-to-lock several times to seat the bearings. Repeat the bearing tightening and steering stem turning sequence two more times.

Install the fork bridge.
Temporarily install the fork legs.
Tighten the steering stem nut.

TORQUE: 100 N·m (10.0 kg-m, 72 ft-lb)

TOOLS:

Lock nut wrench, 30 x 32 mm	**07716—0020400**
	or equivalent commercially available in U.S.A.
Extension bar	**07716—0020500**
	or equivalent commercially available in U.S.A.

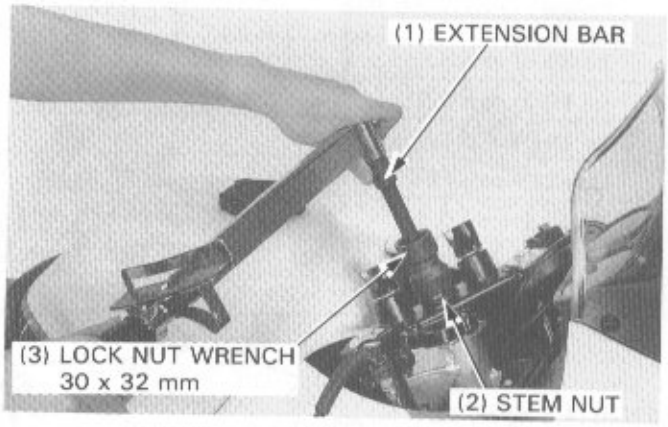

Recheck the steering stem adjustment.

Install the following parts:
– Fork legs (page 13-17).
– Brake hose holders.
– Front wheel (page 13-10).
– Side stand indicator and fuse box.
Check the steering bearing preload (page 13-22).

STEERING HEAD BEARING PRELOAD

Place a stand under the engine and raise the front wheel off the ground.
Position the steering stem to the straight ahead position.
Hook a spring balance to the fork tube and measure the steering head bearing preload.

NOTE

- Make sure that there is no cable and wire harness interference.

The preload should be within 1.1—1.6 kg (2.43—3.53 lb) for right and left turns.
If the readings do not fall within the limits, put the front wheel on the ground and adjust the bearing adjustment nut.
After making sure the bearing preload is correct, install the removed parts in the reverse order of removal.

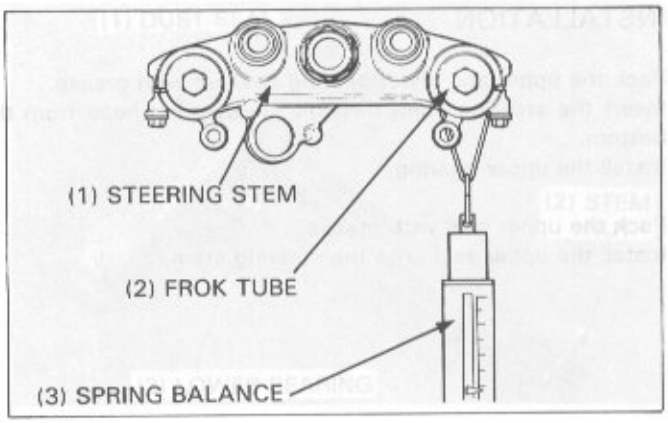

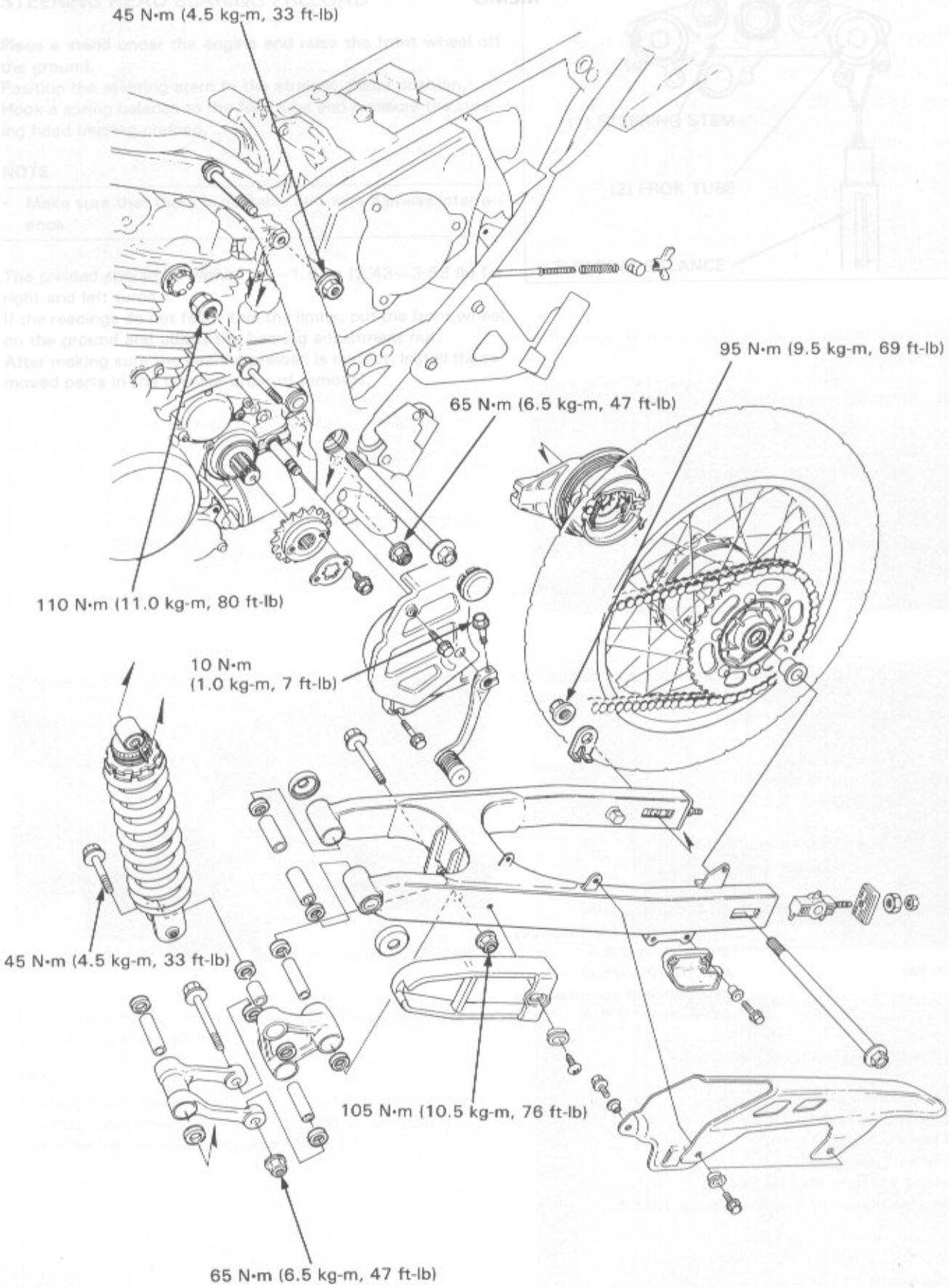
45 N·m (4.5 kg-m, 33 ft-lb)
95 N·m (9.5 kg-m, 69 ft-lb)
65 N·m (6.5 kg-m, 47 ft-lb)
110 N·m (11.0 kg-m, 80 ft-lb)
10 N·m
(1.0 kg-m, 7 ft-lb)
45 N·m (4.5 kg-m, 33 ft-lb)
105 N·m (10.5 kg-m, 76 ft-lb)
65 N·m (6.5 kg-m, 47 ft-lb)

14. REAR WHEEL/BRAKE/SUSPENSION

SERVICE INFORMATION	14-1	BRAKE PEDAL	14-10
TROUBLESHOOTING	14-2	SHOCK ABSORBER	14-10
REAR WHEEL	14-3	SHOCK LINKAGE	14-14
REAR BRAKE	14-7	SWINGARM	14-16

SERVICE INFORMATION

GENERAL

- A work stand or box is required to support the motorcycle.

CAUTION

- *Do not support motorcycle by placing jack or other support under the oil filter.*

- Use only genuine Honda replacement fasteners for the rear suspension. Note the installation direction of the bolts.

⚠WARNING

- ***The shock absorber contains nitrogen gas under high pressure. Do not allow fire or heat near the shock absorber.***
- ***Before disposal of the shock absorber, release the nitrogen (see page 14-12).***
- ***Inhaled asbestos fibers have been found to cause respiratory disease and cancer. Never use an air hose or dry brush to clean brake assemblies. In the United States, use an OSHA-approved vacuum cleaner or alternate method approved by OSHA designed to minimize the hazard caused by airborne asbestos fibers.***

SPECIFICATION

ITEM		STANDARD	SERVICE LIMIT
Rear wheel runout	Radial	—	2.0 mm (0.08 in)
	Axial	—	2.0 mm (0.08 in)
Rear axle runout		—	0.2 mm (0.01 in)
Rear brake drum I.D.		130.0 mm (5.12 in)	131 mm (5.2 in)
Rear brake lining thickness		4.0 mm (0.16 in)	2.0 mm (0.08 in)
Shock absorber spring free length		268.5 mm (10.57 in)	263.0 mm (10.35 in)
Rear suspension damper compression		33 kg (72.75 lb)	28 kg (61.73 lb)

TORQUE VALVE

Spokes	3.8 N·m (0.38 kg-m, 2.7 ft-lb)
Driven sprocket nut	44 N·m (4.4 kg-m, 32 ft-lb)
Rear axle nut	95 N·m (9.5 kg-m, 69 ft-lb)
Shock absorber lower mount lock nut	68 N·m (6.8 kg-m, 49 ft-lb)
Shock absorber spring lock nut	90 N·m (9.0 kg-m, 65 ft-lb)
Shock absorber mounting bolt (upper/lower)	45 N·m (4.5 kg-m, 33 ft-lb)
Shock arm-to-swingarm nut	105 N·m (10.5 kg-m, 76 ft-lb)
Shock link-to-shock arm nut	65 N·m (6.5 kg-m, 47 ft-lb)
Shock link-to-frame nut	65 N·m (6.5 kg-m, 47 ft-lb)
Swingarm/engine pivot nut	110 N·m (11.0 kg-m, 80 ft-lb)

TOOLS

Special	
Needle bearing driver	07946—KA50000
Driver shaft	07946—MJ00100
Common	
Pin spanner	89201—KA4-811
	89202—KA4-811
Bearing remover shaft	07746—0050100
Bearing remover head, 17 mm	07746—0050500
Driver	07749—0010000
Attachment, 37 x 40 mm	07746—0010200
Attachment, 42 x 47 mm	07746—0010300
Attachment, 32 x 35 mm	07746—0010100
Pilot, 17 mm	07746—0040400
Attachment, 24 x 26 mm	07746—0010700

TROUBLESHOOTING

Wobble or vibration in motorcycle
- Bent rim
- Loose wheel bearing(s)
- Loose or bent spokes
- Damaged tire
- Axle nut tightened properly
- Swingarm pivot bearing worn
- Chain adjusters not adjusted equally
- Bent frame or swingarm

Soft suspension
- Weak spring
- Improper shock absorber spring preload

Hard suspension
- Improper shock absorber spring preload
- Bent shock absorber rod
- Swingarm pivot bearings damaged
- Bent frame or swingarm

Suspension noise
- Faulty rear damper
- Loose fasteners
- Worn shock linkage pivot bushing(s)

Poor brake performance
- Improper brake adjustment
- Worn brake shoes
- Brake linings oily, greasy or dirty
- Worn brake cam
- Worn brake drum
- Brake arm serrations improperly engaged
- Brake shoes worn at cam contact area

REAR WHEEL

REMOVAL

Raise the rear wheel off the ground by placing a box or workstand under the engine.

CAUTION

- *Do not support the motorcycle by placing a jack or other support under the oil filter.*

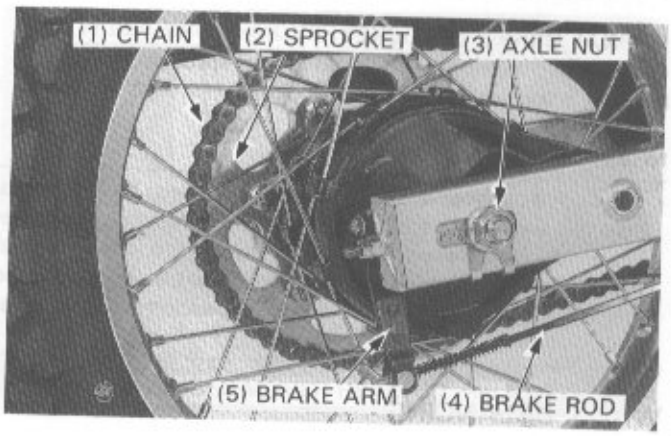

Loosen the chain adjuster on each side.
Remove the following components:
– Brake rod from the brake arm.
– Axle nut and axle.
– Chain from the sprocket.
– Rear wheel.

INSPECTION

• AXLE

Set the axle on V blocks and measure the runout.
The actual runout is 1/2 of the total indicator reading.

SERVICE LIMIT: 0.2 mm (0.01 in)

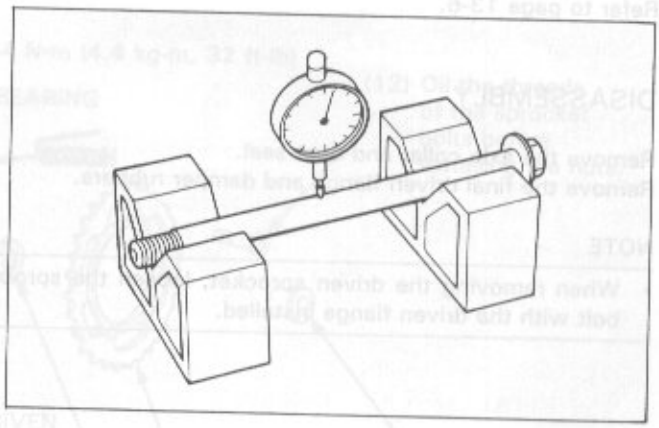

• WHEEL BEARING

Remove the driven flange (page 14-4).
Turn the inner race of each bearing with your finger.
The bearings should turn smoothly and quietly.
Also check that the bearing outer race fits tightly in the hub and flange.
Remove and discard the bearings if the races do not turn smoothly, quietly, or if they fit loosely in the hub and flange.

NOTE

- Replace wheel bearings as a set.

For bearing replacement, see pages 14-4 and 14-5.

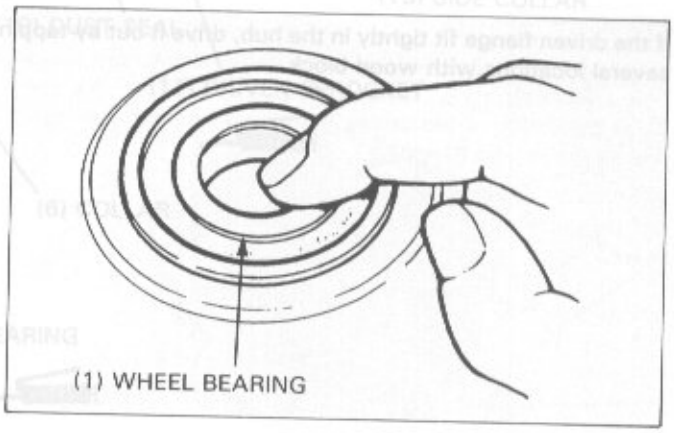

• WHEEL

Check the spokes and tighten any that are loose.

TORQUE: 3.8 N·m (0.38 kg-m, 2.7 ft-lb)

Check the rim runout by placing the wheel on a truing stand.
Turn the wheel by hand and measure the runout using a dial indicator.

SERVICE LIMITS:
RADIAL: 2.0 mm (0.08 in)
AXIAL: 2.0 mm (0.08 in)

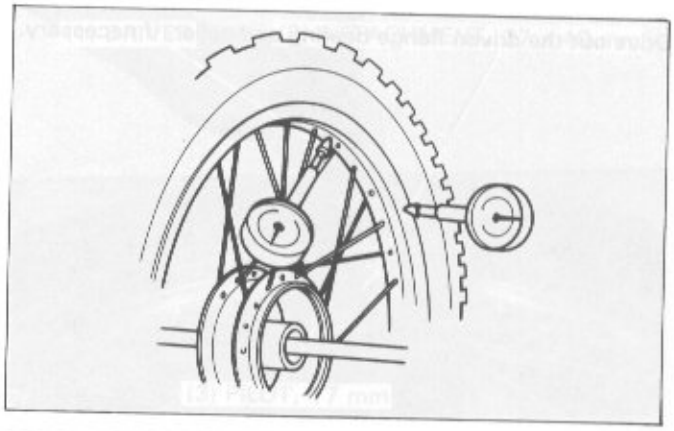

• FINAL DRIVEN SPROCKET

Check the condition of the final driven sprocket teeth. Replace a worn or damaged sprocket.

NOTE

- The drive chain and drive sprocket must also be inspected if the driven sprocket is worn or damaged. Never install a new drive chain on worn sprockets or a worn chain on new sprockets. Both chain and sprocket must be in good condition or a new replacement chain or sprockets will wear rapidly.

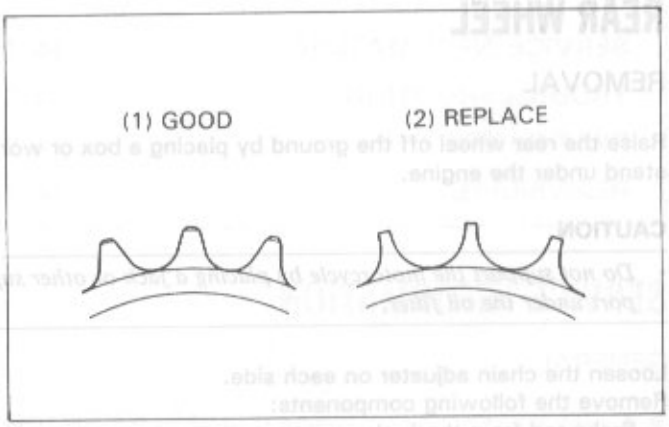

WHELL BALANCING

Refer to page 13-6.

DISASSEMBLY

Remove the axle collar and dust seal.
Remove the final driven flange and damper rubbers.

NOTE

- When removing the driven sprocket, loosen the sprocket bolt with the driven flange installed.

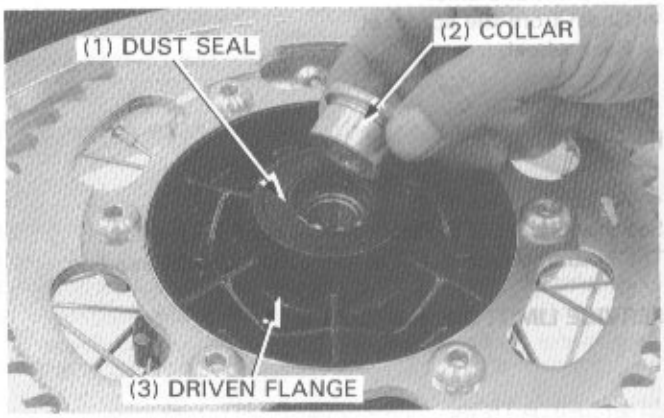

If the driven flange fit tightly in the hub, drive it out by tapping several locations with wood block.

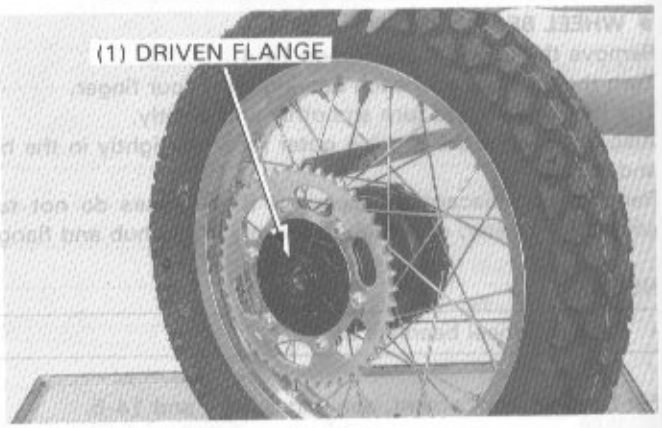

Drive out the driven flange bearing and collar, if necessary.

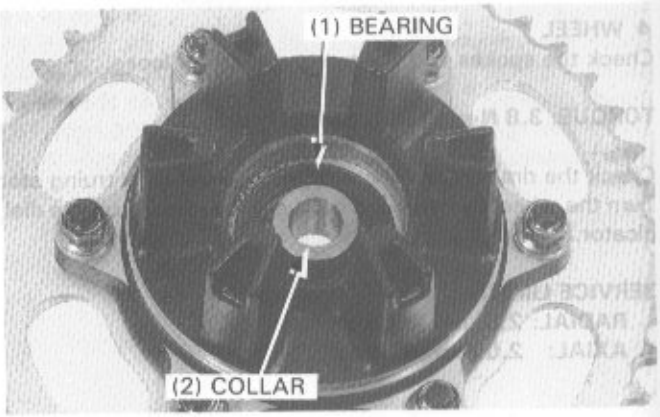

Drive out the wheel bearings and the distance collar.

NOTE

- Whenever the bearings are removed, they should be replaced with new ones.

TOOLS:

Bearing remover shaft	**07746–0050100**
Bearing remover head, 17 mm	**07746–0050500**

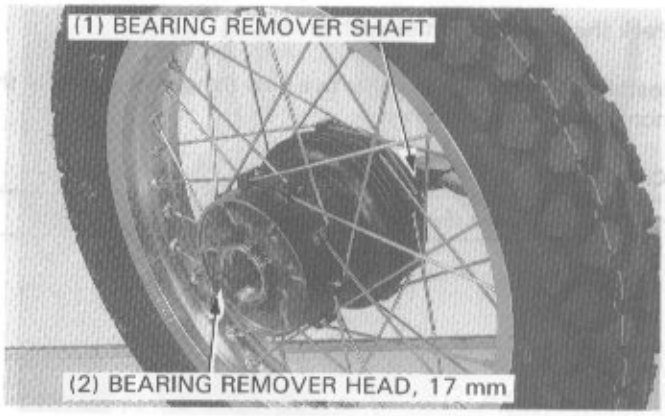

ASSEMBLY

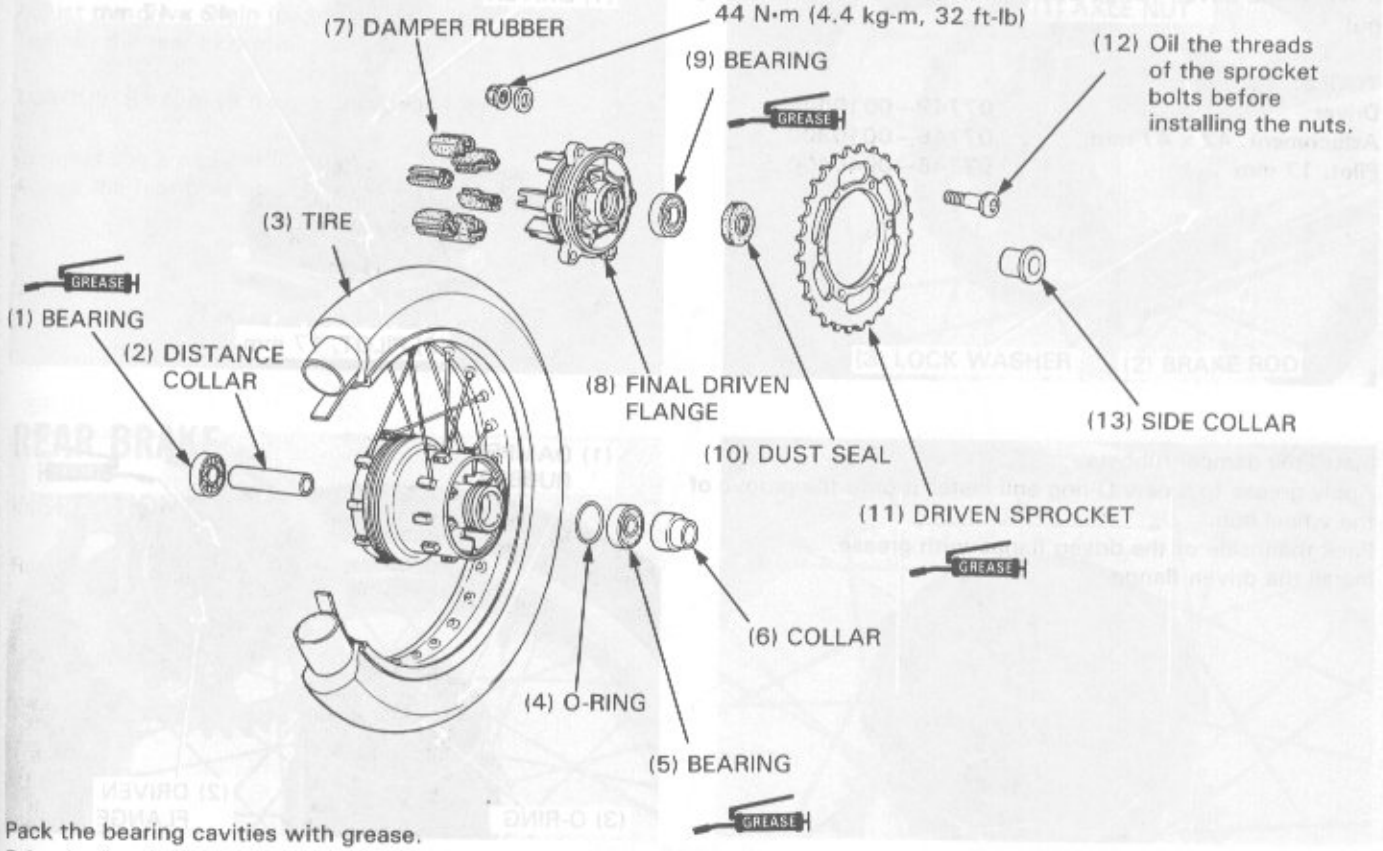

Pack the bearing cavities with grease.

Drive in the right bearing with the sealed side of the bearing facing out.

Be careful not to tilt the bearing while driving it into the hub and make sure that it is fully seated.

Install the distance collar into the hub, then drive in the left bearing with it's sealed side facing out.

⚠WARNING

- ***Grease on the brake drum reduces stopping power. Keep grease off the brake drum.***

TOOLS:

Driver	**07749–0010000**
Attachment, 37 x 40 mm	**07746–0010200**
Pilot, 17 mm	**07746–0040400**

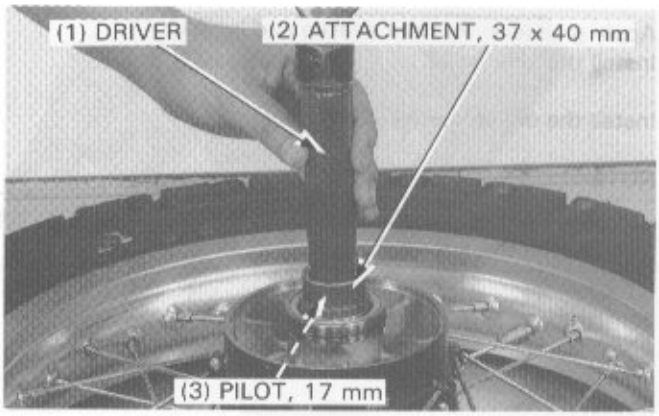

Pack the bearing cavities with grease.

Install the driven flange collar to a new flange bearing from the non-sealed side as shown.

CAUTION

- *Do not damage the bearing.*

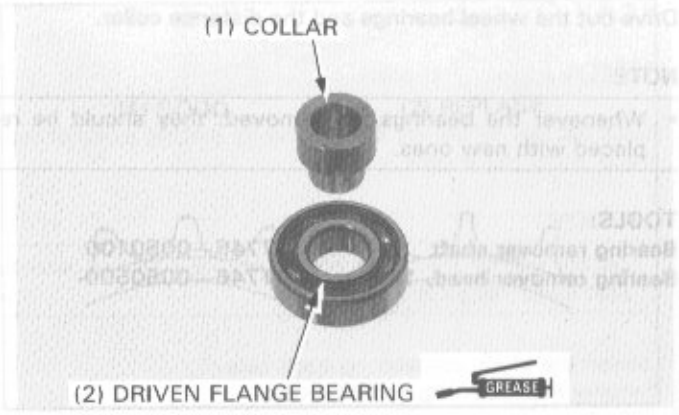

Drive in the driven flange bearing with its sealed end facing out.

TOOLS:

Driver	**07749—0010000**
Attachment, 42 x 47 mm	**07746—0010300**
Pilot, 17 mm	**07746—0040400**

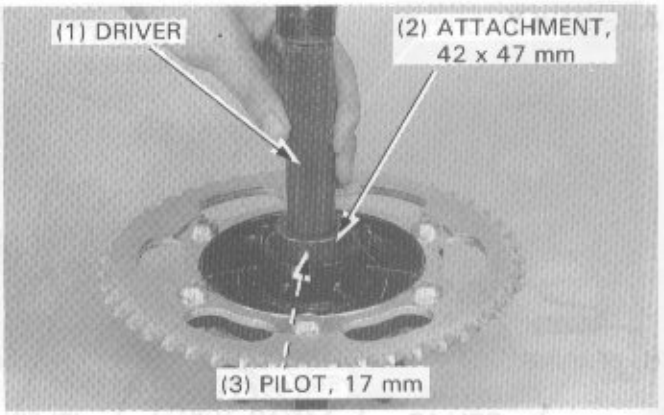

Install the damper rubbers.
Apply grease to a new O-ring and install it onto the groove of the wheel hub.
Pack the inside of the driven flange with grease.
Install the driven flange.

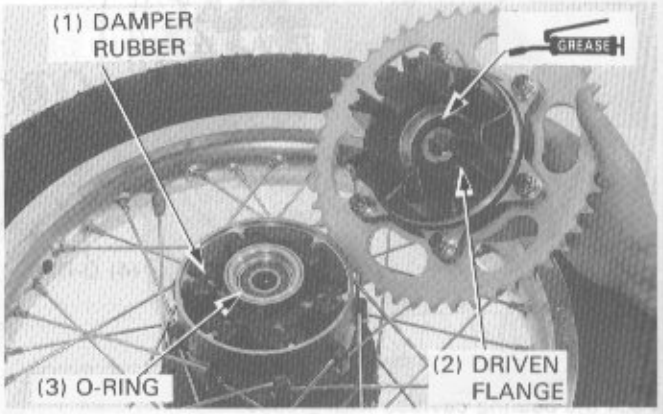

Apply grease to the dust seal lip and install it.
Install the side collar.

Install the driven sprocket if removed.

NOTE

- When tightening the driven sprocket bolts and nuts, apply oil to the threads of the bolts.

TORQUE: 44 N·m (4.4 kg-m, 32 ft-lb)

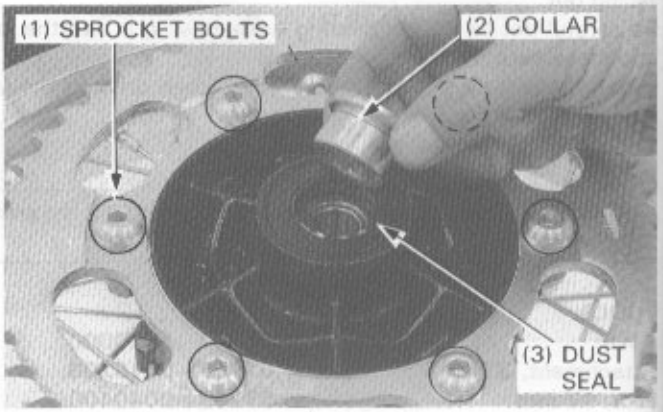

INSTALLATION

Install the brake panel to the wheel hub.
Place the rear wheel between the swingarm and rail the drive chain over the driven sprocket.

Lift the rear wheel and set the boss on the swingarm in the slot in the brake panel, then insert the rear axle from the left side through the swingarm.

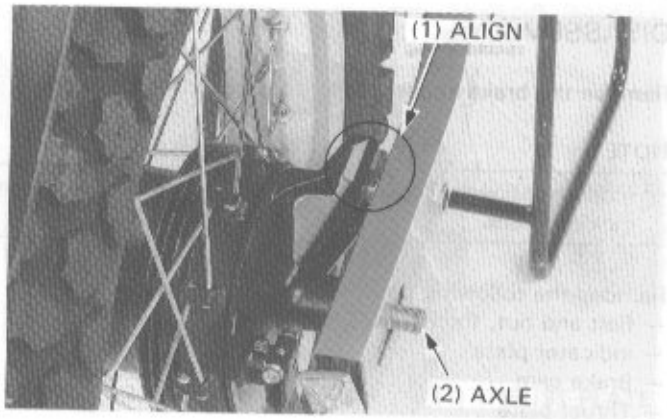

Loosely install the lock washer and axle nut.
Adjust the drive chain (page 3-11).
Tighten the rear axle nut.

TORQUE: 95 N·m (9.5 kg-m, 69 ft-lb)

Connect the brake rod to the brake arm.
Adjust the rear brake pedal free play (page 3-14).

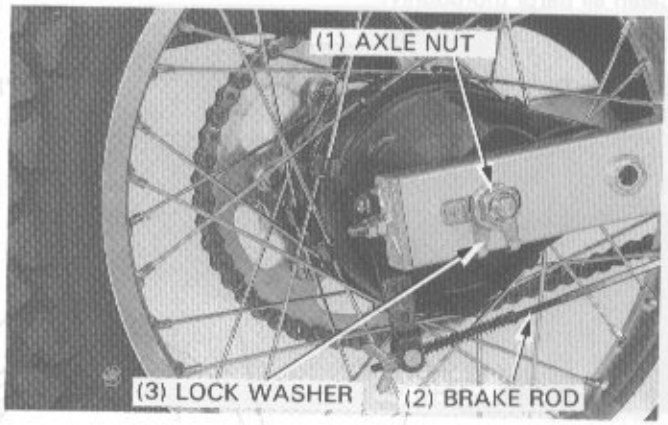

REAR BRAKE

INSPECTION

Remove the rear wheel (page 14-3).

Remove the brake panel.
Measure the rear brake drum I.D.

SERVICE LIMIT: 131 mm (5.2 in)

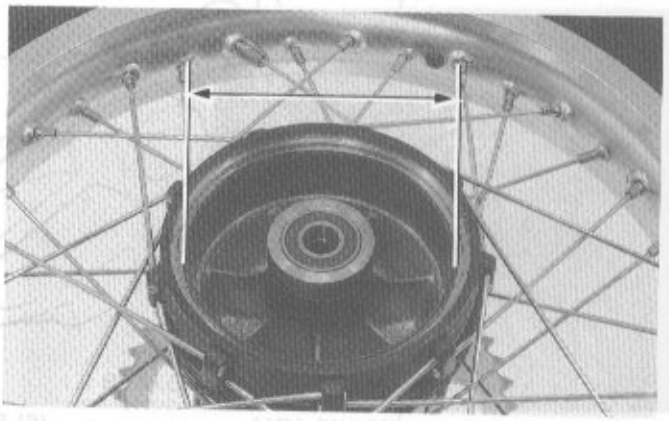

Measure the rear brake lining thickness.

SERVICE LIMIT: 2.0 mm (0.08 in)

Replace the brake shoes if they are worn beyond the service limit.

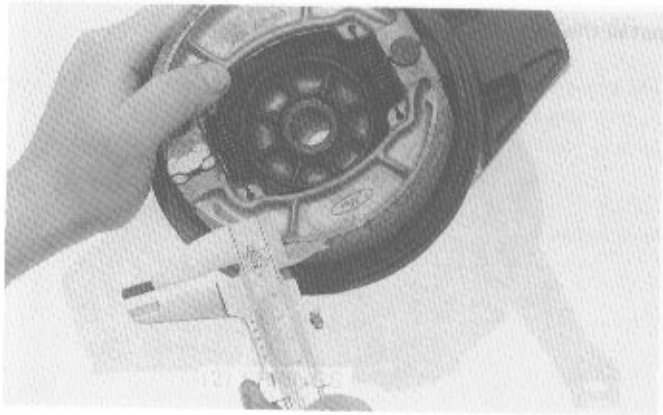

DISASSEMBLY

Remove the brake shoes and springs form the brake panel.

NOTE

- Mark the shoes to indicate their original positions before removing them.

Remove the following parts form the brake panel:
- Bolt and nut, then brake arm
- Indicator plate
- Brake cam
- Thrust plate
- Dust seals

Clean all parts thoroughly.

ASSEMBLY

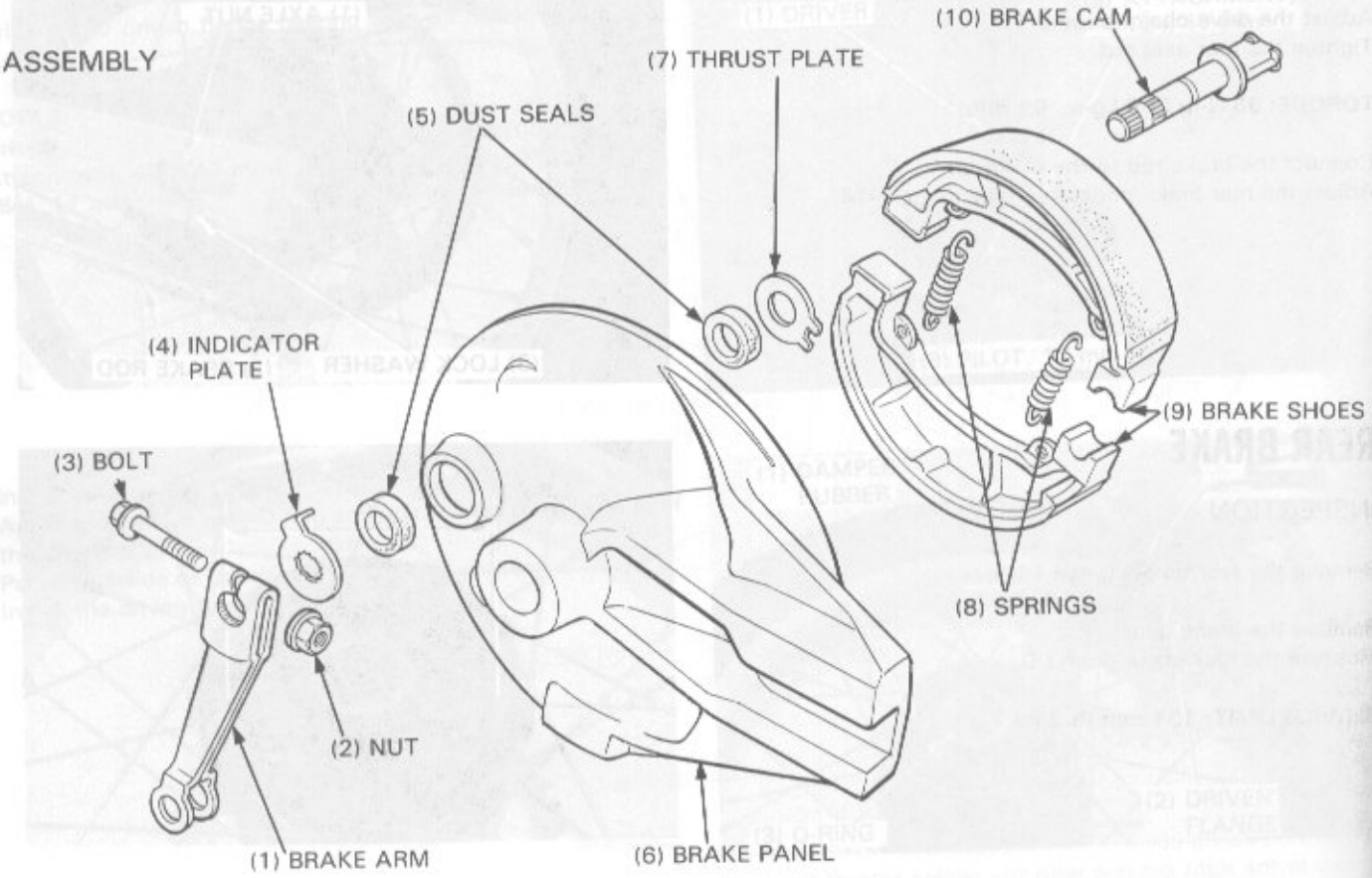

Install the dust seals into the brake panel.

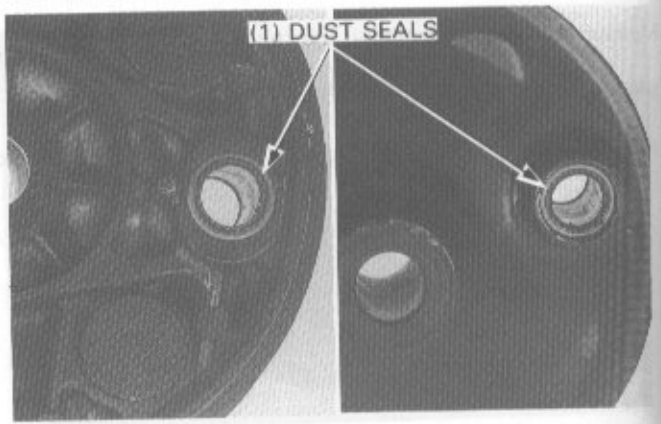

Apply grease to the thrust plate and install it by aligning the groove with the pin on the brake panel.
Apply grease to the brake cam and install it.
Apply grease to the brake anchor pin.

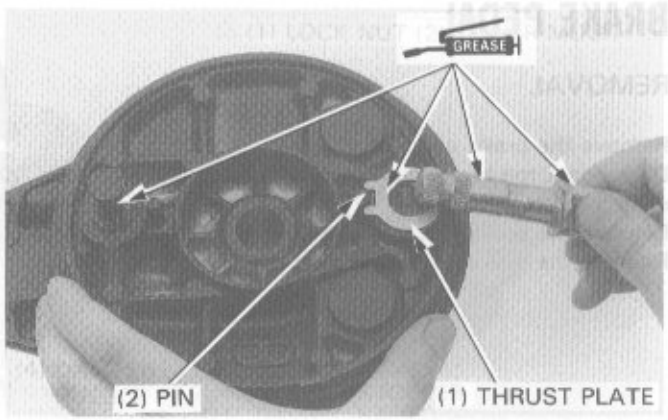

Install the indicator plate onto the brake cam, aligning its tab with cut-out on the brake cam.

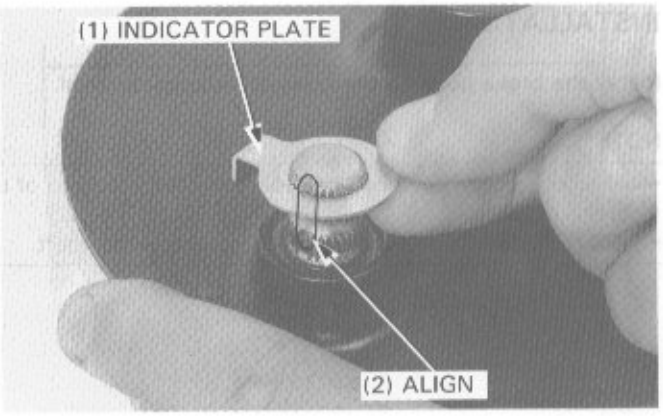

Install the brake arm by aligning the punch marks.
Install the bolt and tighten the nut securely.

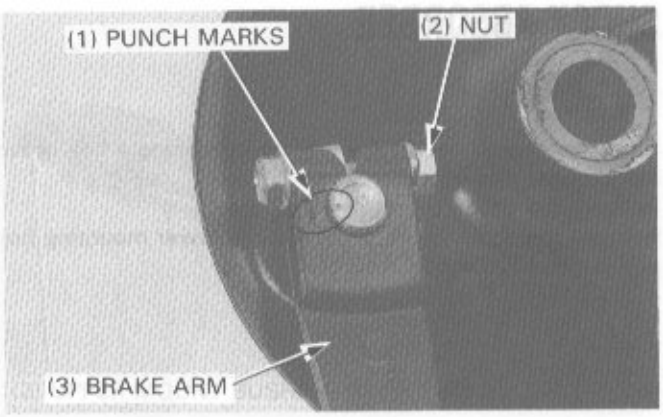

Position the brake shoes in their original locations and install the springs.

⚠WARNING

- ***Grease on the brake linings will reduce stopping power. Keep grease off of the brake linings. Wipe excess grease off the cam and anchor pin.***

Install the brake panel into the wheel hub and install the rear wheel (page 14-7).

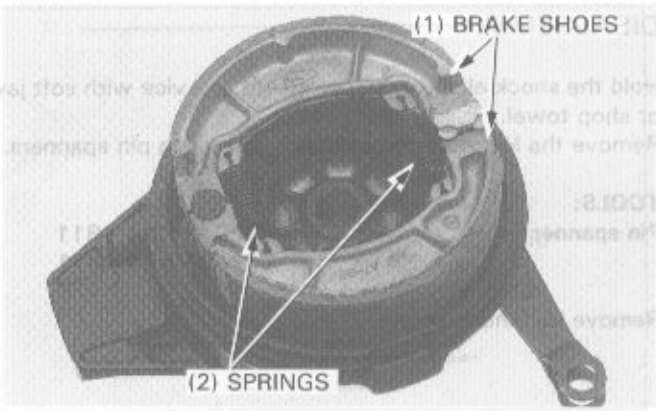

BRAKE PEDAL

REMOVAL

Remove the brake adjuster.
Disconnect the brake pedal return spring and rear brake light switch return spring.
Remove the brake pedal mounting bolt and nut.
Remove the brake pedal and dust seals.

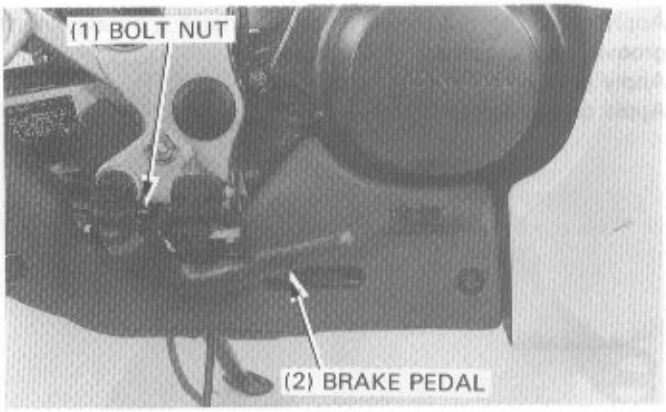

INSTALLATION

Install the brake pedal in the reverse order of removal.

NOTE

- Align the punch mark on the pedal shaft with the slot of the brake rod arm.
- Apply grease to the dust seals and brake pedal shaft.

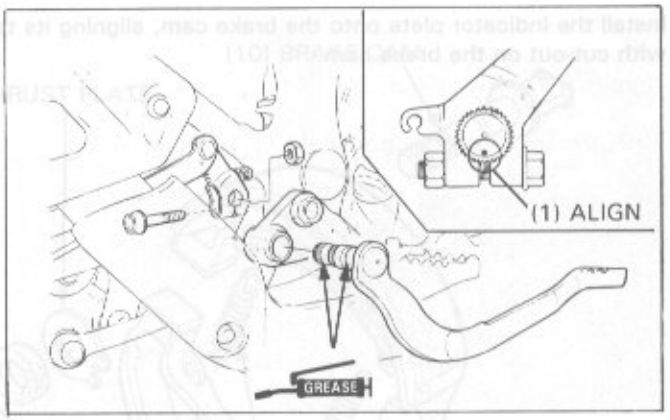

SHOCK ABSORBER

REMOVAL

Raise the rear wheel off the ground by placing a box or work stand under the engine.
Remove the shock link-to-shock arm bolt.
Remove the shock absorber upper and lower mounting bolts, and remove the shock absorber.

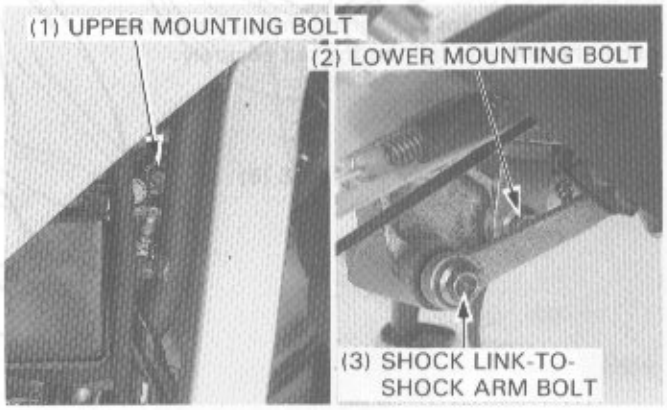

DISASSEMBLY

Hold the shock absorber upper mount in a vice with soft jaws or shop towel.
Remove the lock nut and adjusting nut using pin spanners.

TOOLS:
Pin spanner **89201–KA4–811**
89202–KA4–811

Remove the shock spring.

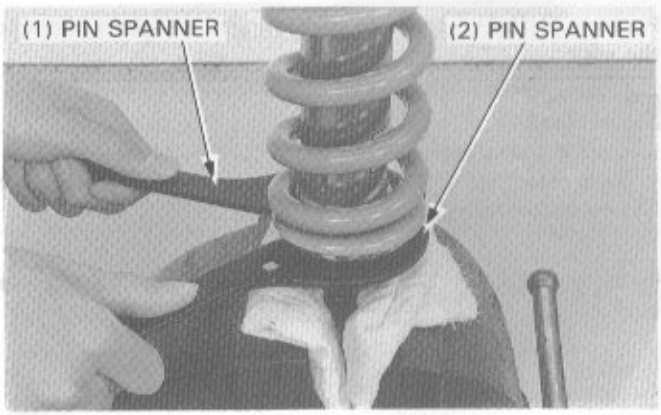

Loosen the lock nut.
Remove the lower mount, seat stopper, spring guide, spring seat and damper rubber.

Clean the locking agent off the damper rod and lower mount lock nut threads.

⚠WARNING

- ***The damper unit is filled with nitrogen gas under high pressure, do not try to disassemble.***

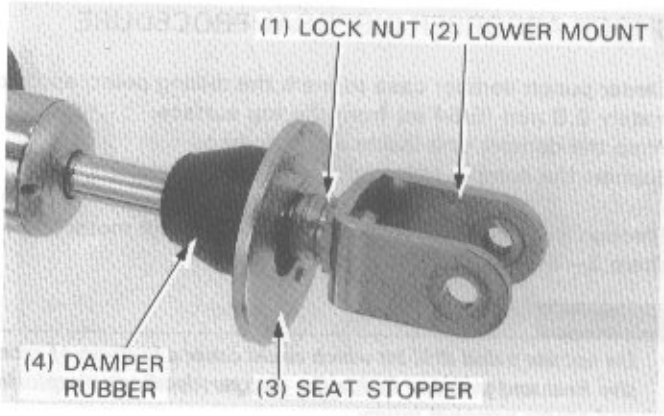

INSPECTION

Measure the spring free length.

SERVICE LIMIT: 263 mm (10.35 in)

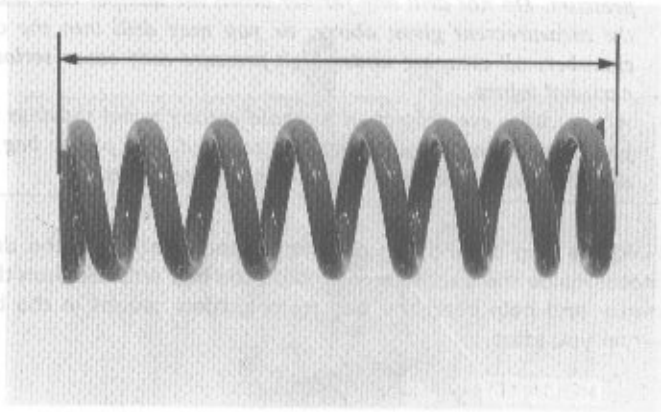

⚠WARNING

- ***The damper unit is filled with nitrogen gas under high pressure, do not try to disassemble.***

Check the damper unit for oil leaks or other damage and the damper rod for trueness.

Check the spring seat, and spring guide, damper rubber and spring seat stopper for wear or damage.

Check the upper mount bushing for wear or damage.

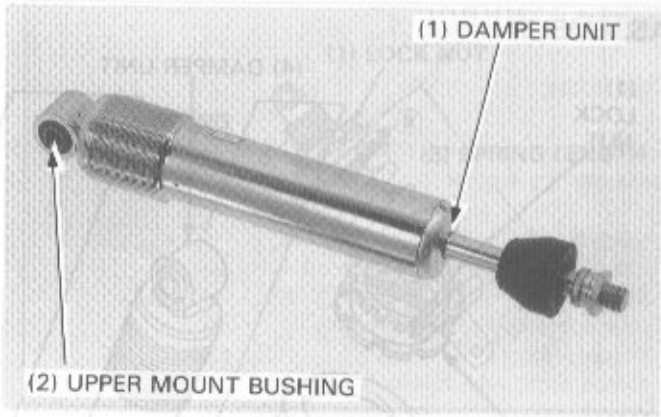

Mark the 10 mm position as shown of the damper rod.
Place the damper rod on a scale and measure the force required to compress the damper until 10 mm (0.4 in).

COMPRESSION FORCE: 33 kg (72.75 lb)

If the force required is less than 23.5 kg (51.81 lb), gas is leaking.
Examine the damper rod and replace the damper unit if it is bent or scored.

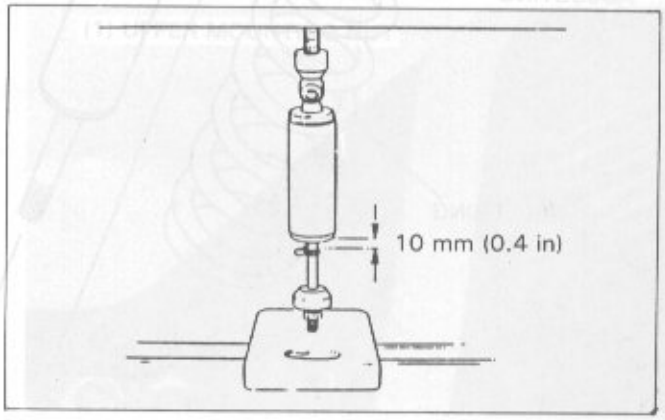

SHOCK ABSORBER DISPOSAL PROCEDURE

Center punch damper case to mark the drilling point, approximately 2.0 mm (5/64 in) from the top surface.
Wrap the damper unit inside a plastic bag.
Support the damper unit upright in a vise as shown.

Through the open end of the bag, insert a drill motor with a sharp 2—3 mm (5/64—1/8 in) drill bit.

⚠ WARNING

- ***Do not use a dull drill bit which could cause a built-up of excessive heat and pressure inside the damper, leading to explosion and severe personal injury.***
- ***The shock absorber contains nitrogen gas and oil under high pressure. Do not drill any farther down the damper case than the measurement given above, or you may drill into the oil chamber; oil escaping under high pressure may cause serious personal injury.***
- ***Always wear eye protection to avoid getting metal shavings in your eyes when the gas pressure is released. The plastic bag is only intended to shield you from the escaping gas.***

Hold the bag around the drill motor and briefly run the drill motor inside the bag; this will inflate the bag with air from the motor and help keep the bag from getting caught in the bit when you start.

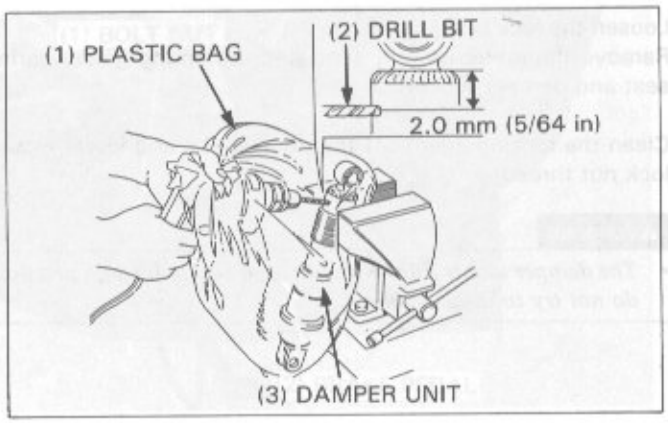

ASSEMBLY

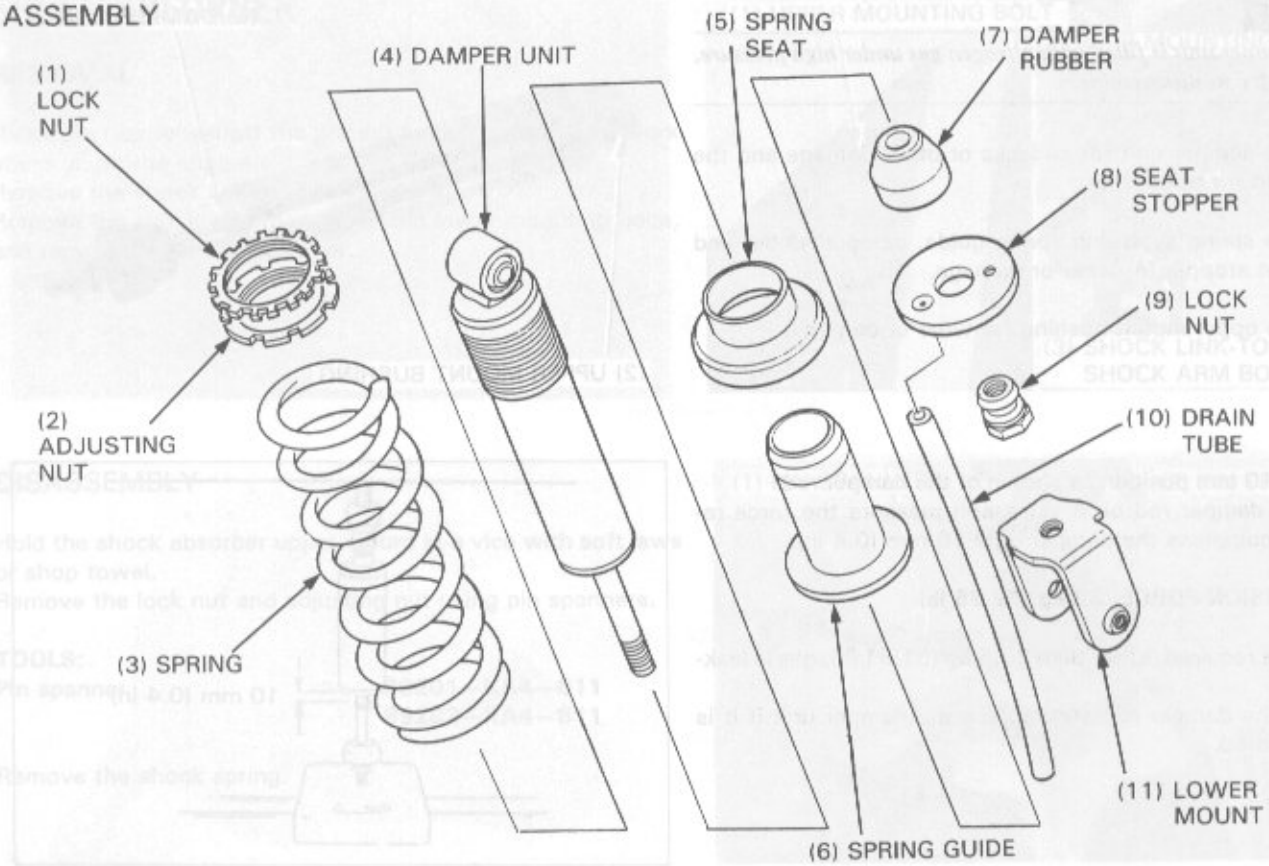

Install the spring seat, damper rubber spring guide and spring seat stopper.

Apply a locking agent to the rod threads and install the lock nut. Screw the lock nut on fully.
Screw the lower mount onto the damper rod fully, hold it and tighten the lock nut.

TORQUE: 68 N·m (6.8 kg-m, 49 ft-lb)

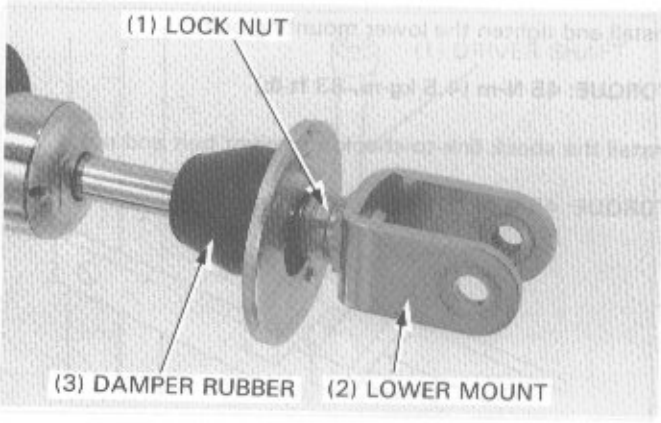

Align the lower mount cut-out with the locating pin on the spring seat stopper as shown.
Install the spring.

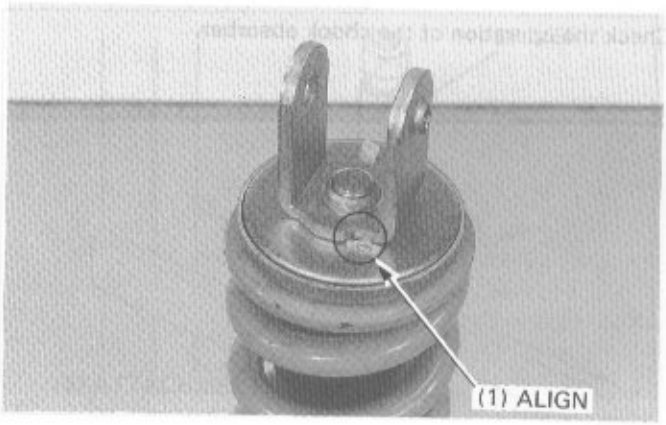

Install the spring adjusting nut and lock nut.
Turn the spring adjusting nut until the spring length is as specified.

A: DECREASE THE SPRING LENGTH
B: INCREASE THE SPRING LENGTH

STANDARD SPRING LENGTH: 264.9 mm (10.43 in)
MAXIMUM LENGTH: 267.5 mm (10.53 in)
MINIMUM LENGTH: 258.0 mm (10.16 in)

NOTE

- One turn of the adjusting nut changes the spring length by 1.5 mm.

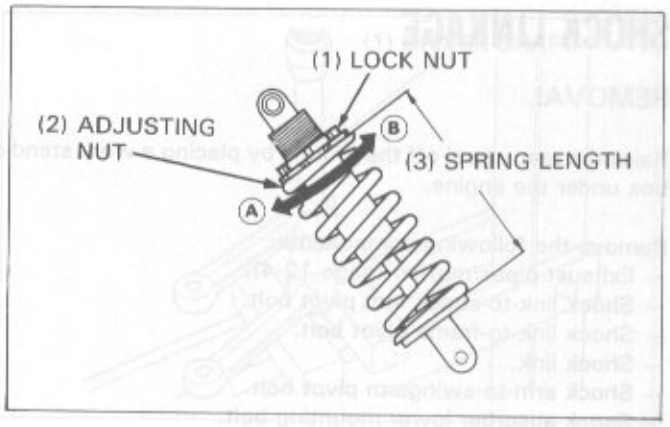

Tighten the lock nut.

TORQUE: 90 N·m (9.0 kg-m, 65 ft-lb)

Install the breather tube.

INSTALLATION

Install the shock absorber with the drain tube torward the front.

Install and tighten the upper mounting bolt and nut.

TORQUE: 45 N·m (4.5 kg-m, 33 ft-lb)

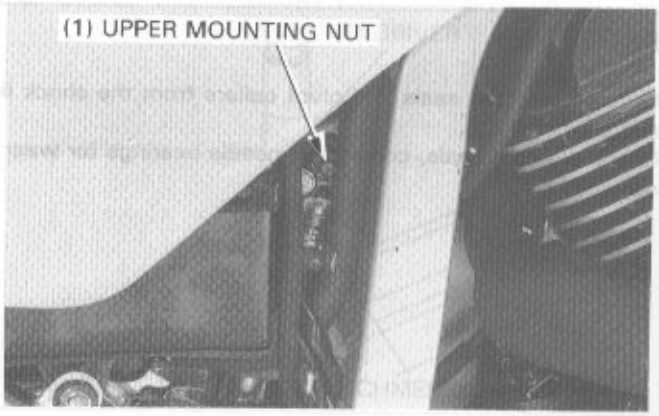

Install and tighten the lower mounting bolt.

TORQUE: 45 N·m (4.5 kg-m, 33 ft-lb)

Install the shock link-to-shock arm pivot bolt and nut.

TORQUE: 45 N·m (4.5 kg-m, 33 ft-lb)

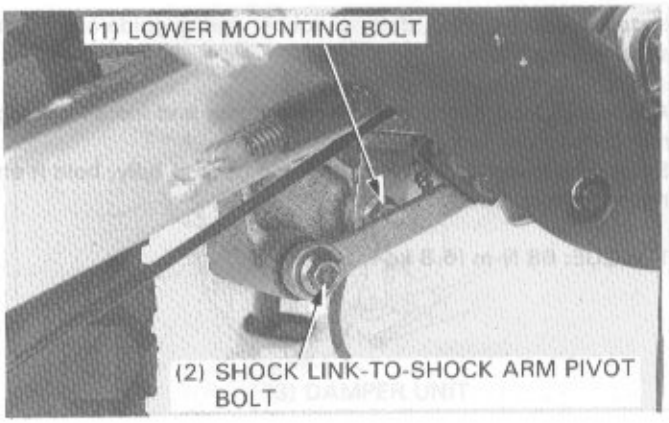

Check the operation of the shock absorber.

SHOCK LINKAGE

REMOVAL

Raise the rear wheel off the ground by placing a work stand or box under the engine.

Remove the following components:
- Exhaust pipes/muffler (page 12-4).
- Shock link-to-shock arm pivot bolt.
- Shock link-to-frame pivot bolt.
- Shock link.
- Shock arm-to-swingarm pivot bolt.
- Shock absorber lower mounting bolt.
- Shock arm.

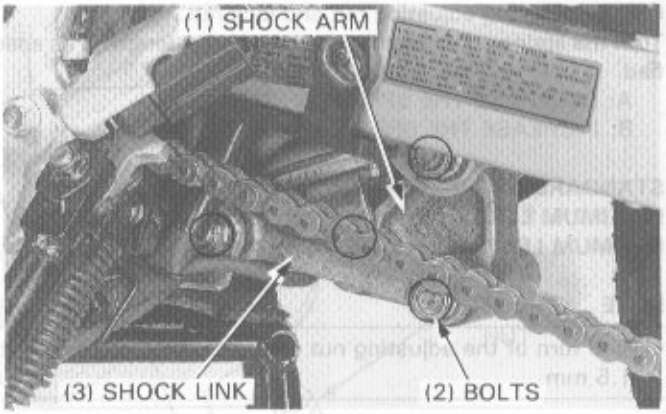

INSPECTION

Remove the dust seals and pivot collars from the shock link and shock arm.
Check the dust seals, collars and needle bearings for wear or damage.

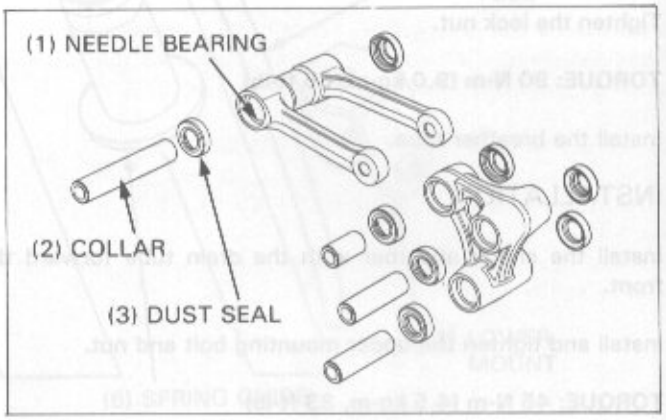

PIVOT BEARING REPLACEMENT

Shock arm

Press the needle bearings out of the shock arm.

TOOL:

Driver shaft	**07946—MJ00100**

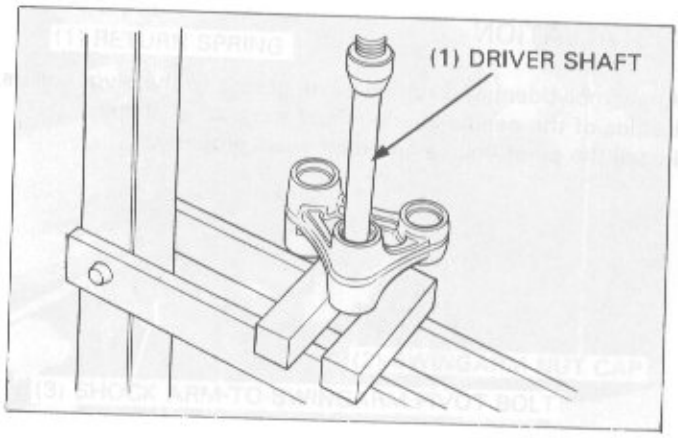

Press a new needle bearing into the shock arm with the markings facing out.

TOOLS:

Driver	**07749—0010000**
Attachment, 24 x 26 mm	**07746—0010700**

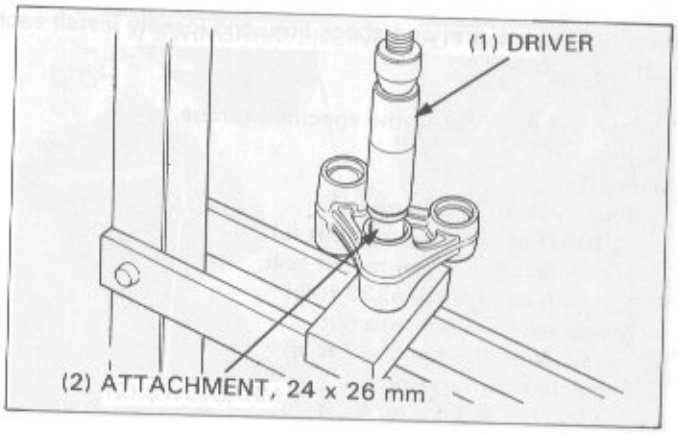

Shock link

Press the needle bearings out of the shock link.

TOOL:

Driver shaft	**07946—MJ00100**

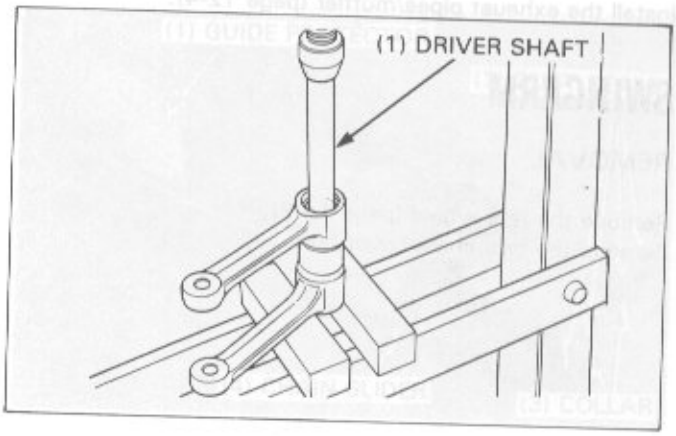

Press a new needle bearing into the shock link with the markings facing out.

TOOLS:

Driver	**07749—0010000**
Attachment, 24 x 26 mm	**07746—0010700**

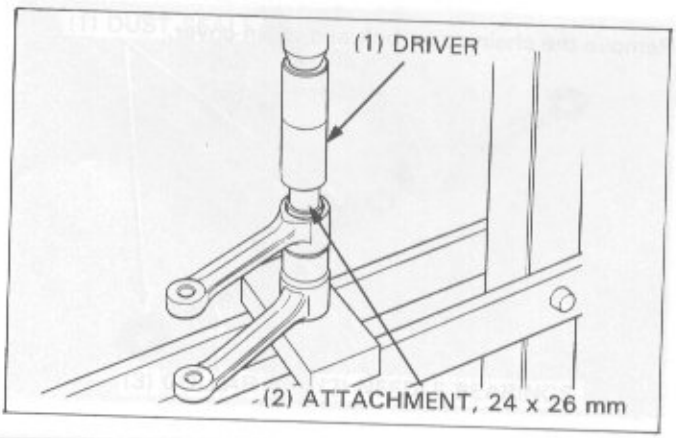

INSTALLATION

Apply molybdenum disulfide paste grease to the pivot collars, insides of the needle bearings and the dust seal lips.
Install the pivot collars and dust seals properly.

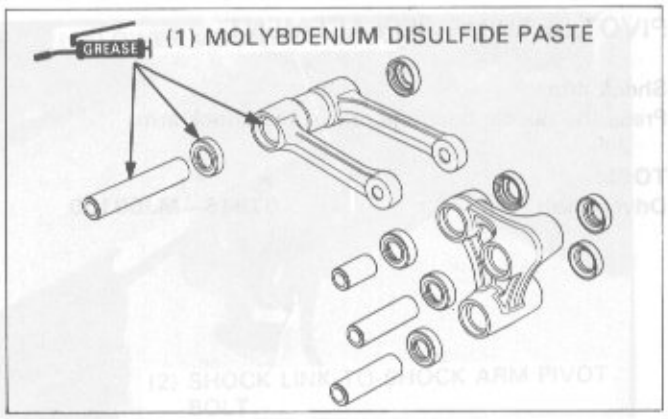

Install the shock arm and shock link, and loosely install each bolt and nut.

Tighten the each nut to the specified torque.

TORQUE:
Shock arm-to-swingarm nut:
105 N·m (10.5 kg-m, 76 ft-lb)
Shock absorber lower mount bolt:
45 N·m (4.5 kg-m, 33 ft-lb)
Shock link-to-shock arm nut:
65 N·m (6.5 kg-m, 47 ft-lb)
Shock link-to-frame nut:
65 N·m (6.5 kg-m, 47 ft-lb)

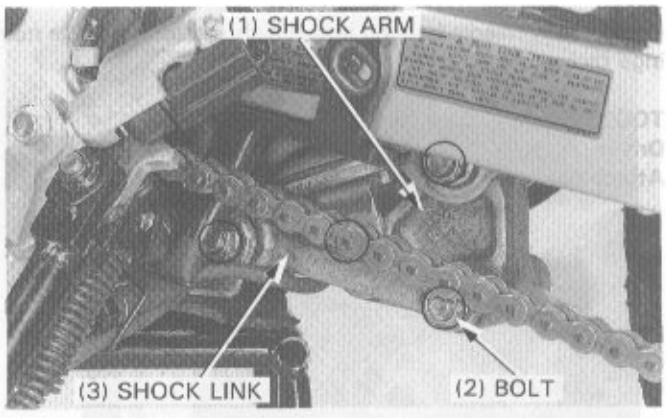

Install the exhaust pipes/muffler (page 12-4).

SWINGARM

REMOVAL

Remove the rear wheel (page 14-3).
Remove the two chain cover bolts.

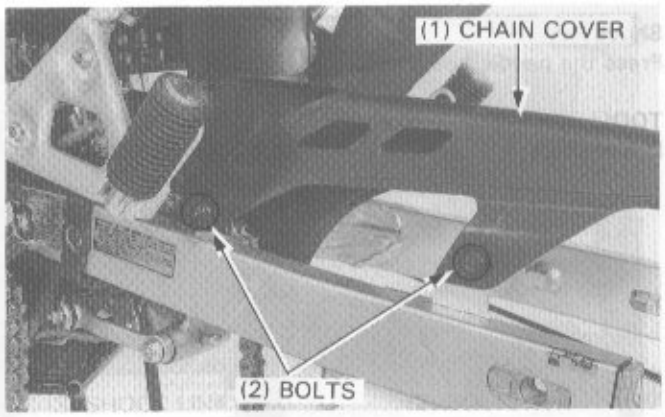

Remove the chain cover bolt and chain cover.

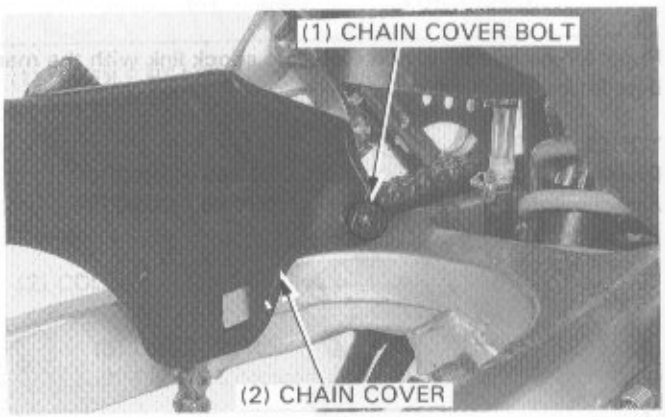

Remove the brake pedal return spring.
Remove the shock arm-to-swingarm pivot bolt.
Remove the swing arm nut cap.

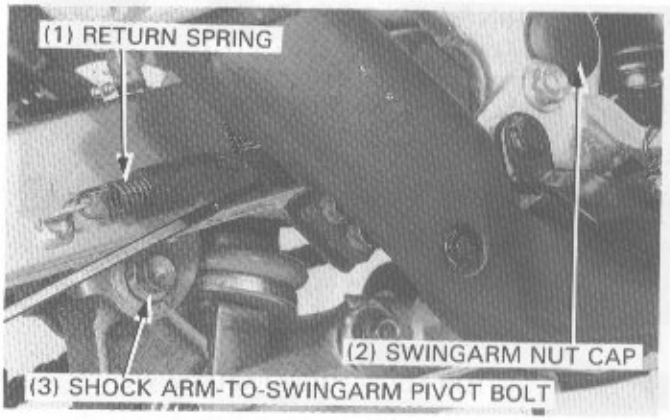

Remove the swingarm/engine pivot bolt and swingarm.

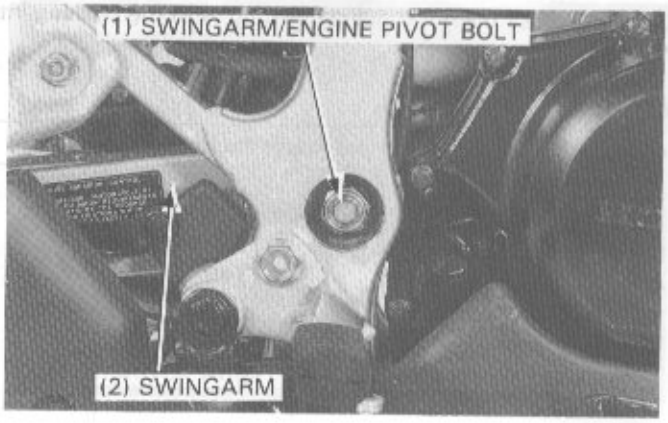

DISASSEMBLY

Remove the chain slider and chain guide protector.
Remove the dust seals and pivot collars.

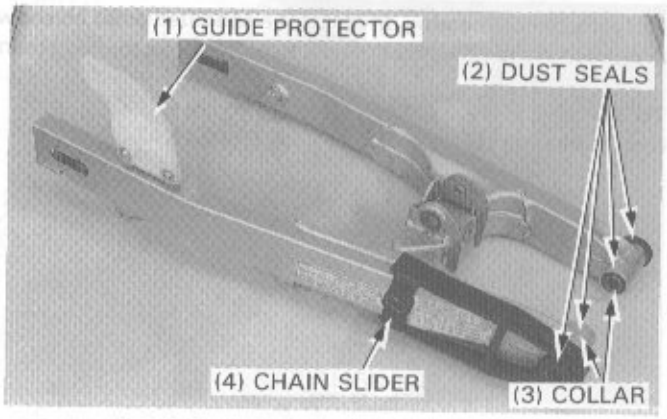

INSPECTION

Inspect the swingarm for deformation or cracks.
Check the needle bearings, collars and dust seals for wear or damage.

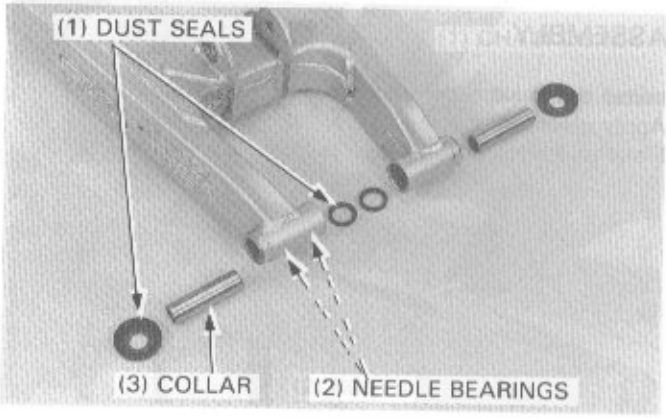

PIVOT BEARING REPLACEMENT

Drive the bushing out of the swingarm.
Press the needle bearing out with the special tool.

TOOL:
Needle bearing driver **07946—KA50000**

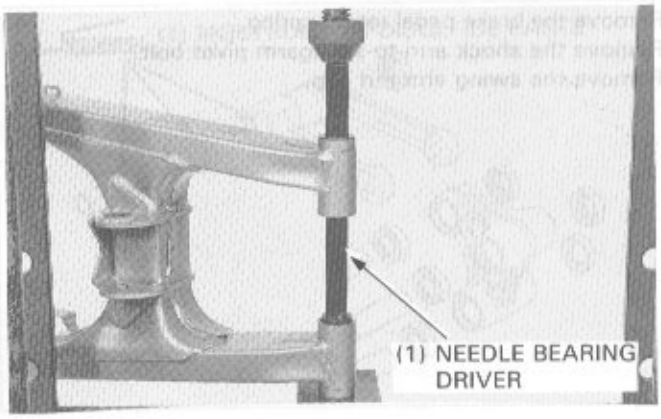

Carefully press the outer needle bearing with the bushing into the swingarm pivot.

NOTE

- Install the bearing with the marks facing out.

TOOLS:
Driver **07749—0010000**
Attachment, 32 x 35 mm **07746—0010100**

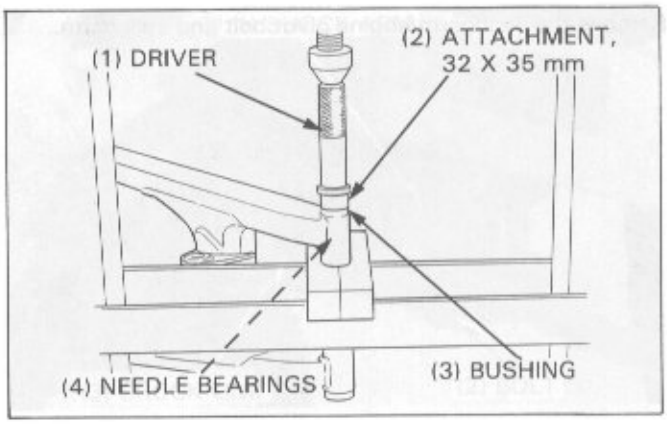

Mark the needle bearing driver on the specified point as shown and press in the new inner needle bearing to the marking point.

TOOL:
Needle bearing driver **07946—KA50000**

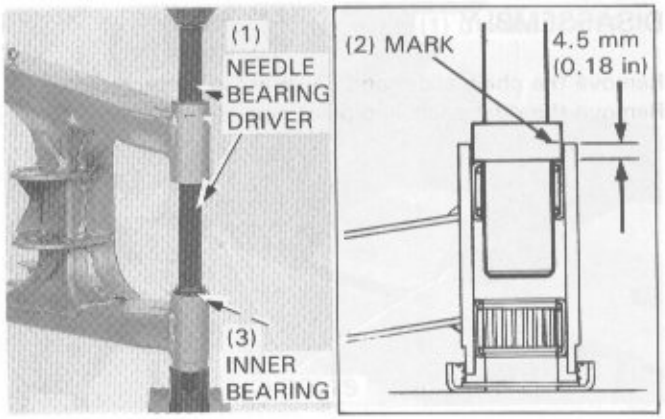

ASSEMBLY

Install the chain slider and chain guide protector.
Apply grease to the dust seal lips.
Install the pivot collars, then dust seals.

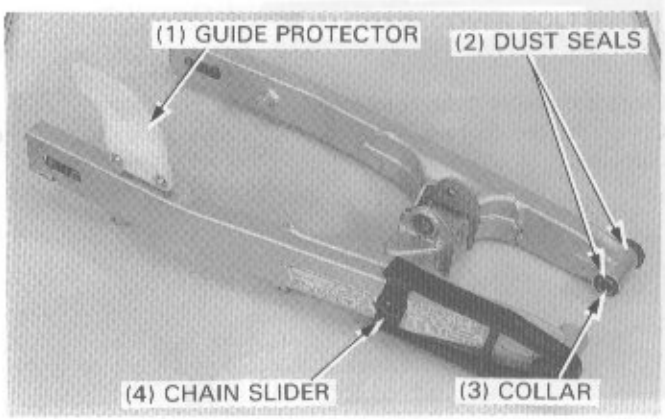

INSTALLATION

Install the swingarm to the frame.

Install the swingarm/engine pivot bolt and nut, and tighten the nut to the specified torque.

TORQUE: 110 N·m (11.0 kg-m, 80 ft-lb)

Install the swingarm nut cap securely.

Install the brake pedal return spring.
Install the shock arm-to-swingarm pivot bolt and nut, and tighten the nut.

TORQUE: 105 N·m (10.5 kg-m, 76 ft-lb)

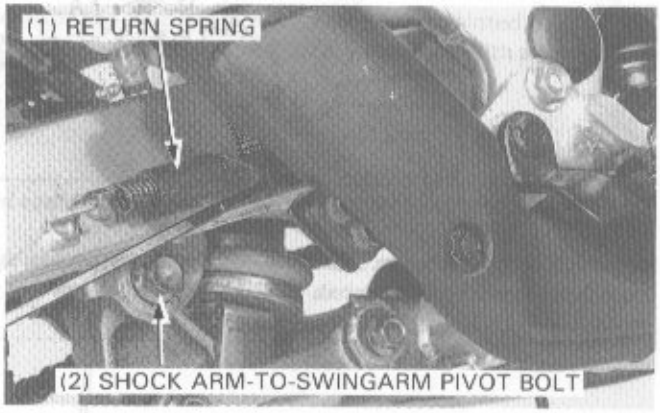

Install the chain cover onto the swingarm aligning the bosses of the swingarm with the grooves of the chain cover.
Install the chain cover bolt.

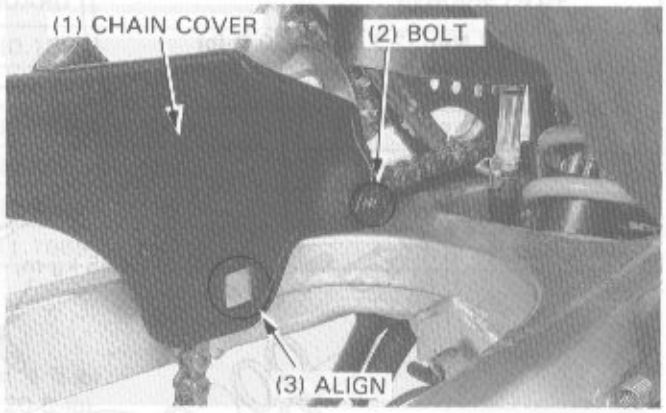

Install the two chain cover bolts.
Install the rear wheel (page 14-7).

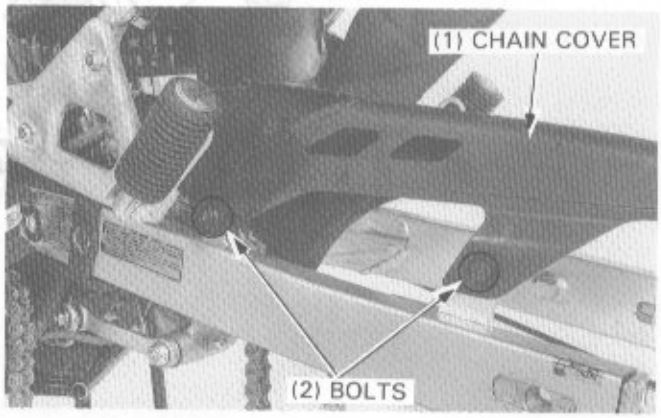

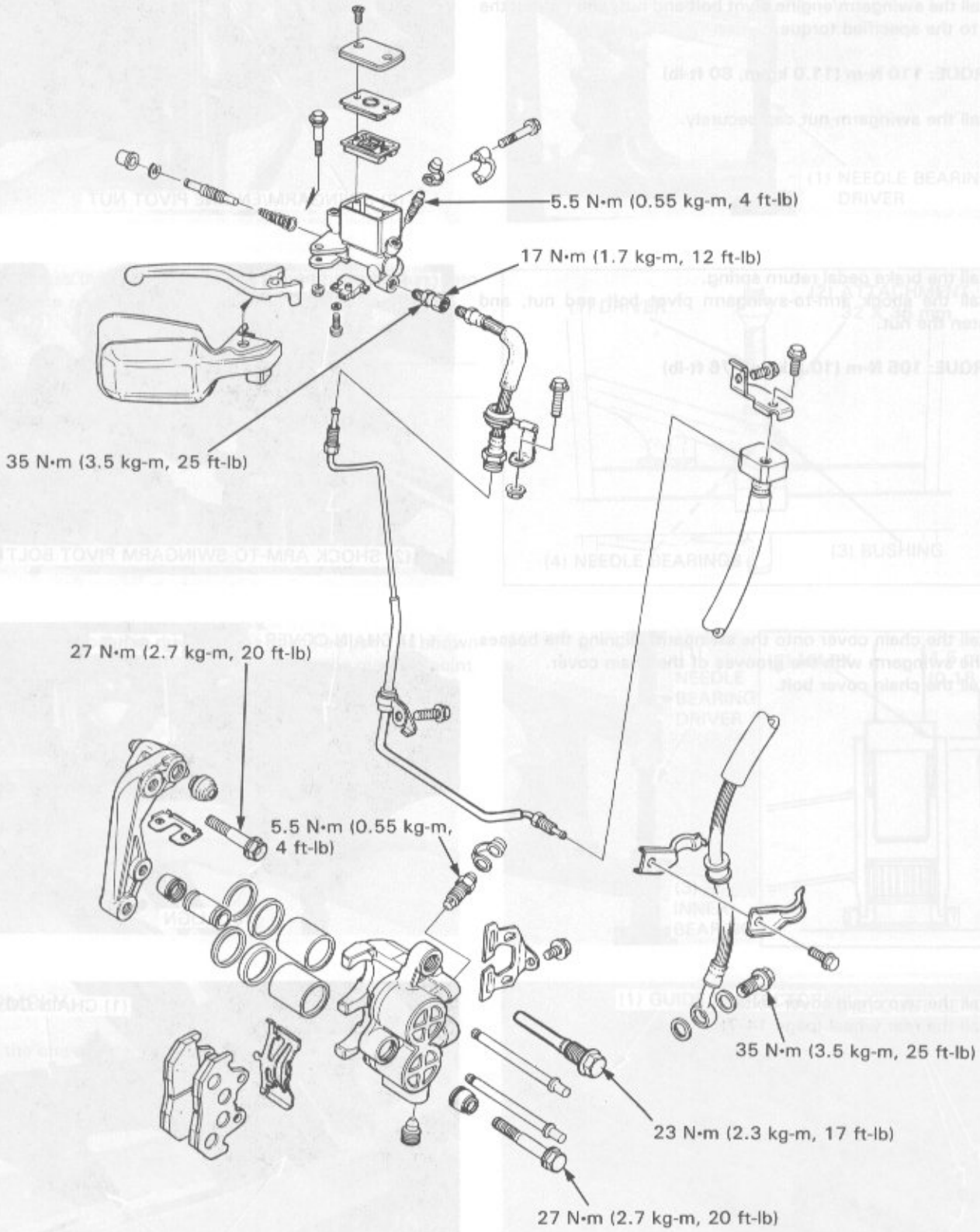
5.5 N·m (0.55 kg-m, 4 ft-lb)
17 N·m (1.7 kg-m, 12 ft-lb)
35 N·m (3.5 kg-m, 25 ft-lb)
27 N·m (2.7 kg-m, 20 ft-lb)
5.5 N·m (0.55 kg-m, 4 ft-lb)
35 N·m (3.5 kg-m, 25 ft-lb)
23 N·m (2.3 kg-m, 17 ft-lb)
27 N·m (2.7 kg-m, 20 ft-lb)

SERVICE INFORMATION	15-1	BRAKE PAD/DISC	15-4
TROUBLESHOOTING	15-2	MASTER CYLINDER	15-7
BRAKE FLUID REPLACEMENT/ AIR BLEEDING	15-3	BRAKE CALIPER	15-9

SERVICE INFORMATION

GENERAL

- Use DOT 3 or 4 brake fluid.
- If the hydraulic system has been opened, or if the brakes feel spongy, the system must be bled.
- Do not allow foreign material to enter the system when filling the reservoir.
- Brake fluid will damage painted, plastic, and rubber parts. Whenever handling brake fluid, protect the painted, plastic and rubber parts by covering them with a shop towel. If fluid does get on these parts, wipe it off immediately with a clean shop towel.
- Always check brake operation before riding the motorcycle.

⚠ WARNING

- ***A contaminated brake disc or pad reduces stopping power. Discard contaminated pads and clean a contaminated disc with a high quality brake degreasing agent.***
- ***Inhaled asbestos fibers have been found to cause respiratory disease and cancer. Never use an air hose or dry brush to clean brake assemblies. Use an OSHA-approved vacuum cleaner or alternate method approved by OSHA designed to minimize the hazard caused by airborne asbestos fibers.***

SPECIFICATIONS

mm (in)

ITEM	STANDARD	SERVICE LIMIT
Disc thickness	4.5 (0.18)	3.5 (0.14)
Disc runout	—	0.30 (0.012)
Master cylinder I.D.	12.700–12.743 (0.5000–0.5017)	12.76 (0.502)
Master piston O.D.	12.657–12.684 (0.4983–0.4994)	12.65 (0.498)
Caliper cylinder I.D.	30.230–30.280 (1.1902–1.1921)	30.29 (1.193)
Caliper piston O.D.	30.148–30.280 (1.1869–1.1921)	30.14 (1.187)

TORQUE

Bleed valve	5.5 N·m (0.55 kg-m, 4 ft-lb)
Caliper bolt	27 N·m (2.7 kg-m, 20 ft-lb)
Brake hose joint	35 N·m (3.5 kg-m, 25 ft-lb)
Brake hose joint nut	17 N·m (1.7 kg-m, 12 ft-lb)
Caliper bracket bolt	27 N·m (2.7 kg-m, 20 ft-lb)
Brake hose bolt	35 N·m (3.5 kg-m, 25 ft-lb)
Caliper pivot bolt	23 N·m (2.3 kg-m, 17 ft-lb)

TOOL

Special	
Snap ring pliers	07914–3230001

TROUBLESHOOTING

Brake lever soft or spongy
- Air bubbles in hydraulic system.
- Low fluid level.
- Hydraulic system leaking.
- Faulty dust seal or piston seal.

Brake lever too hard
- Sticking piston(s).
- Clogged hydraulic system.
- Pads glazed or worn excessively.

Brake drag
- Hydraulic system sticking.
- Sticking piston(s).

Brake grab or pull to one side
- Pads contaminated.
- Disc or wheel misaligned

Brake chatter or squeal
- Pads contaminated.
- Excessive disc runout.
- Caliper installed incorrectly.
- Disc or wheel misaligned.

BRAKE FLUID REPLACEMENT/AIR BLEEDING

CAUTION

- *Be careful not to enter dust or water into the brake system when filling the reservoir.*
- *Do not mix different types of fluid since they are not compatible.*
- *Avoid spilling fluid on painted surfaces. Place a rag over the fuel tank whenever the system is serviced.*

Check the fluid level with the fluid reservoir level to the ground.
Remove the reservoir cap and diaphragm.

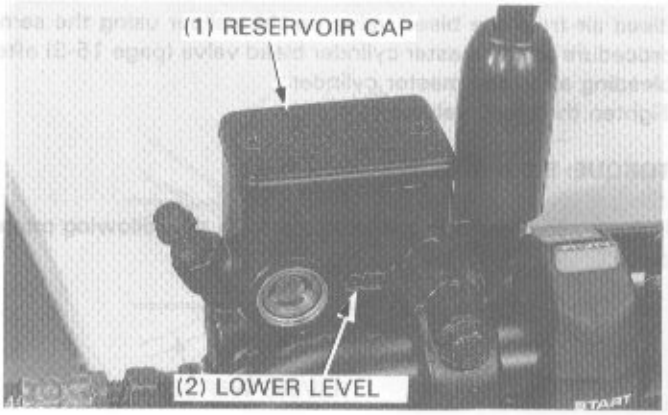

BRAKE FLUID DRAINING

Connect a bleed hose to the bleed valve.

Loosen the caliper bleed valve and pump the brake lever. Stop operating the lever when fluid stops flowing out of the bleed valve.

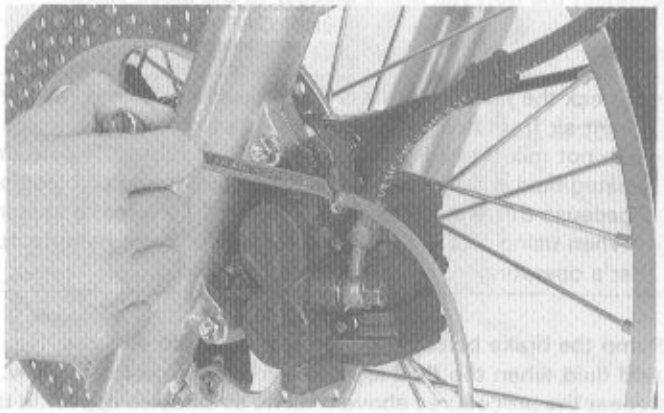

⚠WARNING

- ***A contaminated brake disc or pad reduces stopping power. Discard contaminated pads and clean a contaminated disc with a high quality brake degreasing agent.***

BRAKE FLUID FILLING/AIR BLEEDING

CAUTION

- *Do not mix different types of fluid since they are not compatible.*

Close the bleed valve, fill the master cylinder with Dot 3 or 4 brake fluid to the casting ledge level.
Bleed air from the bleed valve on the master cylinder using the following procedure before bleeding air at the caliper.
Install the diaphragm.
Pump up the system pressure with the lever until there are no air bubbles in the fluid flowing out of the reservoir small hole and lever resistance is felt.

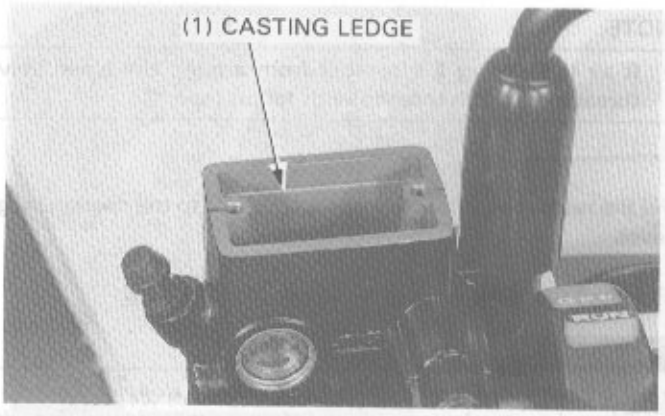

1) Squeeze the brake lever, then open the bleed valve 1/2 turns and close the valve.

NOTE

- Do not release the brake lever until the bleed valve has been closed.

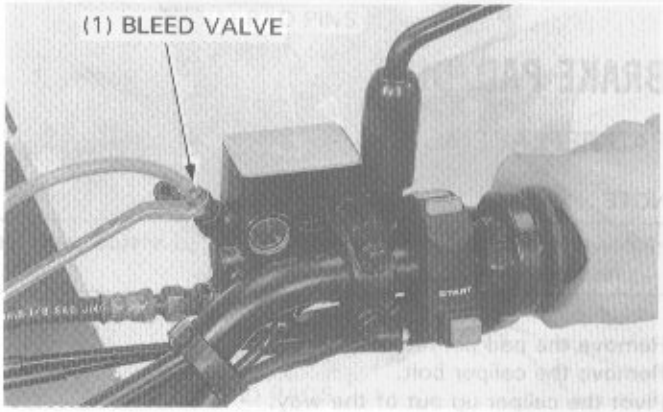

2) Release the brake lever slowly and wait several seconds after it reaches the end of its travel.

Repeat steps 1 and 2 until bubbles cease to appear in the fluid at the end of the hose.
Tighten the bleed valve.

TORQUE: 5.5 N·m (0.55 kg-m, 4 ft-lb)

Bleed air from the bleed valve on the caliper using the same procedure as the master cylinder bleed valve (page 15-3) after bleeding air at the master cylinder.
Tighten the bleed valve.

TORQUE: 5.5 N·m (0.55 kg-m, 4 ft-lb)

If the brake bleeder is available, perform the following procedure.

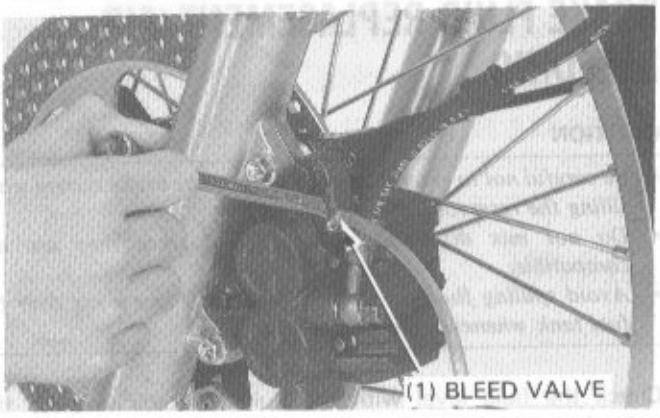

Connect the Mityvac Brake Bleeder to the bleed valve.

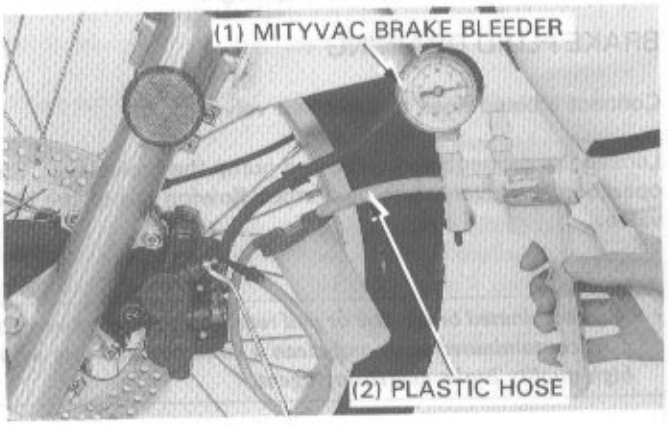

NOTE

- Check the fluid level often while bleeding the brakes to prevent air from being pumped into the system.
- Do not mix brake fluid types and never reuse the contaminated fluid which has been pumped out during air bleeding, because this will impair the efficiency of the brake system.
- When using a brake bleeding tool, follow the manufacturer's operating instructions.

Pump the brake bleeder and loosen the bleed valve.
Add fluid when the fluid level in the master cylinder is low.
Repeat the procedures above until no air bubbles appear in the plastic hose.

NOTE

- If air is entering the bleeder from around the bleed valve threads, seal the threads with teflon tape.

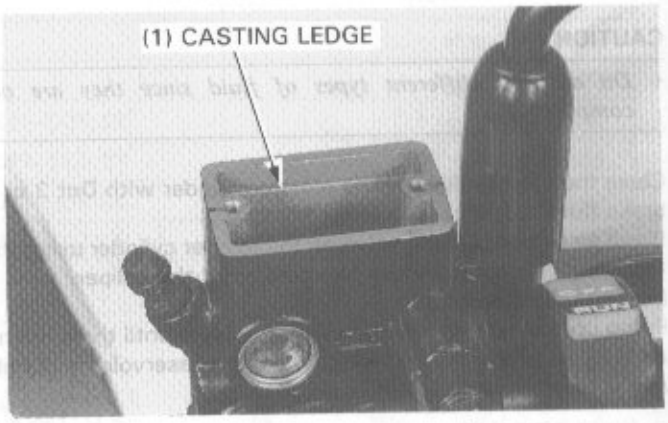

Fill the reservoir with Dot 3 or 4 brake fluid to the casting ledge level.

Reinstall the diaphragm and master cylinder cap.

⚠WARNING

- ***A contaminated brake disc or pad reduces stopping power. Discard contaminated pads and clean a contaminated disc with a high quality brake degreasing agent.***

BRAKE PAD/DISC

PAD REPLACEMENT

NOTE

- Always replace the brake pads in pairs to assure even disc pressure.

Remove the pad pin retainer.
Remove the caliper bolt.
Pivot the caliper up out of the way.

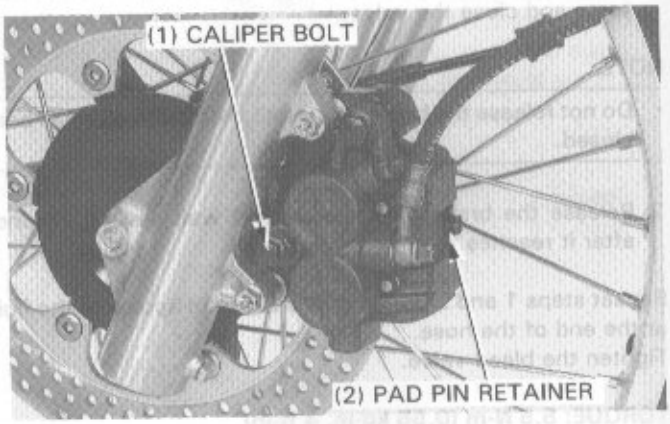

Pry one old pad against the caliper with a screwdriver to push the pistons into the caliper.

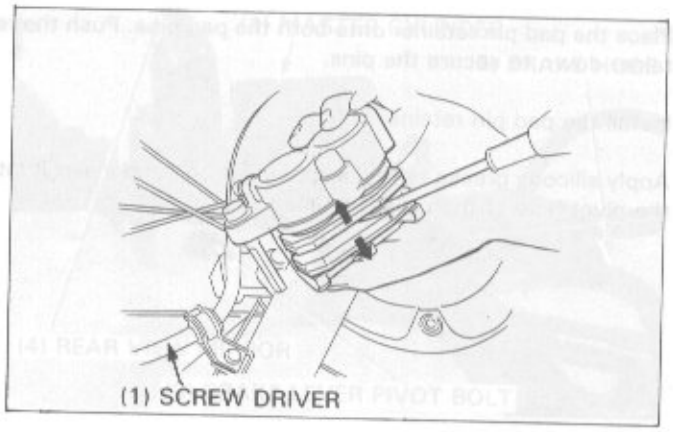

Pull the pad pins out of the caliper.
Remove the brake pads.

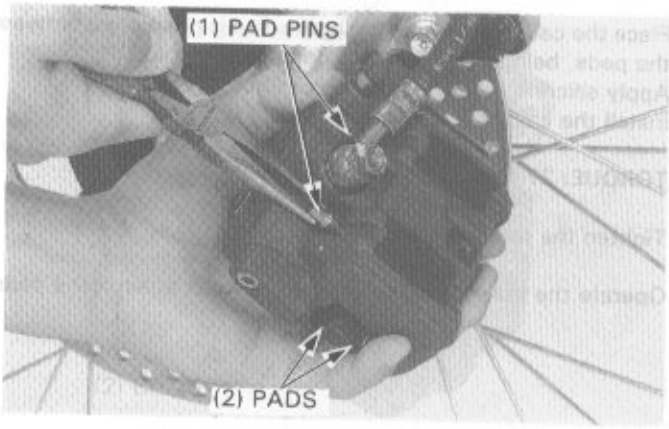

Position the pad spring in the caliper as shown.

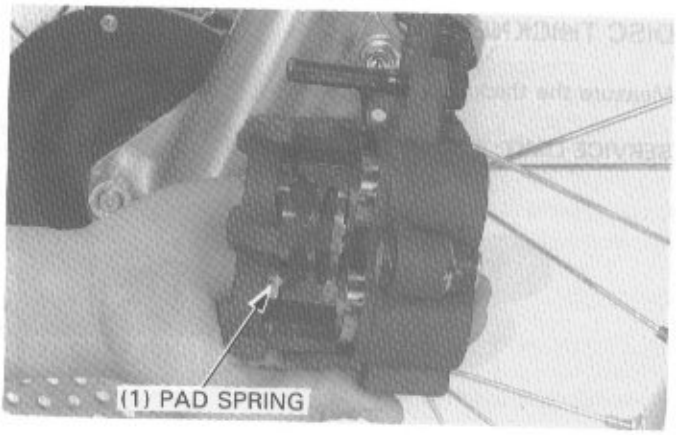

Install new pads in the caliper.

Install one pad pin first, then the other pin by pushing the pads against the caliper to depress the pad spring.

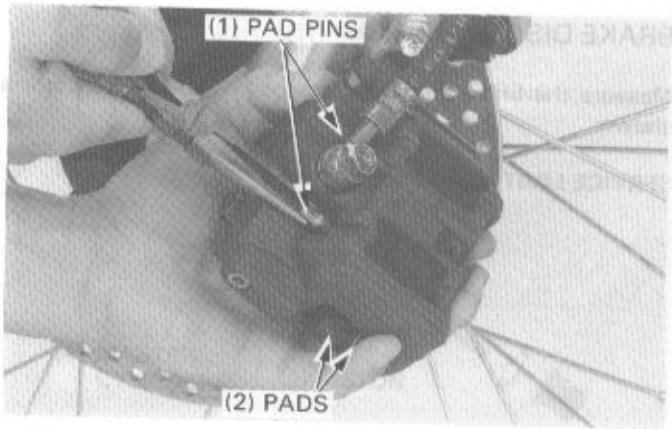

Place the pad pin retainer onto both the pad pins. Push the retainer down to secure the pins.

Install the pad pin retainer bolt.

Apply silicone grease to the caliper pivot bolt and insert it into the pivot hole of the caliper bracket.

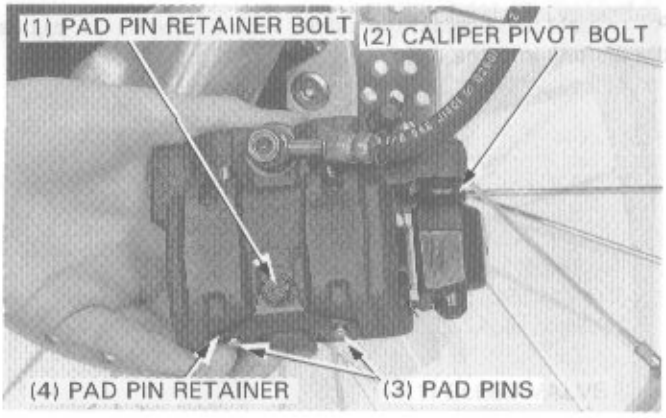

Place the caliper down so the brake disc is positioned between the pads, being careful not to damage the pads.
Apply silicone grease to the caliper bolt.
Install the caliper bolt and tighten it.

TORQUE: 27 N·m (2.7 kg-m, 20 ft-lb)

Tighten the retainer bolt securely.

Operate the brake lever to seat the pistons against the pads.

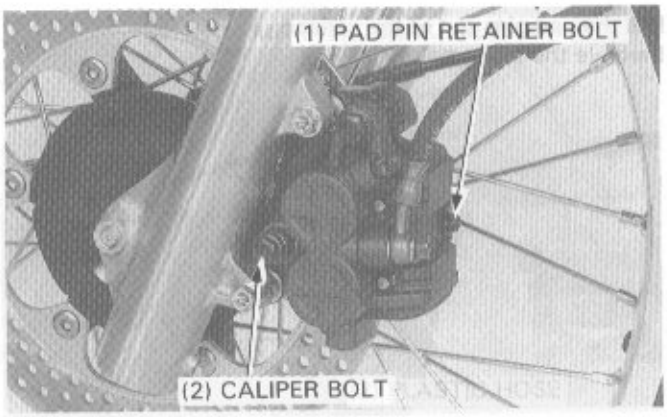

DISC THICKNESS

Measure the thickness of the disc.

SERVICE LIMIT: 3.5 mm (0.14 in)

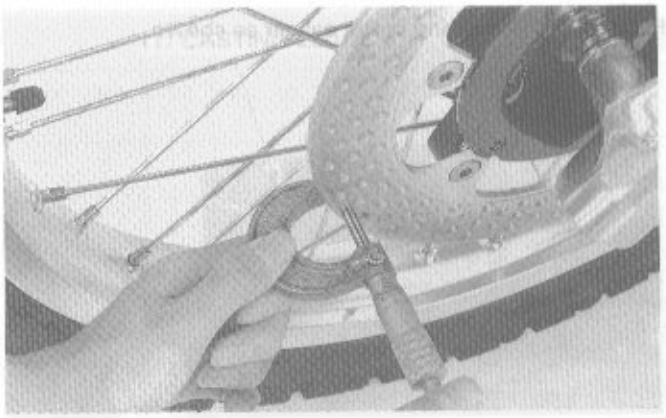

BRAKE DISC WARPAGE

Measure the brake disc for warpage with a dial indicator as shown.

SERVICE LIMIT: 0.30 mm (0.012 in)

MASTER CYLINDER

REMOVAL

Drain brake fluid from the hydraulic system.

Remove the brake lever and rear view mirror from the master cylinder. Disconnect the brake hose.

CAUTION

- *Avoid spilling brake fluid on painted surfaces. Place a rag over the fuel tank whenever the brake system is serviced.*

NOTE

- When removing the oil hose bolt, cover the end of the hose to prevent contamination. Secure the hose to prevent fluid from leaking out.

Remove the master cylinder.

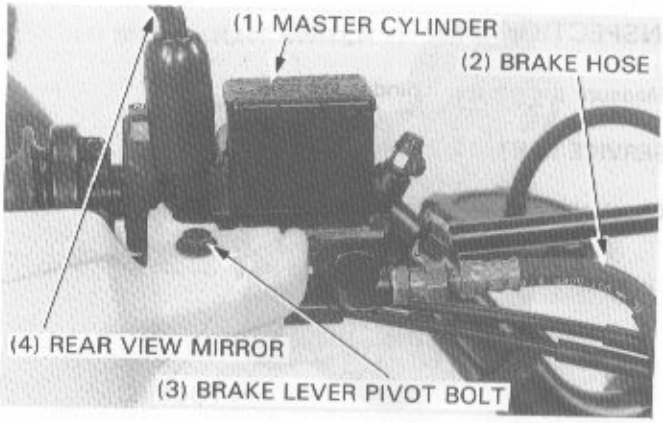

DISASSEMBLY

Remove the brake light switch and boot.

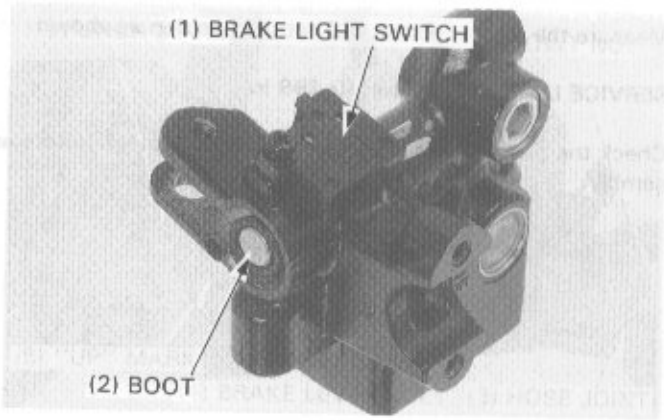

Remove the snap ring.
Remove the piston and spring.

TOOL:
Snap ring pliers **07914—3230001**

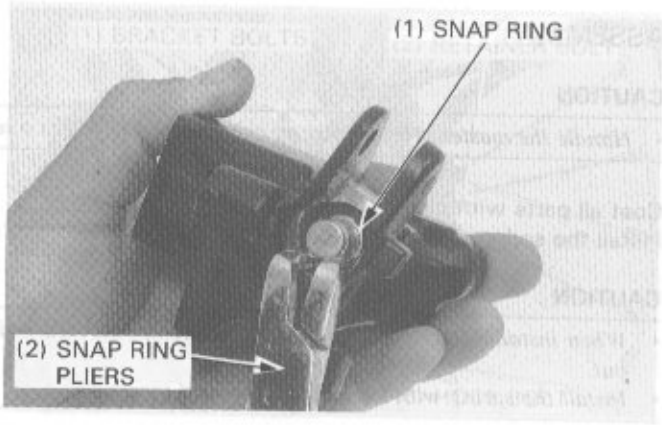

Clean the inside of the master cylinder, reservoir, spring and piston with clean brake fluid.

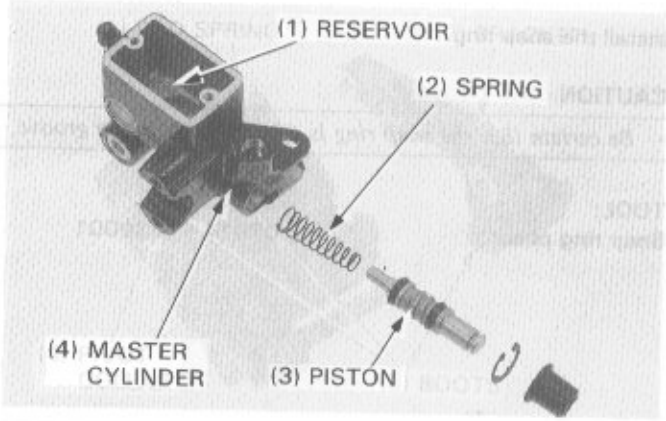

INSPECTION

Measure the master cylinder I.D.

SERVICE LIMIT: 12.76 mm (0.502 in)

Check the master cylinder for scores, scratches or nicks.

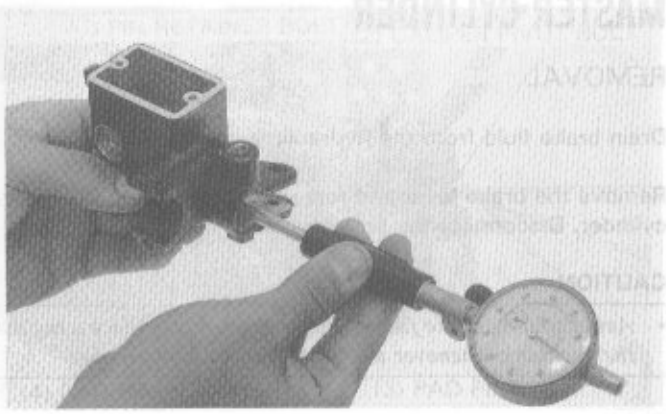

Measure the master piston O.D. at the position as shown.

SERVICE LIMIT: 12.65 mm (0.498 in)

Check the primary and secondary cups for damage before assembly.

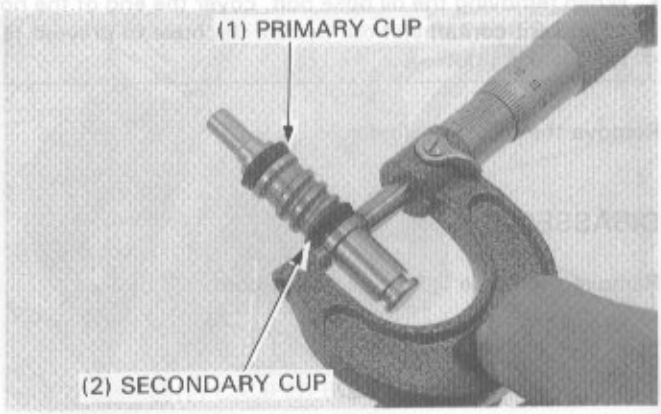

ASSEMBLY

CAUTION

- *Handle the master cylinder piston, cylinder and spring as a set.*

Coat all parts with clean brake fluid before assembly.
Install the spring and piston.

CAUTION

- *When installing the cups, do not allow the lips to turn inside out.*
- *Install the spring with its wide end toward inside.*

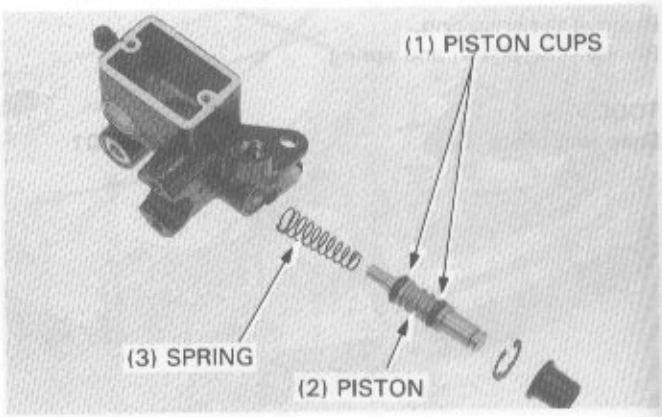

Install the snap ring.

CAUTION

- *Be certain that the snap ring is seated firmly in the groove.*

TOOL:
Snap ring pliers **07914–3230001**

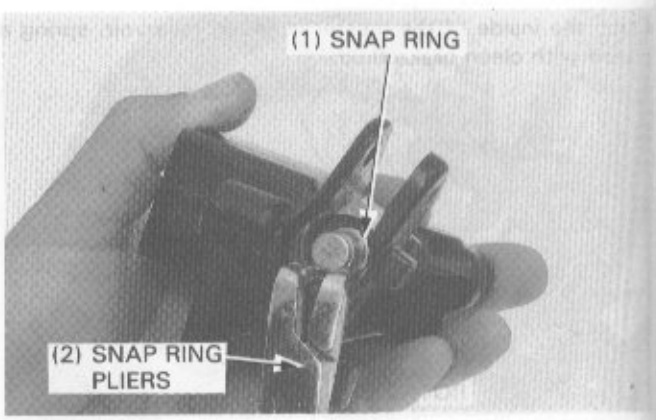

Install the boot and brake light switch as shown.

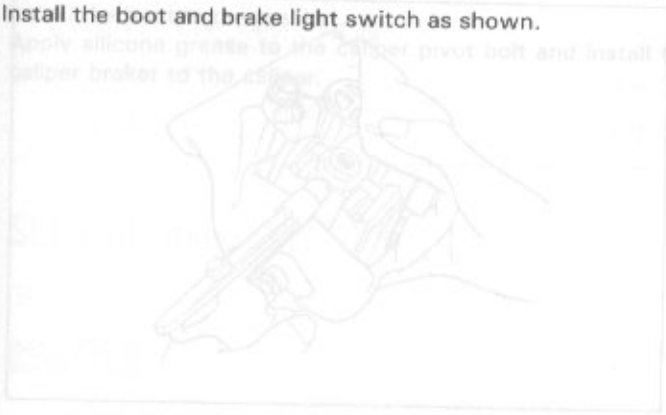

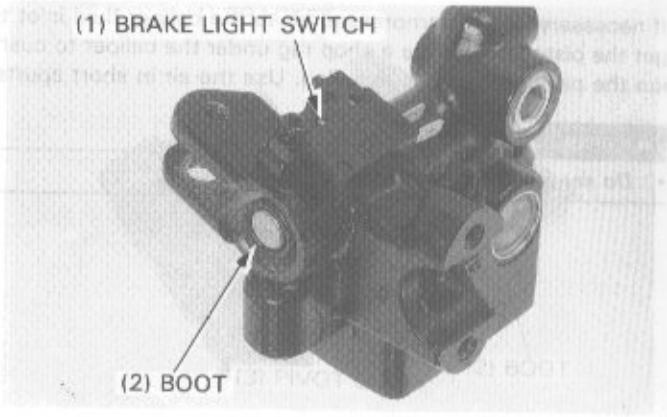

INSTALLATION

Set the master cylinder onto the handlebars with the holder "up" mark facing UP.
Temporarily install the holder bolts, aligning the slit of the master cylinder holder with the punch mark on the handlebars.
Tighten the upper bolt first, then the lower bolt.
Connect the brake light switch wires.
Install the rear view mirror and brake lever.

Install and tighten the hose joint with a new sealing washer if removed.

TORQUE: 35 N·m (3.5 kg-m, 25 ft-lb)

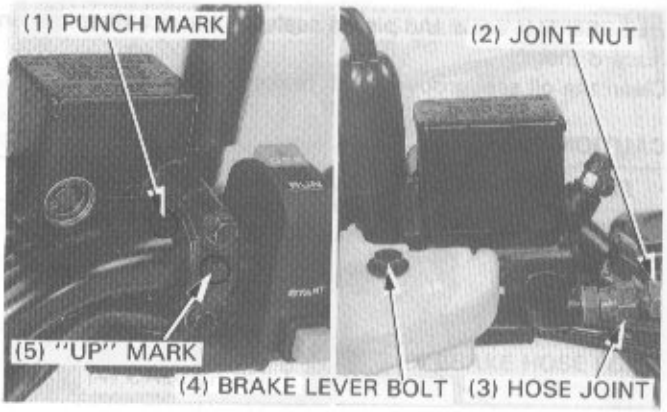

Connect the brake hose to the hose joint and tighten the joint nut to the specified torque.

TORQUE: 17 N·m (1.7 kg-m, 12 ft-lb)

Fill the reservoir with Dot 3 or 4 brake fluid to the casting ledge and bleed the brake system according to page 15-3.

BRAKE CALIPER

REMOVAL

Place a clean container under the caliper and disconnect the brake hose from the caliper.

CAUTION

- *Avoid spilling brake fluid on painted surfaces.*

Loosen the pad pin retainer bolt and caliper bolt.
Remove the caliper bracket bolts and caliper with bracket.

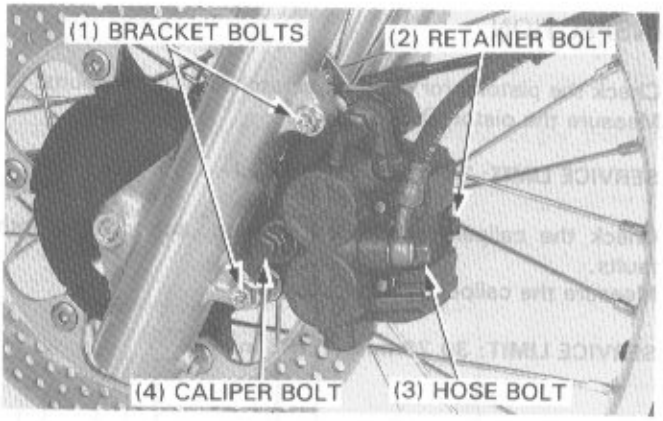

DISASSEMBLY

Remove the following components from the caliper.
- Retainer, pad pins and pads.
- Caliper bracket.
- Pad spring.
- Boots and pivot collar.

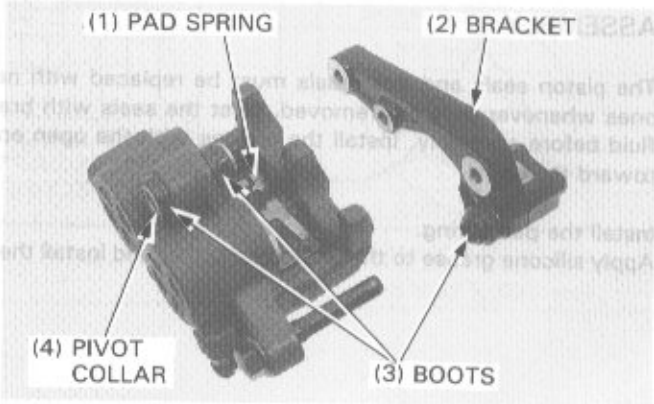

If necessary, apply compressed air to the caliper fluid inlet to get the piston out. Place a shop rag under the caliper to cushion the piston when it is expelled. Use the air in short spurts.

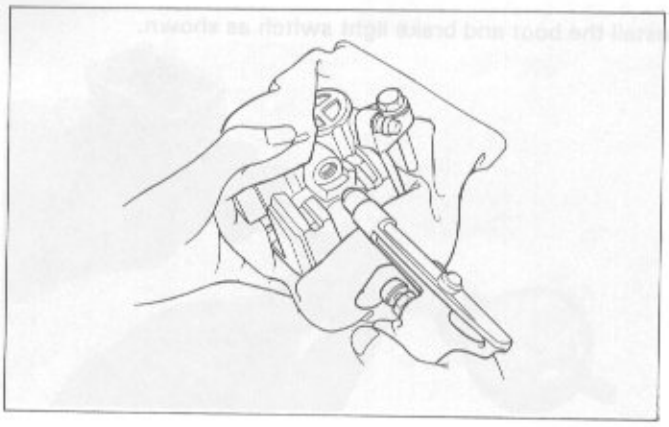

⚠ WARNING

- ***Do not bring the nozzle too close to the inlet.***

Push the dust seals and piston seals in, and pry them out and discard them.
Clean the oil seal grooves with brake fluid.

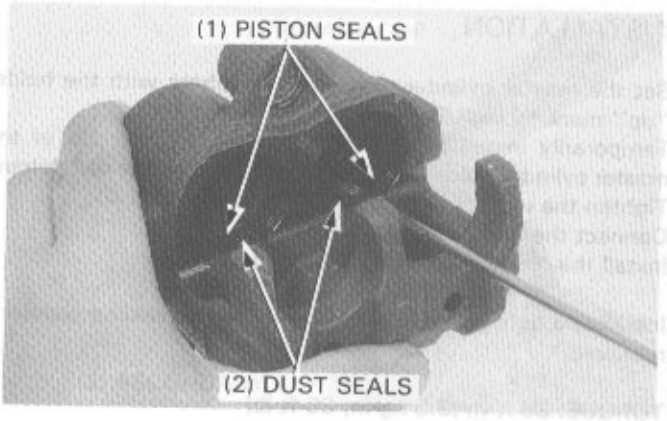

CAUTION

- *Be careful not to damage the piston sliding surfaces.*

INSPECTION

Check the pistons for scoring, scratches or other faults.
Measure the piston O.D.

SERVICE LIMIT: 30.14 mm (1.187 in)

Check the caliper cylinder for scoring, scratches or other faults.
Measure the caliper cylinder I.D.

SERVICE LIMIT: 30.29 mm (1.193 in)

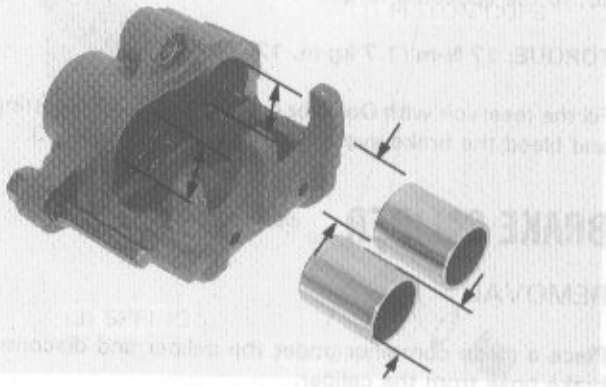

ASSEMBLY

The piston seals and dust seals must be replaced with new ones whenever they are removed. Coat the seals with brake fluid before assembly. Install the pistons with the open ends toward the pads.

Install the pad spring.
Apply silicone grease to the boots and collar, and install them.

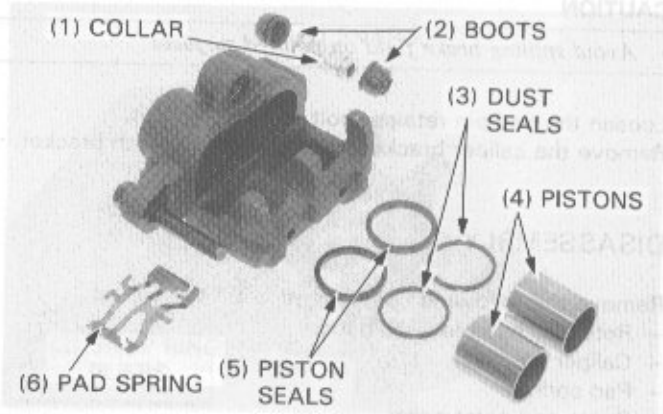

Install the boot to the bracket.
Apply silicone grease to the caliper pivot bolt and install the caliper braket to the caliper.

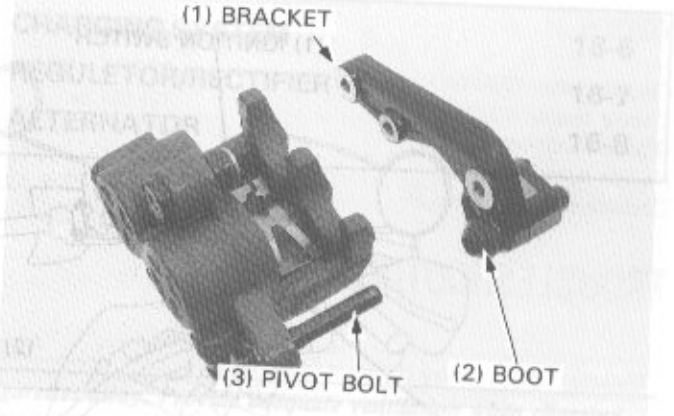

Install the pads, pad pins and retainer to the caliper.

Install the caliper assembly to the left fork so that the disc is positioned between the pads.

CAUTION

- *Be careful not to damage the pads.*

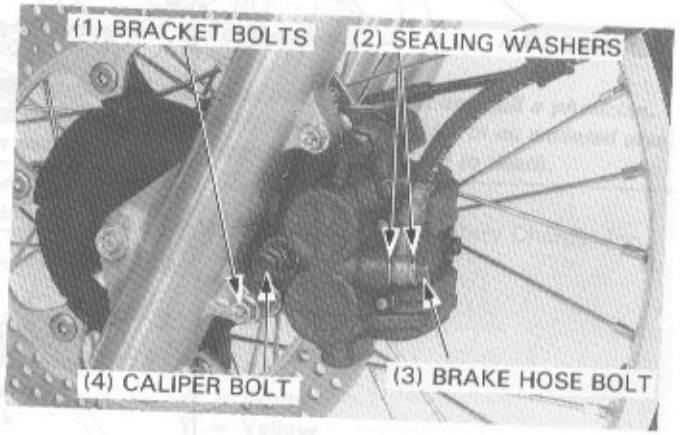

Apply silicone grease to the caliper bolt and temporarily install it.
Install and tighten the caliper bracket bolts.

TORQUE: 27 N·m (2.7 kg-m, 20 ft-lb)

Tighten the caliper bolt.

TORQUE: 27 N·m (2.7 kg-m, 20 ft-lb)

Connect the brake hose to the caliper with the hose bolt and two new sealing washers.

TORQUE: 35 N·m (3.5 kg-m, 25 ft-lb)

Bleed the air from the brake system (page 15-3).

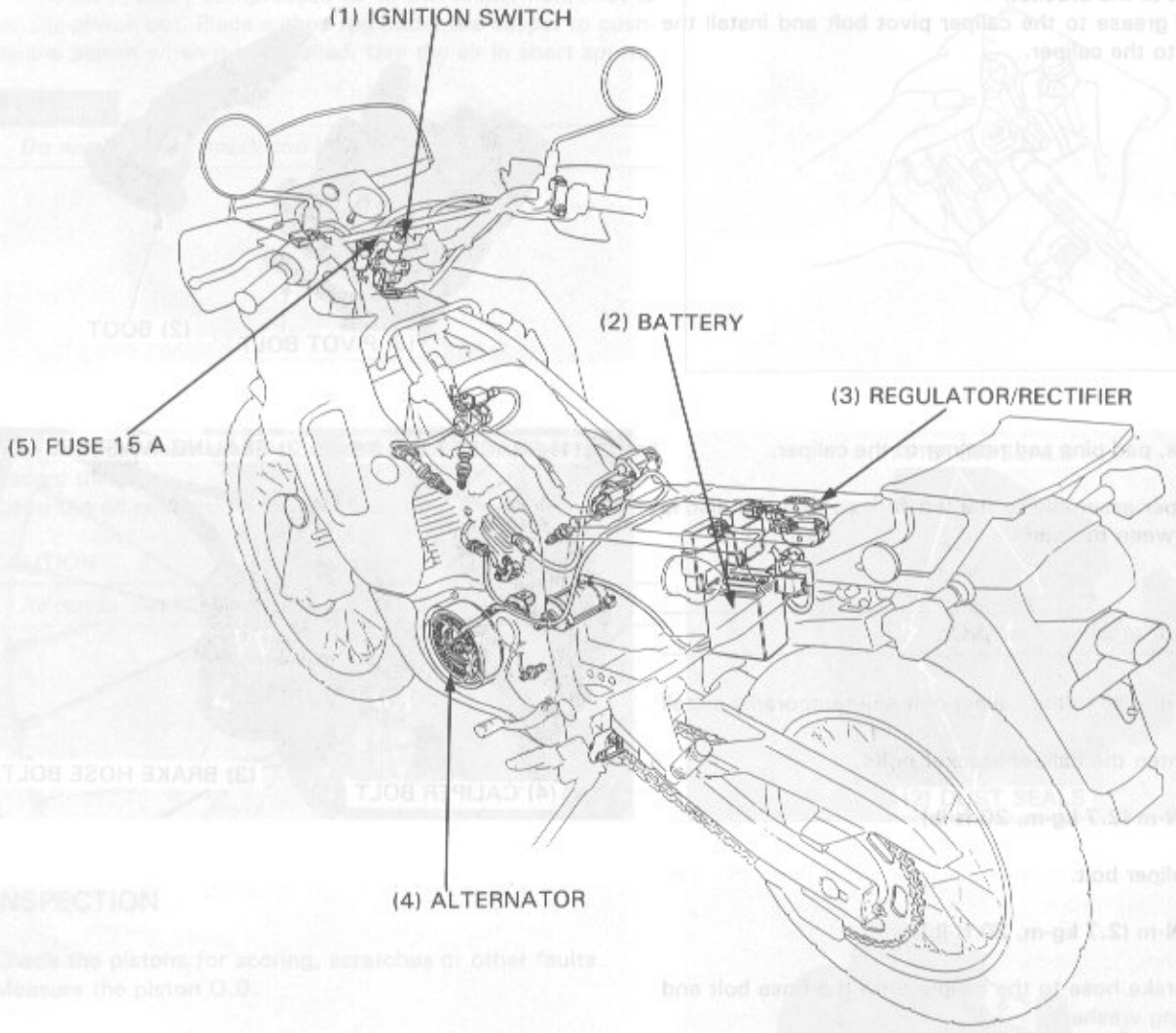
(1) IGNITION SWITCH
(2) BATTERY
(3) REGULATOR/RECTIFIER
(5) FUSE 15 A
(4) ALTERNATOR

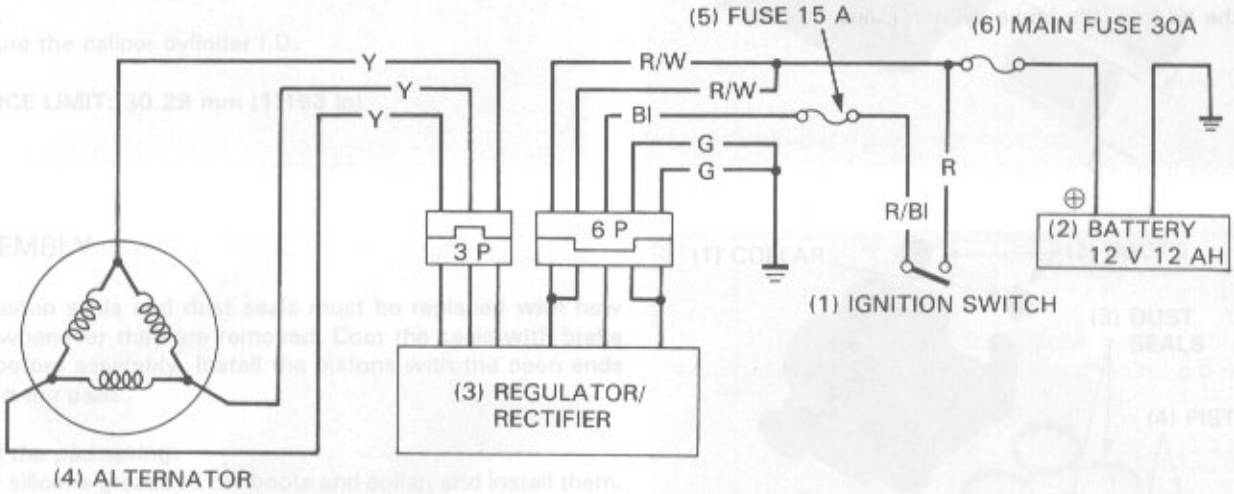
(5) FUSE 15 A
(6) MAIN FUSE 30A
Y
Y
Y
R/W
R/W
Bl
G
G
R
R/Bl
3 P
6 P
(2) BATTERY
12 V 12 AH
(1) IGNITION SWITCH
(3) REGULATOR/
RECTIFIER
(4) ALTERNATOR

16. BATTERY/CHARGING SYSTEM

SERVICE INFORMATION	16-1	CHARGING SYSTEM	16-6
TROUBLESHOOTING	16-2	REGULETOR/RECTIFIER	16-7
BATTERY	16-3	ALTERNATOR	16-8

SERVICE INFORMATION

GENERAL

⚠ WARNING

- ***The battery gives off explosive gases; keep sparks, flames and cigarettes away. Provide adequate ventilation when charging.***
- ***The battery contains sulfuric acid (electrolyte). Contact with skin or eyes may cause severe burns.***
  - ***— If electrolyte gets on your skin, flush with water.***
  - ***— If electrolyte gets in your eyes, flush with water for at least 15 minutes and call a physician.***
- ***Electrolyte is poisonous.***
  - ***— If swallowed, drink large quantities of water or milk and follow with milk magnesia or vegetable oil and call a physician.***
- ***If the engine must be running to do some work, make sure the area is well-ventilated. Never run the engine in an enclosed area. The exhaust contains posisonous carbon monoxide gas that can cause loss of consciousness and may lead to death.***

- Refer to Service Letter #48 and Operation Manual for the Honda Battery Tester and the Christie Battery Charger for:
  - — Preparation of new batteries
  - — Battery testing
  - — Battery charging
- The following color codes are used throughout the electrical sections.

Bu = Blue	G = Green	Lg = Light Green	R = Red
Bl = Black	Gr = Gray	O = Orange	W = White
Br = Brown	Lb = Light Blue	P = Pink	Y = Yellow

- The battery fluid level should be checked regularly. Fill with distilled water when necessary.
- Quick charge a battery only in an emergency; slow-charging is preferred.
- Remove the battery from the motorcycle for charging. If the battery must be charged on the motorcycle, disconnect the battery cables.
- When inspecting the charging system, check the system components and lines step-by-step according to the trouble-shooting on next page.
- All charging system components can be tested on the motorcycle.
- Alternator removal is given in Section 8.

SPECIFICATIONS

ITEM			STANDARD (20°C/68°F)
Battery	Capacity		12V–12AH
	Specific gravity	Fully charged	1.270–1.290
		Needs charging	Below 1.260
	Charging current		1.2 A max.
	Leakage ampere		Less than or equal to 1 mA
Alternator	Capacity		0.31 kW/5,000 rpm
	Charging coil resistance		0.1–1.0 Ω
	Charging start		1,000 rpm
Regulator/rectifier	Type		Transistorized non-adjustable
	Regulated voltage		13.5–15.5 V at 5,000 rpm

TOOLS

Circuit tester (SANWA)	07308—0020000 or
Circuit tester (KOWA)	TH-5H or
Digital multi-tester (KOWA)	07411—0020000 or KS-AHM-32-003 (U.S.A. only)
Honda battery tester	07GMJ—0010000
Christie battery charger	MC 1012/2 (U.S.A. only)

TROUBLESHOOTING

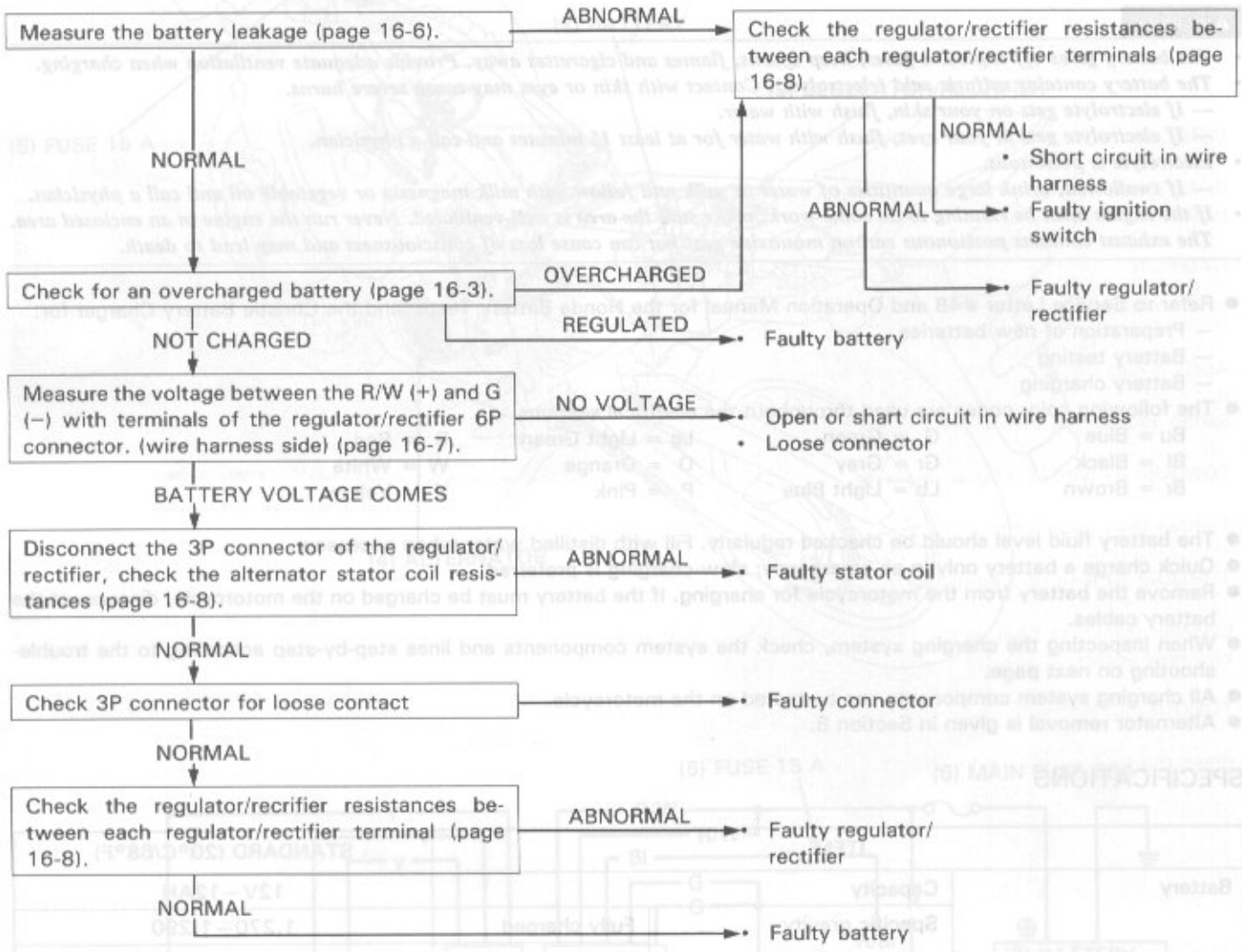

BATTERY

⚠WARNING

- ***The battery gives off explosive gases; keep sparks, flames and cigarettes away. Provide adequate ventilation when charging.***
- ***The battery contains sulfuric acid (electrolyte). Contact with skin or eyes may cause severe burns. Wear protective clothing and a face shield.***
  - ***— If electrolyte gets on your skin, flush with water***
  - ***— If electrolyte gets in your eyes, flush with water for at least 15 minutes and call a physician.***
- ***Electrolyte is poisonous.***
  - ***— If swallowed, drink large quantities of water or milk and follow with milk of magnessia or vegetable oil and call a physician.***

REMOVAL

Remove the right side cover (page 12-4).
Disconnect the negative terminal first, then positive terminal at the battery.
Remove the bolts and battery holder.
Disconnect the battery breather tube.
Pull the battery out of the battery case, and remove the battery.

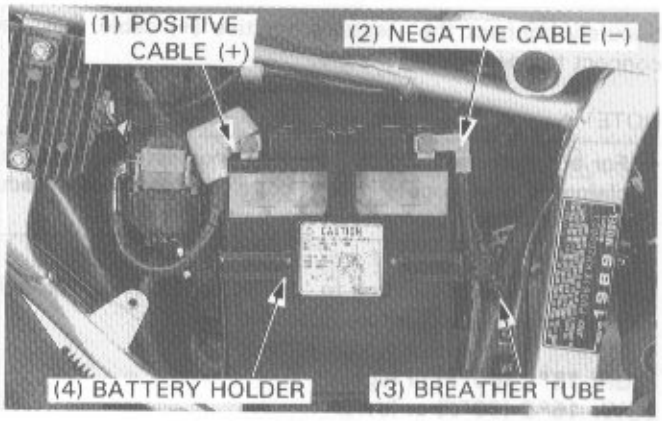

TESTING SPECIFIC GRAVITY

Test each cell with a hydrometer.

SPECIFIC GRAVITY: 1.270–1.290 (20°C/68°F)

1.270–1.290	Fully charged
Below 1.260	Undercharged

NOTE

- The battery must be recharged if the specific gravity is below 1.230.
- The specific gravity varies with the temperature as shown in the accompanying table.
- Replace the battery if sulfation is evident or if the space below the cell plates is filled with sediment.

⚠WARNING

- ***The battery contains sulfuric acid. Avoid contact with skin, eyes, or clothing.***
  Antidote: Flush with water and get prompt medical attention.

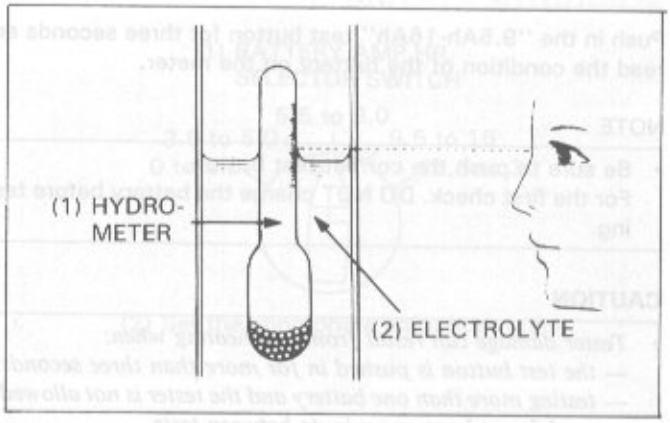

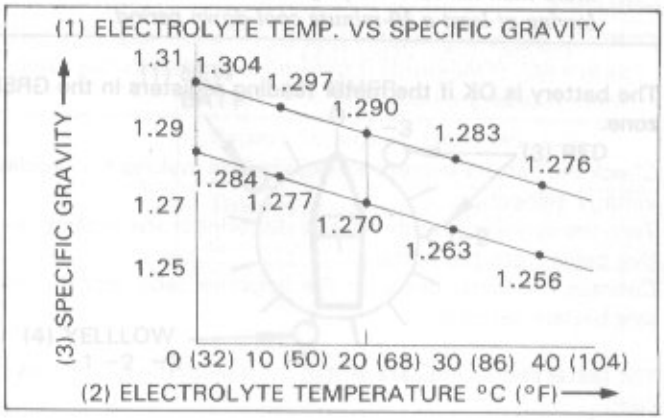

TESTING

NOTE

- Refer to the Service Letter #48 and the Operation Manual for the Honda Battery Tester and the Christie battery Charger for battery Testing Procedure.

NOTE

- Use the Honda battery Tester (07GMJ—0010000) to test the battery.

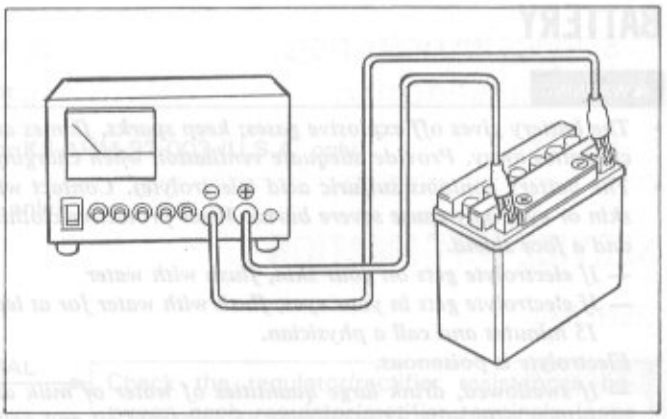

Remove the battery.

Securely connect the tester's positive (+) cable first, then connect the negative (−) cable.

NOTE

- For accurate test results, be sure the tester's cables and clamps are in good working condition and that a secure connection can be made at the battery.

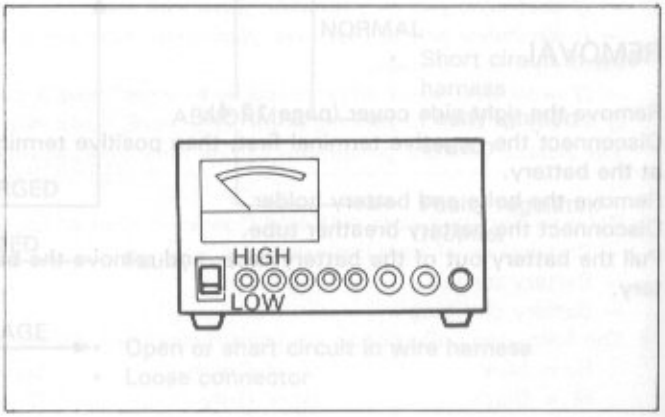

Set the temperature switch to "HIGH" or "LOW" depending on the ambient temperature.

HIGH: 15°C (60°F) or higher
LOW: 15°C (60°F) or lower

Push in the "9.5Ah-16Ah" test button for three seconds and read the condition of the battery on the meter.

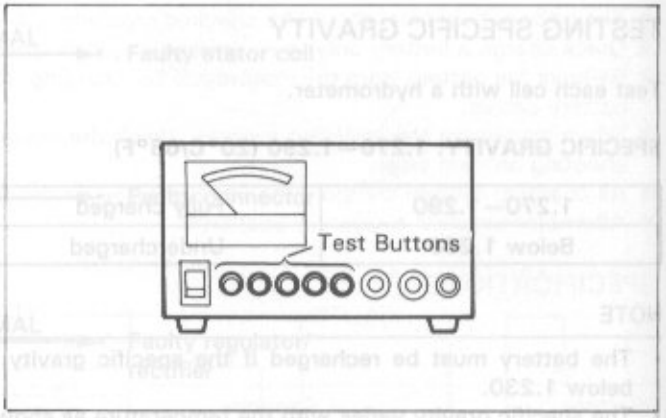

NOTE

- Be sure to push the correct test button.
  For the first check. DO NOT charge the battery before testing.

CAUTION

- *Tester damage can result from overheating when:*
  - *— the test button is pushed in for more than three seconds.*
  - *— testing more than one battery and the tester is not allowed to cool for at least one minute between tests.*
  - *— more than ten tests are performed consecutively without allowing at least a 30-minute cool-down period.*

The battery is OK if the meter reading registers in the GREEN zone.

If the meter reading registers in the YELLOW or RED zone, charge the battery, and re-test and judge it in accordance with the chart below.

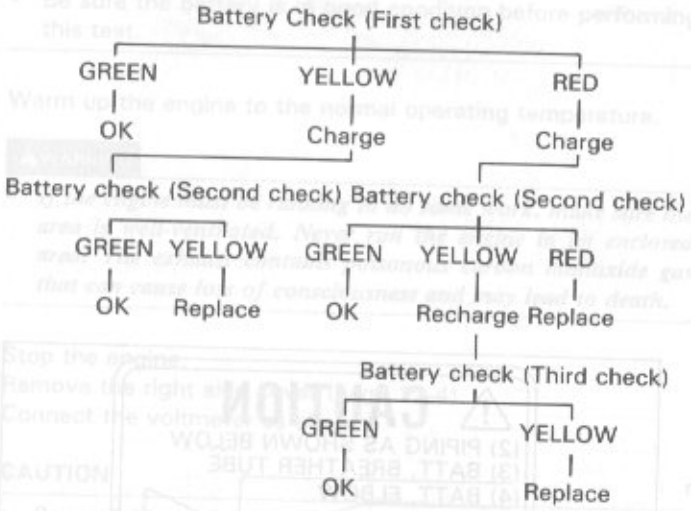

CHARGING

NOTE

- Use the CHRISTIE Battery Charger (MC 1012/2) to charge the battery.

Before operating the charger:

- Be sure the area around the charger is well ventilated and clear of flammable materials, heat, humidity, water and dust.
- Clean the battery terminals and position the battery as far away from the charger as the leads will permit.
- Do not place the battery below the charger; gases from the battery may corrode and damage the charger.
- Do not place the battery on top of the charger. Be sure the air vents are not blocked.

⚠ WARNING

- ***During operation, the charger will generate heat. To avoid causing a fire, always clear the work area of flammable materials such as gasoline, brake fluid, electrolyte, or cloth towels.***

Turn the Power Switch to the OFF position.

Set the Battery Amp. Hr. Selector Switch to the "9.5 to 16" position.

Set the Timer to the position indicated by the Honda Battery Tester: RED—3. RED—2. or YELLOW—1. If you are charging a new battery, set the switch to the NEW BATT position.

Attach the clamps to the battery terminals; RED to Positive. BLACK to Negative.

CAUTION

- *Connect the battery cables only when the Power Switch is OFF.*

Turn the Power Switch to the ON position.

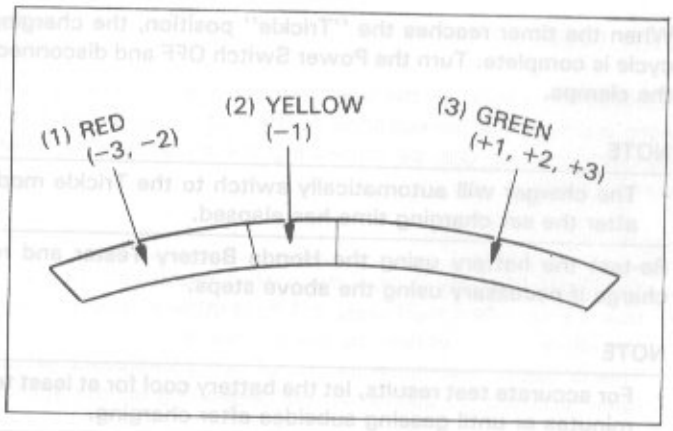

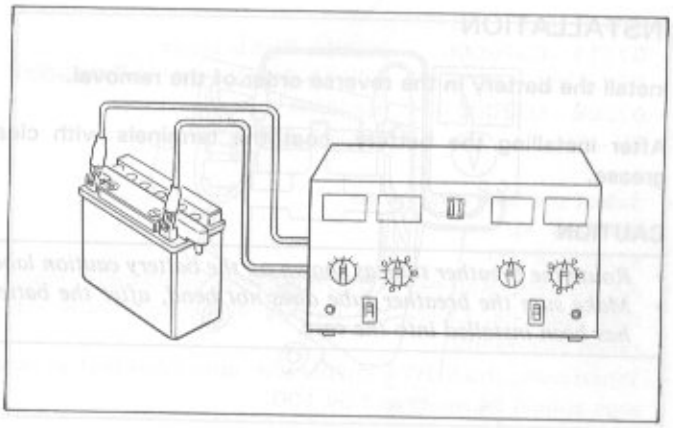

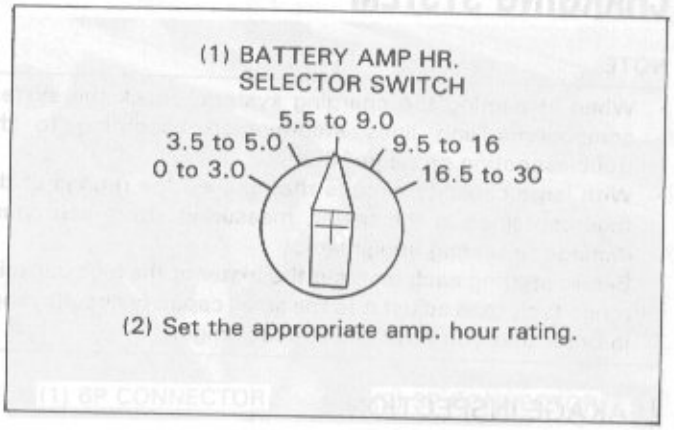

(2) Set the appropriate amp. hour rating.

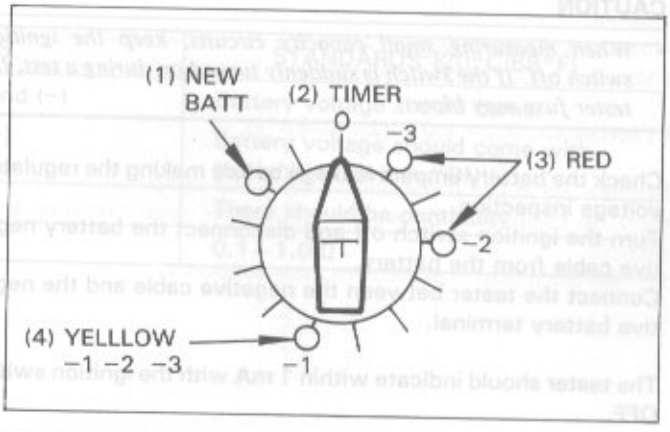

When the timer reaches the "Trickle" position, the charging cycle is complete. Turn the Power Switch OFF and disconnect the clamps.

NOTE

- The charger will automatically switch to the Trickle mode after the set charging time has elapsed.

Re-test the battery using the Honda Battery Tester and re-charge if necessary using the above steps.

NOTE

- For accurate test results, let the battery cool for at least ten minutes or until gassing subsides after charging.

INSTALLATION

Install the battery in the reverse order of the removal.

After installing the battery, coat the terminals with clean grease.

CAUTION

- *Route the breather tube as shown on the battery caution label.*
- *Make sure the breather tube does not bend, after the battery has been installed into the case.*

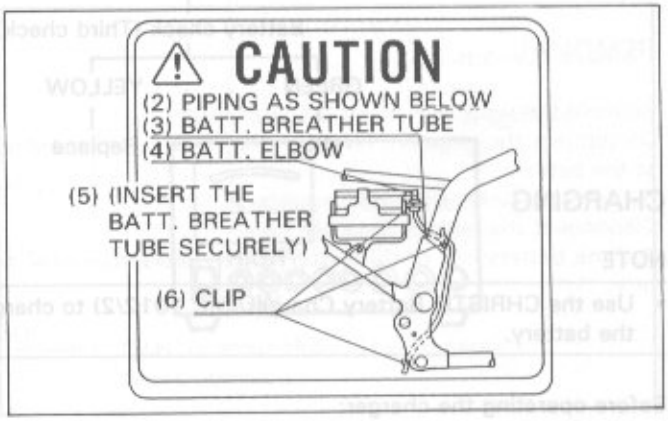

CHARGING SYSTEM

NOTE

- When inspecting the charging system, check the system components and lines step-by-step according to the troubleshooting on page 16-2.
- With large capacity circuits that exceed the ratings of the fuse contained in the tester, measuring errors can cause damage to testing equipment.
  Before starting each test, set the tester at the high capacity range first, then adjust it to the small capacity circuits range in order that you have the correct range.

LEAKAGE INSPECTION

CAUTION

- *When measuring small capacity circuits, keep the ignition switch off. If the switch is suddenly turned on during a test, the tester fuse may blow.*

Check the battery ampere leakage before making the regulated voltage inspection.
Turn the ignition switch off and disconnect the battery negative cable from the battery.
Connect the tester between the negative cable and the negative battery terminal.

The tester should indicate within 1 mA with the ignition switch OFF.

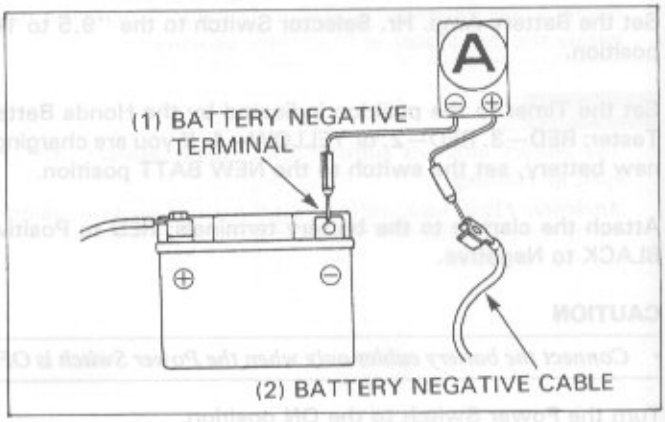

REGULATED VOLTAGE INSPECTION

NOTE

- Be sure the battery is in good condition before performing this test.

Warm up the engine to the normal operating temperature.

⚠WARNING

- ***If the engine must be running to do some work, make sure the area is well-ventilated. Never run the engine in an enclosed area. The exhaust contains poisonous carbon monoxide gas that can cause loss of consciousness and may lead to death.***

Stop the engine.
Remove the right side cover (page 12-4).
Connect the voltmeter as shown.

CAUTION

- *Be careful not to let the battery positive cable contact the frame while testing.*

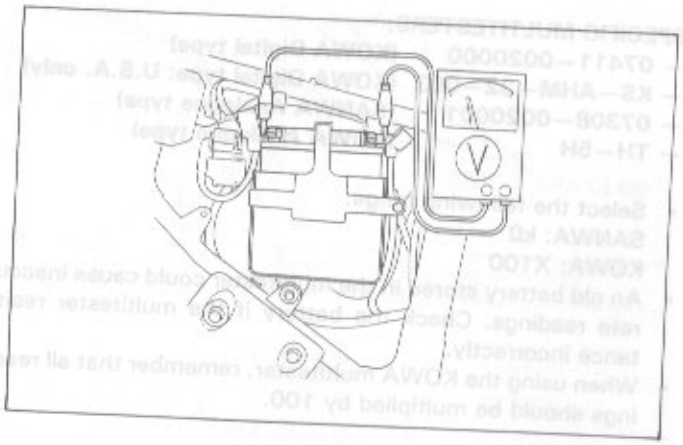

Restart the engine and allow it to idle, then increase the engine speed gradually.
The voltage should be controlled as specified below:

STANDARD: 13.5–15.5 V at 5,000 rpm (20°C/68°F)

REGULATOR/RECTIFIER

INSPECTION

Remove the seat (page 4-3).
Disconnect the 3P and 6P connectors of the regulator/rectifier.
Check them for loose contact or rusting the terminals.
If the regulated voltage reading is not within the specified range, check the items between the connector terminals wire harness side, following the chart below.

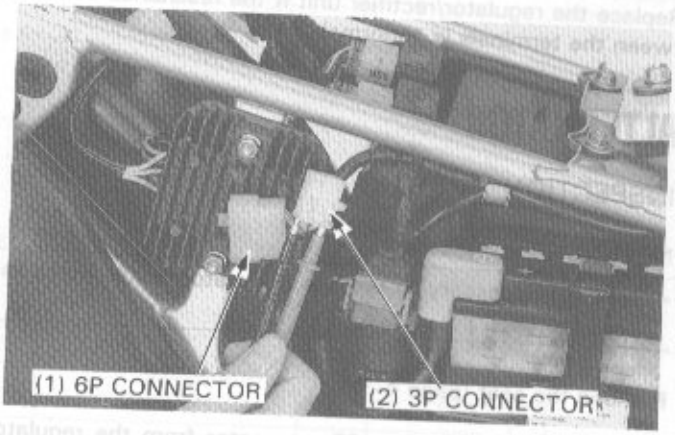

ITEM	TERMINALS	STANDARDS (20°C/68°F)
Battery charging line	Red/White (+) and Ground (–)	Battery voltage should come.
Feedback line	Black (+) and Ground (–)	Battery voltage should come with the ignition switch "ON".
Ground line	Green and body ground	There should be continuity.
Alternator coil line	Yellow and Yellow	0.1–1.0 Ω

UNIT INSPECTION

Provided the circuit at the wire harness side are normal and there are no loose connections at the connector, inspect the regulator/rectifier unit by measuring the resistance between the terminals.

NOTE

- You'll get false readings if the probes touch your fingers.
- Use the specified multitesters. Using other equipment may not allow you to obtain the correct results.
  This is due to the characteristic of semiconductors, which have different resistance values depending on the applied voltage.

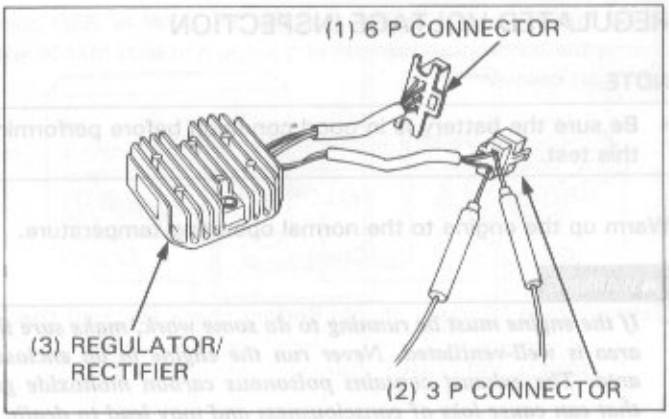

SPECIFIC MULTITESTERS:
- **07411–0020000 (KOWA Digital type)**
- **KS–AHM–32–003 (KOWA Digital type; U.S.A. only)**
- **07308–0020001 (SANWA Analogue type)**
- **TH–5H (KOWA Analoque type)**

- Select the following range:
  SANWA: kΩ
  KOWA: X100
- An old battery stored in the multitester could cause inaccurate readings. Check the battery if the multitester resistance incorrectly.
- When using the KOWA multitester, remember that all readings should be multiplied by 100.

Unit: kΩ

⊕ Probe / ⊖ Probe	Black	Red/ White	Yellow	Yellow	Yellow	Green
Black		20–100	15–80	15–80	15–80	10–50
Red/White	∞		∞	∞	∞	∞
Yellow	∞	0.5–10		∞	∞	∞
Yellow	∞	0.5–10	∞		∞	∞
Yellow	∞	0.5–10	∞	∞		∞
Green	1–20	1–20	0.5–10	0.5–10	0.5–10	

Replace the regulator/rectifier unit if the resistance value between the terminals is abnormal.

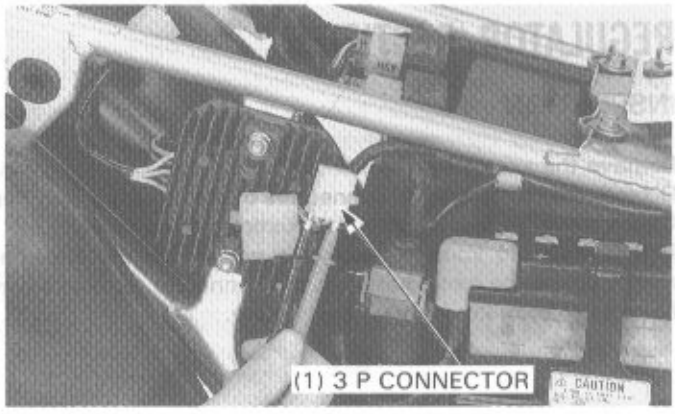

ALTERNATOR

INSPECTION

NOTE

- It is not necessary to remove the stator coil to make this test.

Remove the seat (page 4-3).

Disconnect the alternator 3P connector from the regulator/rectifier.
Measure the resistance between the yellow wire terminals and check for no continuity between each terminal and ground.

STANDARD: 0.1–1.0 Ω (20°C/68°F)

Replace the stator if the resistance is out of specification or if there is continuity between any yellow wire terminal and ground.
For the alternator replacement, see section 8.

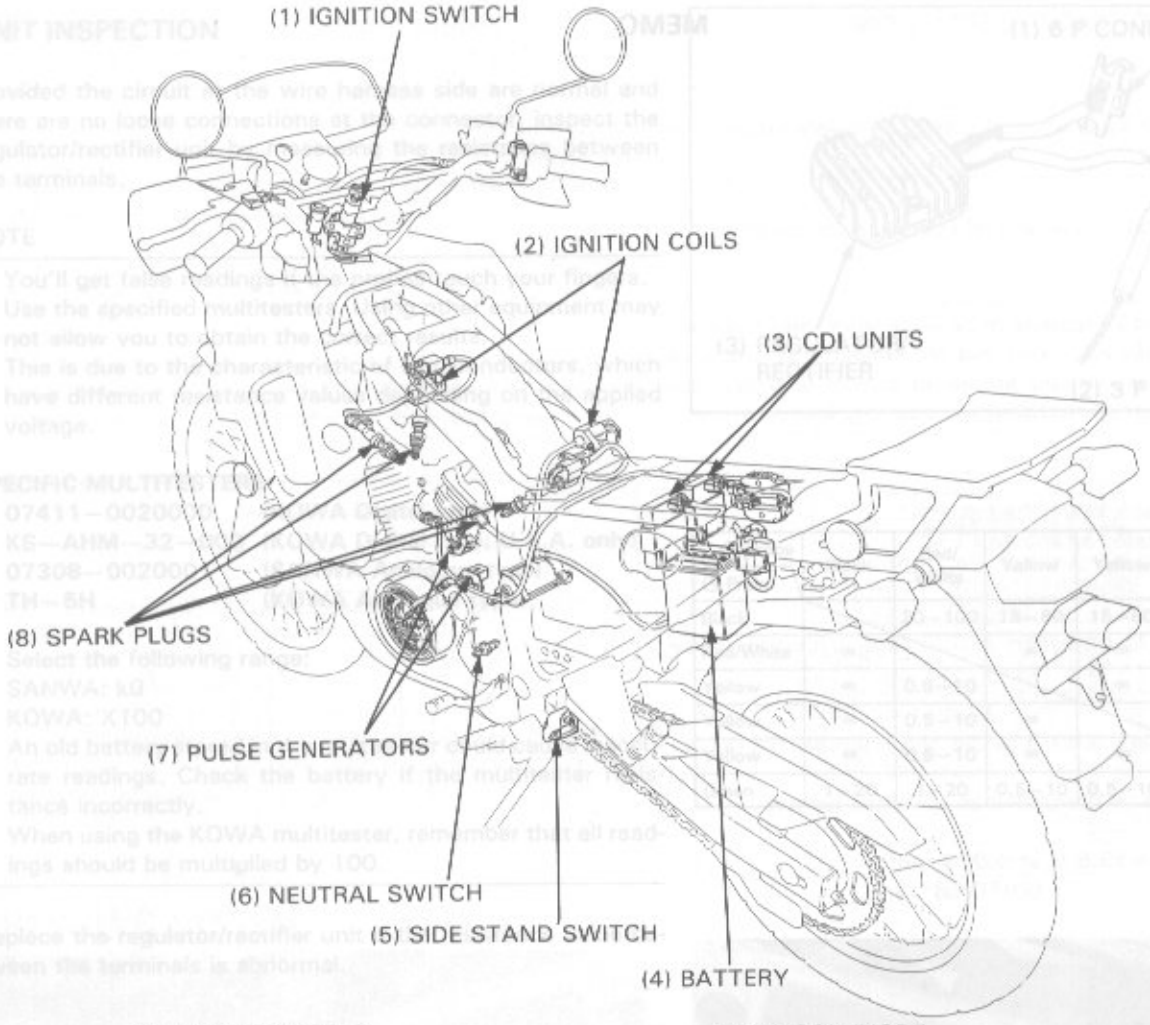
(1) IGNITION SWITCH
(2) IGNITION COILS
(3) CDI UNITS
(8) SPARK PLUGS
(7) PULSE GENERATORS
(6) NEUTRAL SWITCH
(5) SIDE STAND SWITCH
(4) BATTERY

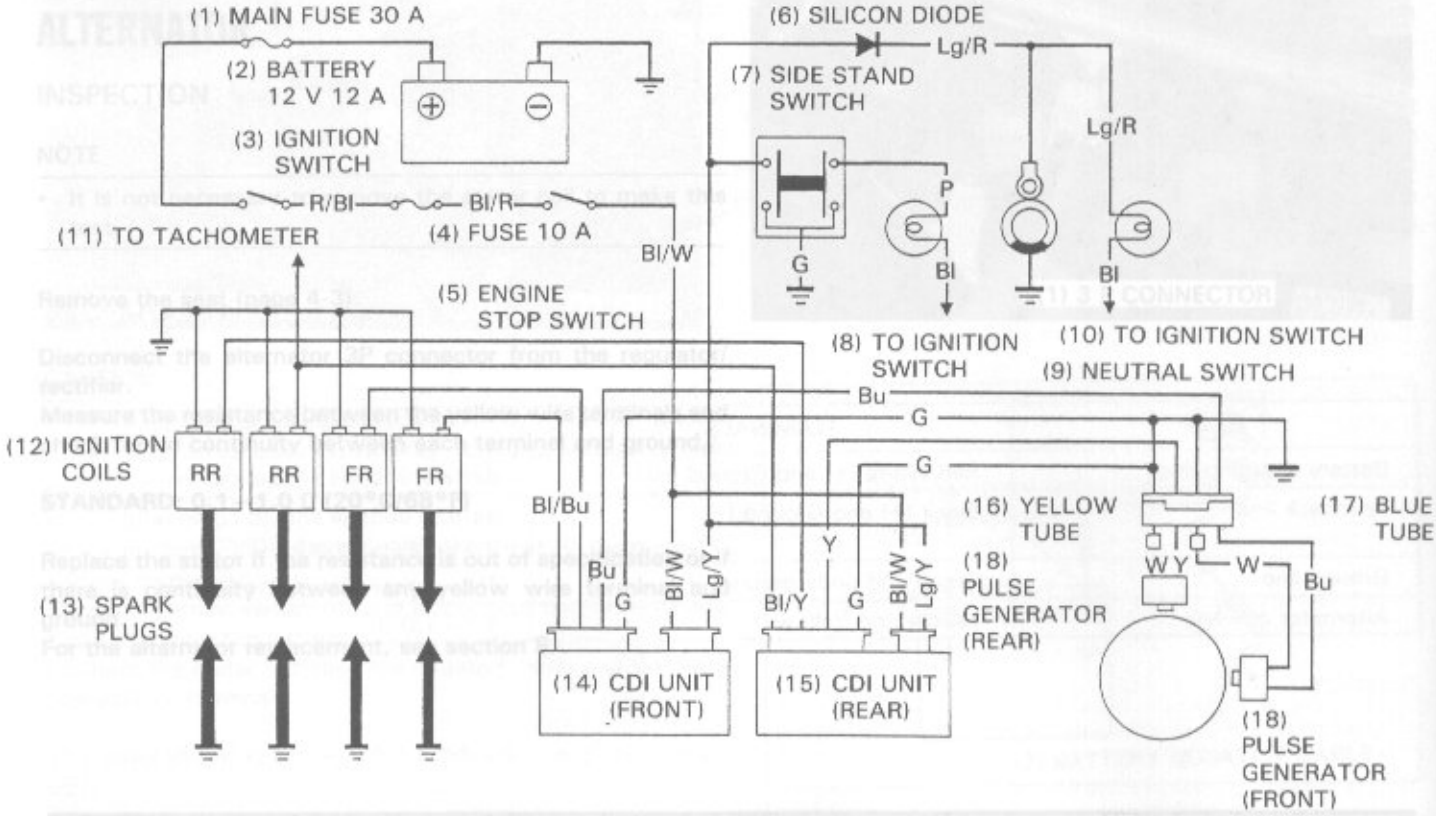
(1) MAIN FUSE 30 A
(2) BATTERY 12 V 12 A
(3) IGNITION SWITCH
R/Bl
Bl/R
(4) FUSE 10 A
(11) TO TACHOMETER
Bl/W
(5) ENGINE STOP SWITCH
(6) SILICON DIODE
Lg/R
(7) SIDE STAND SWITCH
Lg/R
P
G
Bl
Bl
(8) TO IGNITION SWITCH
(10) TO IGNITION SWITCH
(9) NEUTRAL SWITCH
Bu
G
G
(12) IGNITION COILS
RR
RR
FR
FR
Bl/Bu
Bu
G
Bl/W
Lg/Y
Bl/Y
Y
G
Bl/W
Lg/Y
(16) YELLOW TUBE
(17) BLUE TUBE
W Y
W
Bu
(18) PULSE GENERATOR (REAR)
(13) SPARK PLUGS
(14) CDI UNIT (FRONT)
(15) CDI UNIT (REAR)
(18) PULSE GENERATOR (FRONT)

17. IGNITION SYSTEM

SERVICE INFORMATION	17-1	PULSE GENERATOR	17-5
TROUBLESHOOTING	17-2	SIDE STAND SWITCH	17-6
SYSTEM INSPECTION	17-4	SILICON DIODE	17-6
IGNITION COIL	17-4	IGNITION TIMING	17-6

SERVICE INFORMATION

GENERAL

- Ignition timing cannot be adjusted since the CDI (Capacitive Discharge Ignition) unit is non-adjustable. If ignition timing is incorrect, check the system components and replace the faulty parts.
- When inspect the ignition system, check the system components and lines step-by-step according to the troubleshooting on next page.
- Each pair of the spark plugs (FRONT and REAR) has its own ignition circuit.
- For spark plug gap inspection and adjustment procedure, see page 3-6.
- For pulse generator removal and installation, see page 7-9.

SPECIFICATIONS

ITEM			SPECIFICATIONS (20°C/68°F)	
Spark plugs			NGK	ND
	Standard		DPR8EA-9	X24EPR-U9
	For cold climate (Below 5°C/41°F)		DPR7EA-9	X22EPR-U9
	For extended high speed driving		DPR9EA-9	X27EPR-U9
Spark plug gap			0.8–0.9 mm (0.031–0.035 in)	
Ignition timing	Initial (F mark)		10° BTDC/idle	
	Advance starts		2,000 rpm	
	Full advance		30° BTDC/4,500 rpm	
Ignition coil resistance	Primary		0.1–0.2 Ω	
	Secondary	With cap	7.4–10.8 kΩ	
		Without cap	3.6–4.5 kΩ	
Pulse generator	Coil resistance		360–540 Ω	
Firing order			Front–232°–Rear–488°–Front	

TOOLS

Circuit tester (SANWA) or Circuit tester (KOWA) or Digital multi-tester (KOWA)	07308–0020000 TH–5H 07411–0020000 or KS-AHM-32-003 (U.S.A. only)

TROUBLESHOOTING

⚠ WARNING

- *When performing a spark test, keep open flames or sparks away from the work area.*

No spark at all plugs

Replace with known good spark plugs, conduct the spark plug test.
→ SPARK → • Faulty plugs.
↓ NO SPARK

Check for poorly connected or loose spark plug wires. If loose, screw spark plug cap securely into the spark plug wire.
→ SPARK → • Loose wires.
↓ NO SPARK

Check for loose or poorly connected CDI unit. Correct it and conduct the spark plug test again.
→ SPARK → • Poorly connected CDI unit connector.
↓ NO SPARK

Disconnect CDI unit connector and check related circuit at the connector.
Measure resistance of the secondary coil (page 17-4)
→ NORMAL → • Faulty CDI unit.
↓ ABNORMAL

Check components individually.
Compare results with the measured value above.

↓ NORMAL (If measurements differ)
- Poorly connected component connector.
- Broken wire harness between unit and component.

→ ABNORMAL (Same measurements)
- Faulty related components.

Side stand circuit

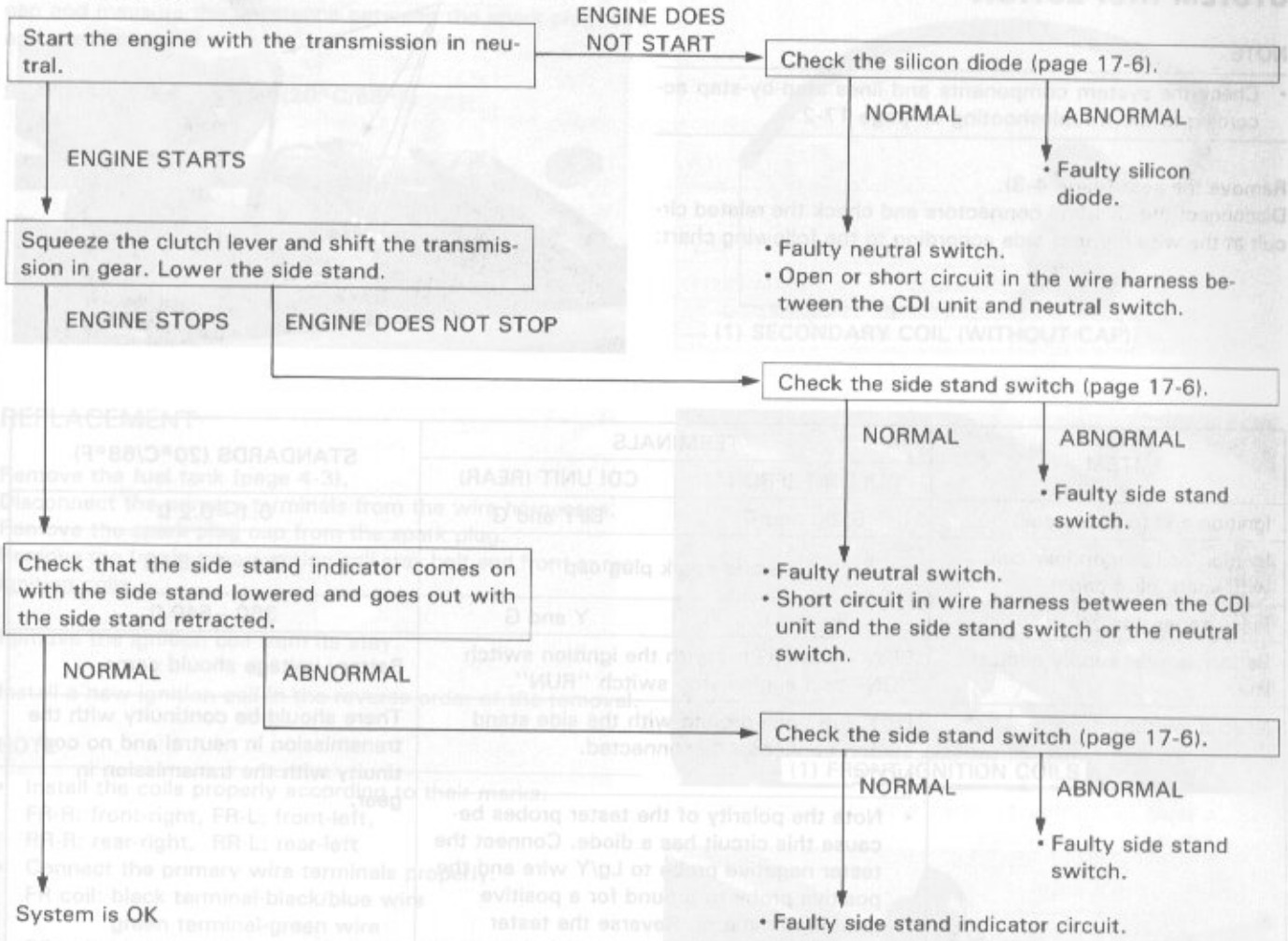

SYSTEM INSPECTION

NOTE

- Check the system components and lines step-by-step according to the troubleshooting on page 17-2.

Remove the seat (page 4-3).
Disconnect the CDI unit connectors and check the related circuit at the wire harness side according to the following chart:

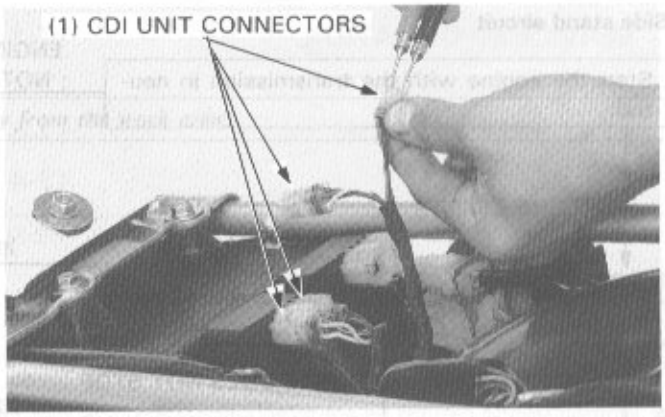

ITEM	TERMINALS		STANDARDS (20°C/68°F)
	CDI UNIT (FRONT)	CDI UNIT (REAR)	
Ignition coil (primary coil)	Bl/Bu and G	Bl/Y and G	0.1—0.2 Ω
Ignition coil (secondary coil) with spark plug cap	G and spark plug cap		7.4—10.8 kΩ
Pulse generator	Bu and G	Y and G	360—540 Ω
Battery power supply circuit line	Bl/W (+) and G (—) with the ignition switch "ON" and engine stop switch "RUN".		Battery voltage should come.
Neutral switch	Lg/Y and body ground with the side stand switch connector disconnected. NOTE • Note the polarity of the tester probes because this circuit has a diode. Connect the tester negative probe to Lg/Y wire and the positive probe to ground for a positive ground ohmmeter. Reverse the tester probes when a negative ground ohmmeter is used.		There should be continuity with the transmission in neutral and no continuity with the transmission in gear.
Side stand switch	Lg/Y and body ground with the side stand diode removed.		There should be continuity with the side stand retracted and no continuity with the side stand lowered.

IGNITION COIL

INSPECTION

Remove the fuel tank (page 4-3).
Measure the primary coil resistance by checking the primary terminals.

STANDARD: 0.1—0.2 Ω (20°C/68°F)

Measure the secondary coil resistance with the spark plug cap in place by checking the plug cap and green terminal.

STANDARD: 7.4—10.8 kΩ (20°C/68°F)

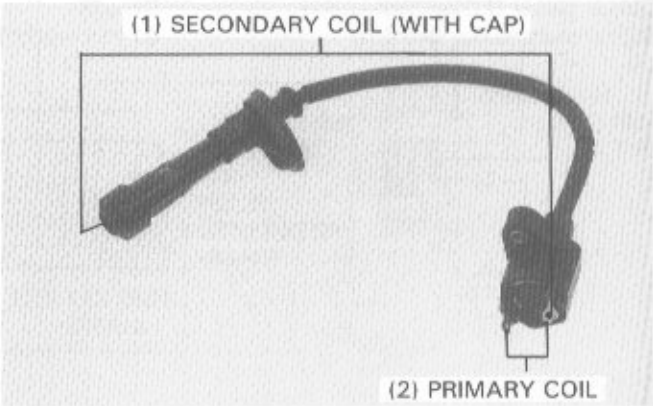

If the resistance is out of specification, remove the spark plug cap and measure the resistance between the spark plug wire and green terminal.

STANDARD: 3.6—4.5 kΩ (20°C/68°F)

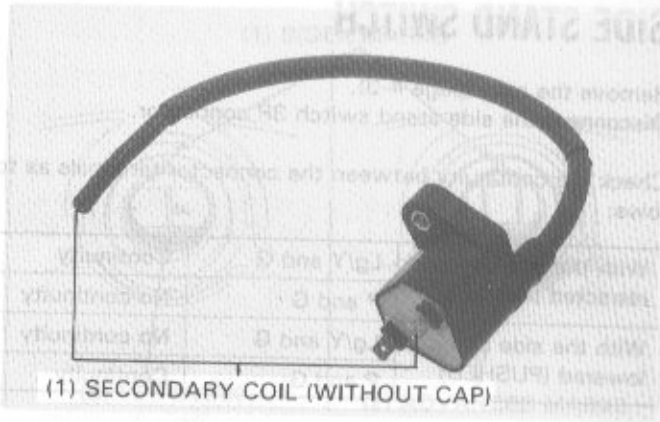
(1) SECONDARY COIL (WITHOUT CAP)

REPLACEMENT

Remove the fuel tank (page 4-3).
Disconnect the primary terminals from the wire harnesses.
Remove the spark plug cap from the spark plug.
Remove the front or rear ignition coil stay bolt and front or rear ignition coils.

Remove the ignition coil from its stay.

Install a new ignition coil in the reverse order of the removal.

NOTE

- Install the coils properly according to their marks.
  FR-R: front-right, FR-L: front-left,
  RR-R: rear-right, RR-L: rear-left
- Connect the primary wire terminals properly.
  FR coil: black terminal-black/blue wire
  green terminal-green wire
  RR coil: black terminal-black/yellow wire
  green terminal-green wire

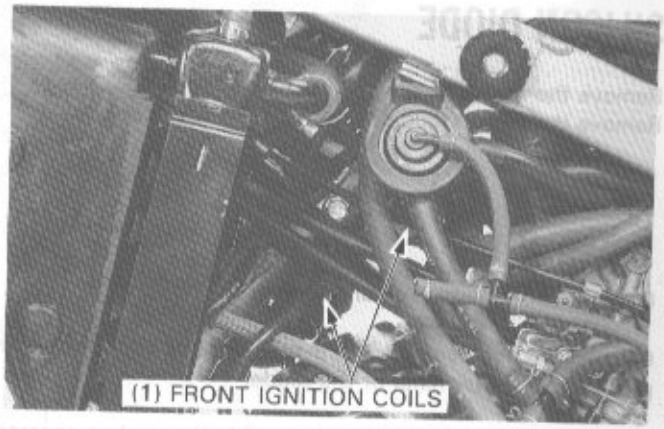
(1) FRONT IGNITION COILS

(1) REAR IGNITION COILS

PULSE GENERATOR

INSPECTION

NOTE

- It is not necessary to remove the pulse generator to make this inspection.

Remove the fuel tank (page 4-3).
Disconnect the pulse generator 4P mini connector.
Measure the resistance between the yellow and white with yellow tube wires for the rear pulse generator, and between the blue and white with blue tube wires for the front one.

STANDARD: 360—540 Ω (20°C/68°F)

For the replacement, refer to section 7.

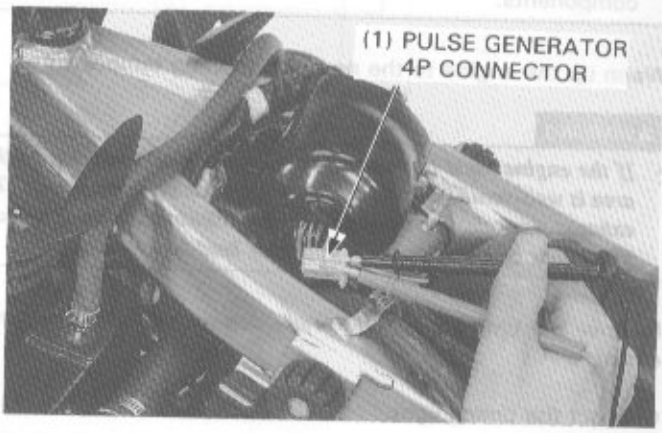

SIDE STAND SWITCH

Remove the seat (page 4-3).
Disconnect the side stand switch 3P connector.

Check the continuity between the connector terminals as follows:

With the side stand retracted (RELASED)	Lg/Y and G	Continuity
	P and G	No continuity
With the side stand lowered (PUSHED)	Lg/Y and G	No continuity
	P and G	Continuity

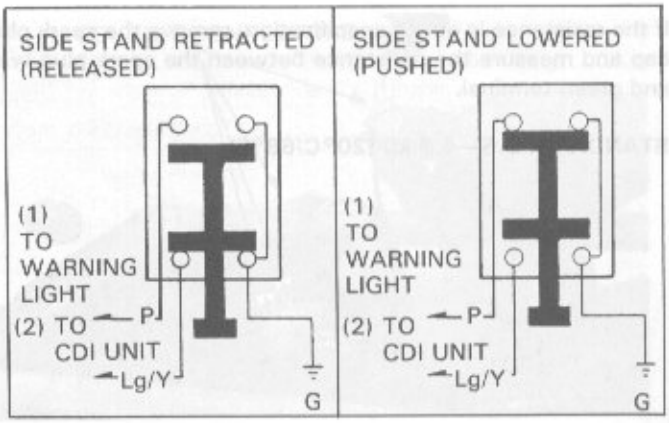

SILICON DIODE

Remove the fuel tank (page 4-3).
Remove the silicon diode from the main wire harness.

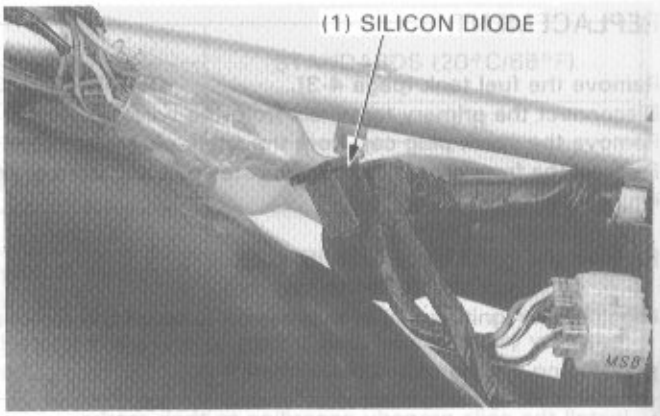

Check for continuity with an ohmmeter.

Connect the positive probe to the ⊕ terminal and the negative probe to the ⊖ terminal of the diode.

There should be continuity, then with the probes reversed, there should be no continuity.

NOTE

- The test results shown are for a positive ground ohmmeter and the opposite results will be obtained when a negative ground ohmmeter is used.

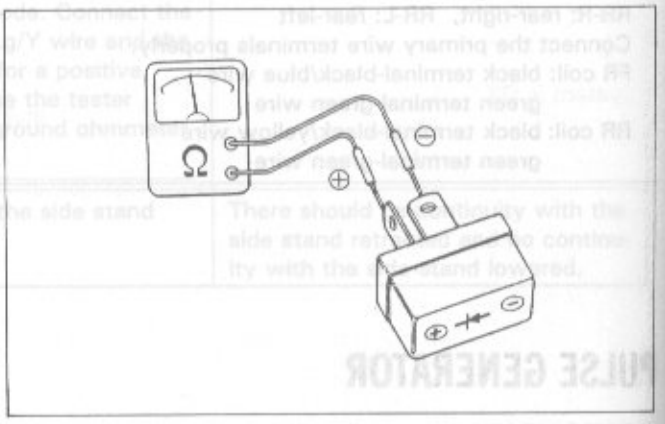

IGNITION TIMING

NOTE

- The Capacitive Discharge Ignition (CDI) system is factory pre-set and cannot be adjusted. Ignition timing inspection procedures are given to inspect the function of the CDI components.

Warm up the engine to the normal operating temperature.

⚠WARNING

- ***If the engine must be running to do some work, make sure the area is well-ventilated. Never run the engine in an enclosed. The exhaust contains poisonous carbon monoxide gas that can cause loss of consciousness and may lead to death.***

Remove the timing inspection hole cap on the left crankcase cover.

Connect the timing light.

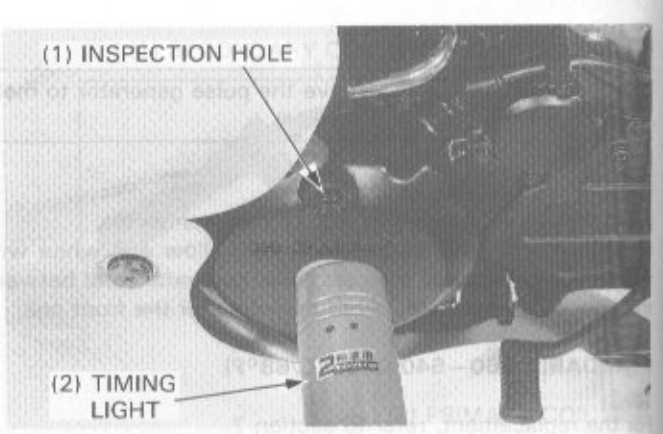

The timing is correct if the "F" mark aligns with the index mark on the left crankcase cover at 1,300 ± 100 rpm for each cylinder.

Raise the engine speed to 4,500 rpm.
The index mark should be between the advanced marks for each cylinder.

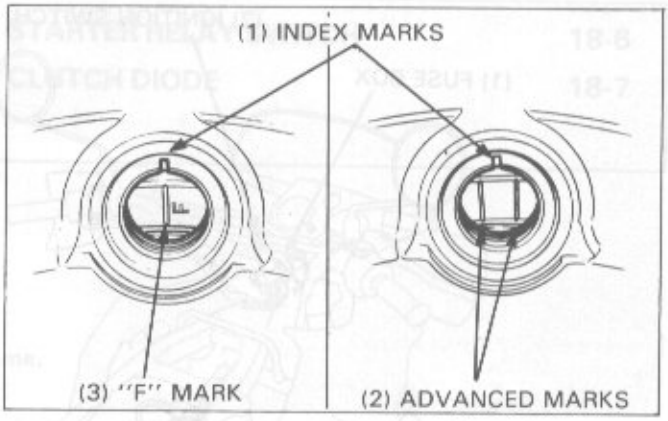

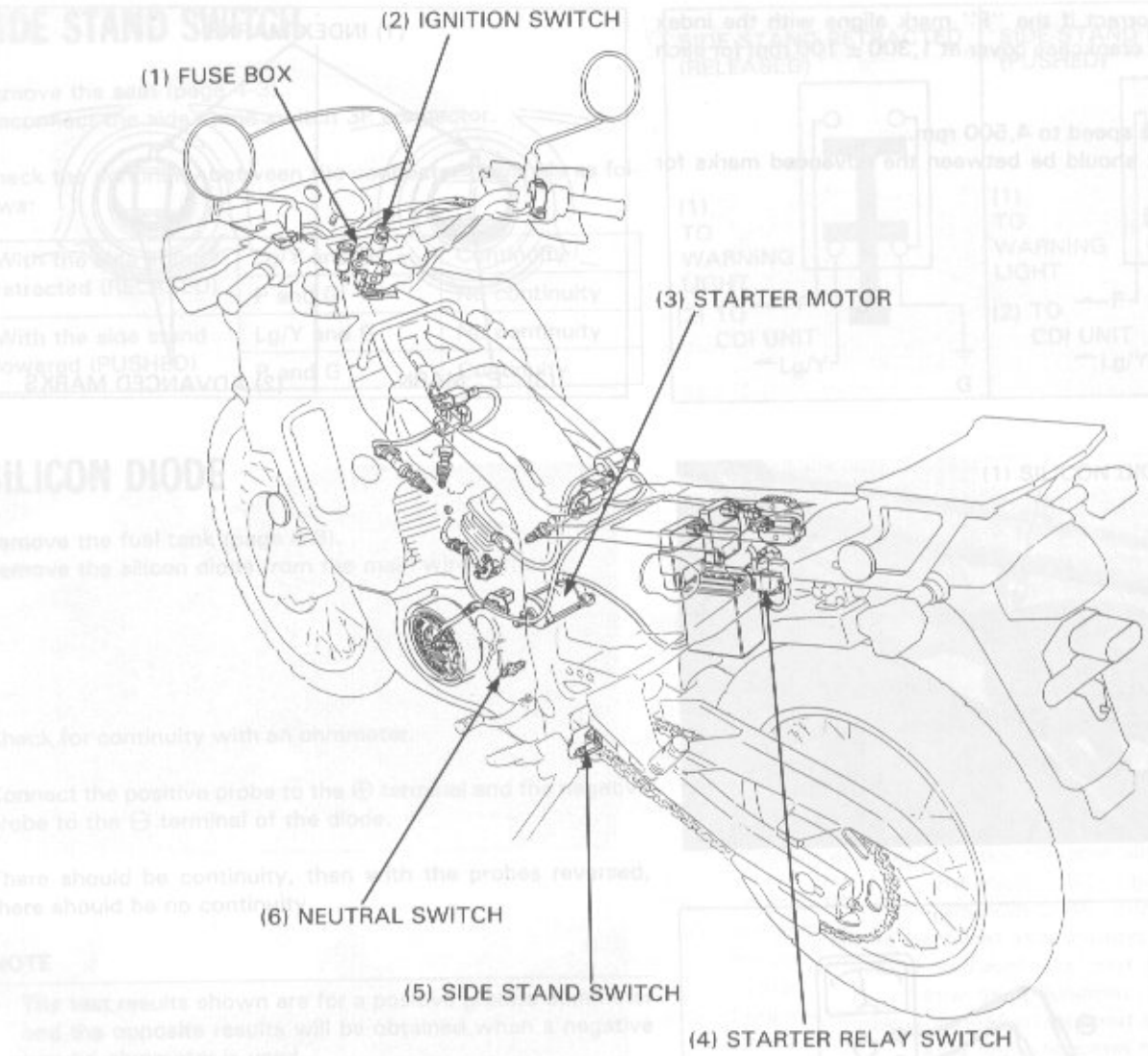
(2) IGNITION SWITCH
(1) FUSE BOX
(3) STARTER MOTOR
(6) NEUTRAL SWITCH
(5) SIDE STAND SWITCH
(4) STARTER RELAY SWITCH

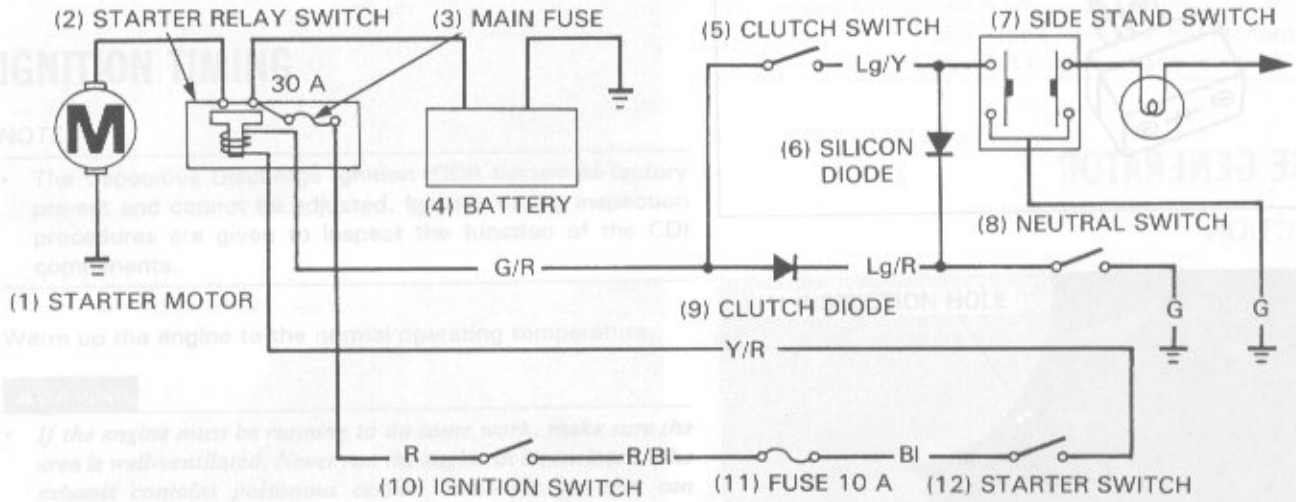
(2) STARTER RELAY SWITCH
(3) MAIN FUSE
30 A
M
(1) STARTER MOTOR
(4) BATTERY
(5) CLUTCH SWITCH
Lg/Y
(7) SIDE STAND SWITCH
(6) SILICON DIODE
(8) NEUTRAL SWITCH
G/R
Lg/R
(9) CLUTCH DIODE
G
G
Y/R
R
R/Bl
Bl
(10) IGNITION SWITCH
(11) FUSE 10 A
(12) STARTER SWITCH

18. ELECTRIC STARTER

SERVICE INFORMATION	18-1	STARTER RELAY SWITCH	18-6
TROUBLESHOOTING	18-2	CLUTCH DIODE	18-7
STARTER MOTOR	18-3		

SERVICE INFORMATION

GENERAL

- The starter motor can be removed with the engine in the frame.

SPECIFICATIONS

mm (in)

ITEM	STANDARD	SERVICE LIMIT
Starter motor brush length	12.0–13.0 (0.47–0.51)	6.5 (0.26)

TROUBLESHOOTING

NOTE

- The starter motor can turn when the transmition is in the neutral position or when the clutch lever is pulled in and the transmission is in gear with the side stand UP.
- Check for the followings before troubleshooting the system.
  - Blown main 30 A or sub 10 A fuses.
  - Loose battery and starter motor cables.
  - Discharged battery.

Starter motor does not turn

1-1. Check the starter relay switch for operation. You should hear the relay "CLICK" when the starter switch button is depressed (page 18-6).

"CLICK" HEARD → 1-2. Apply battery voltage to the starter motor directly and check the operation.

- TURNS
  - Loose connector
  - Faulty starter relay switch (page 18-6)
- DOES NOT TURN
  - Faulty starter motor (page 18-3)

"CLICK" NOT HEARD

2. Check the neutral indicator for function.

ABNORMAL
- Faulty neutral switch (page 8-6)
- Loose neutral switch connector
- Faulty ignition switch (page 19-5)
- Loose ignition switch connector
- Faulty side stand switch (page 17-6)
- Loose side stand switch connector
- Faulty clutch switch (page 19-9)
- Loose clutch switch connector
- Faulty starter switch (page 19-6)
- Loose starter switch connector

3. Check the starter relay switch voltage (page 18-7).

NO VOLTAGE
- Faulty clutch diode (page 18-7)
- Loose clutch diode connector
- Faulty silicon diode (page 17-6)
- Faulty starter relay switch (page 18-6)
- Open or short circuit in wire harness

BATTERY VOLTAGE COMES

4. Check the starter relay switch for continuity (page 18-7).

ABNORMAL
- Faulty starter relay switch

NORMAL
- Loose starter relay switch connector

STARTER MOTOR

REMOVAL

⚠ WARNING

- ***With the ignition switch OFF, remove the negative cable at the battery before servicing the starter motor.***

Disconnect the starter motor cable.
Remove the motor mounting bolts and motor.

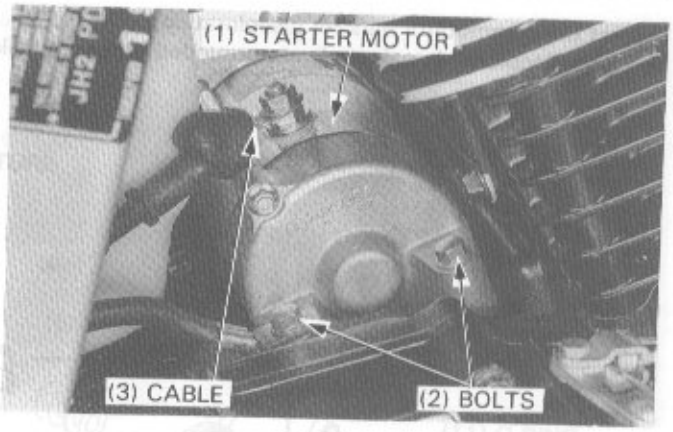

DISASSEMBLY

Remove the following components:
– Motor case bolts.
– Front cover and rear cover.
– Armature.

NOTE

- Record the location and number of shims.

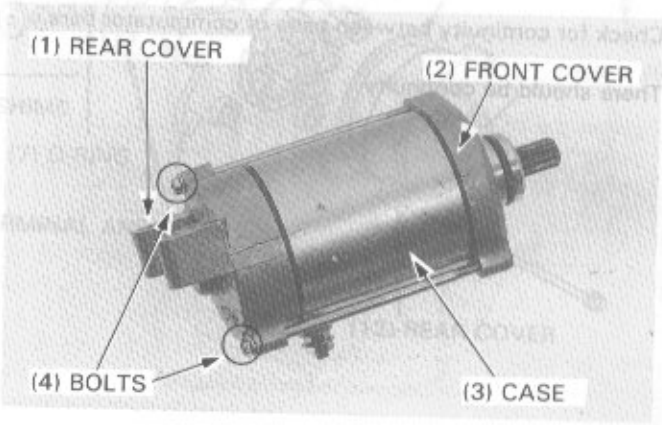

INSPECTION

Measure each brush length.

SERVICE LIMIT: 6.5 mm (0.26 in)

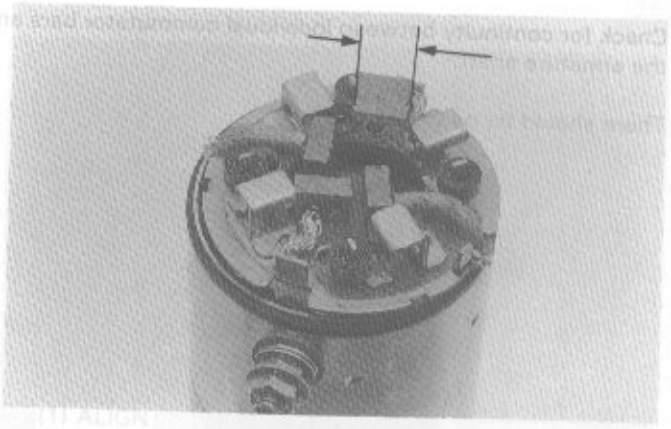

Check for continuity from the cable terminal to the motor case and from the cable terminal to the black brush wire.

CABLE TERMINAL—MOTOR CASE
NO CONTINUITY: NORMAL

CABLE TERMINAL—BLACK BRUSH WIRE
CONTINUITY: NORMAL

Disassemble them if necessary.

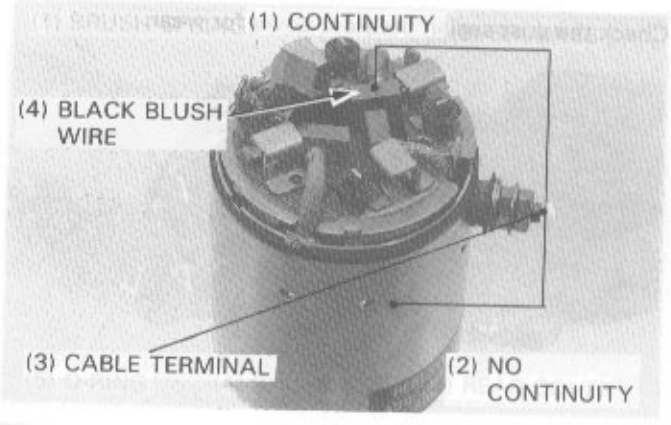

Inspect the commutator bars for discoloration.
The bars discolored in pairs indicate grounded armature coils.

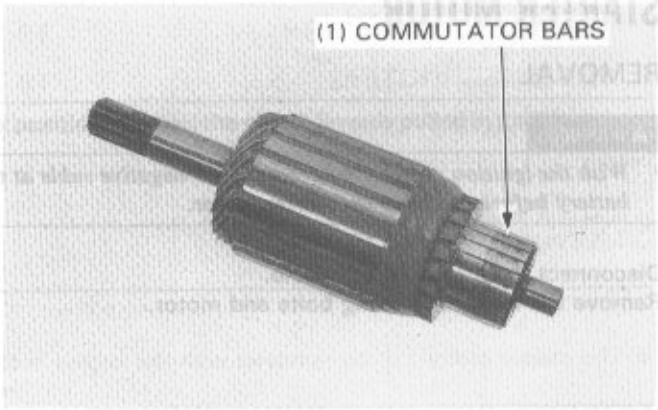

Check for continuity between pairs of commutator bars.

There should be continuity.

Check for continuity between individual commutator bars and the armature shaft.

There should be no continuity.

Check the dust seal in the front cover for wear.

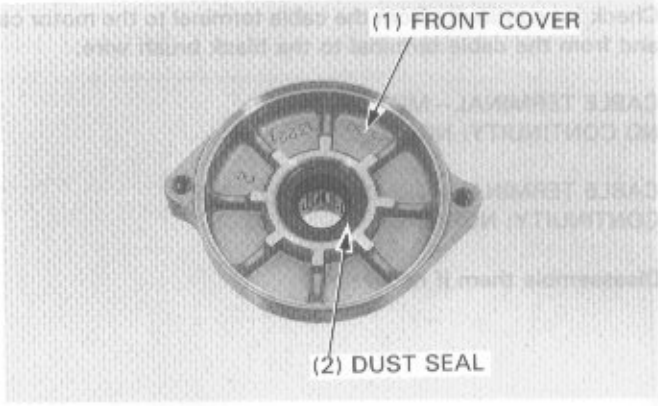

ASSEMBLY

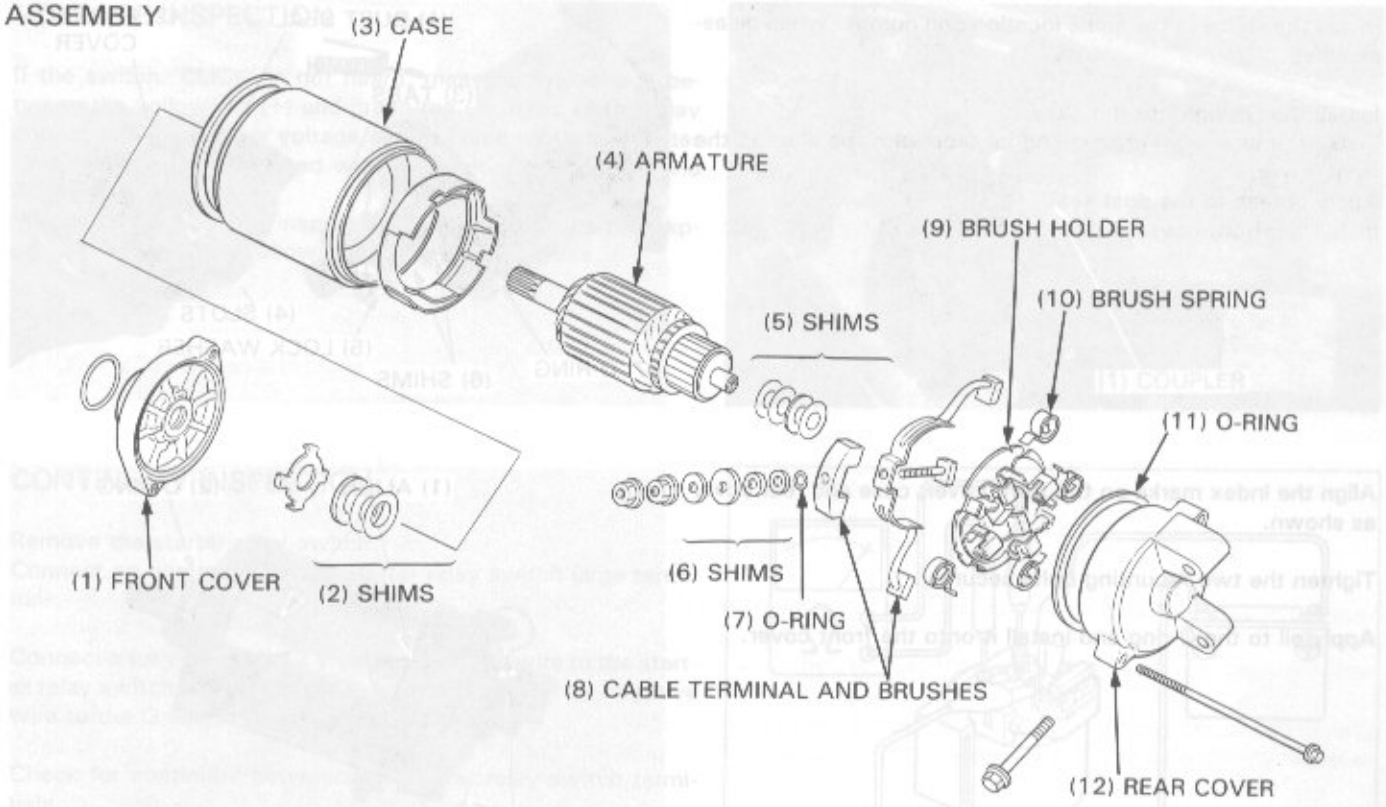

Align the starter motor case notch with the brush holder tab.

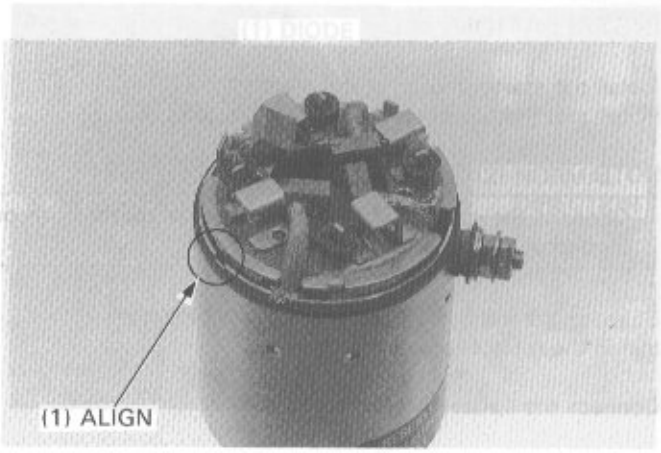

Set the brushes on the brush holder.
Install the armature into the case.
Set the brush springs.

Install the shims in the same location and number when disassembled.
Install the O-ring onto the case.
Install the rear cover, aligning its slot with the brush holder pin.

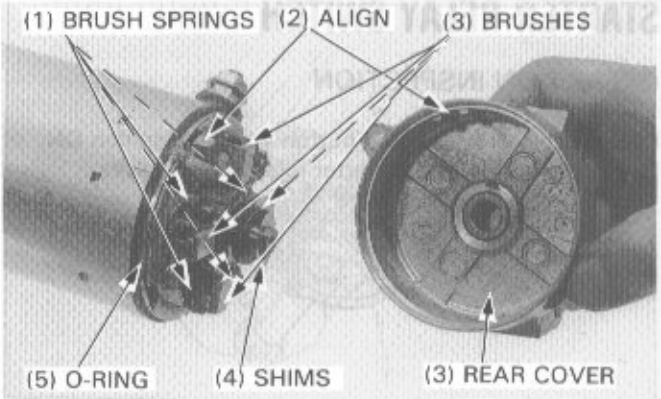

Install the shims in the same location and number when disassembled.

Install the O-ring onto the case.
Install the lock washer, aligning its tabs with the slots in the front cover.
Apply grease to the dust seal.
Install the front cover.

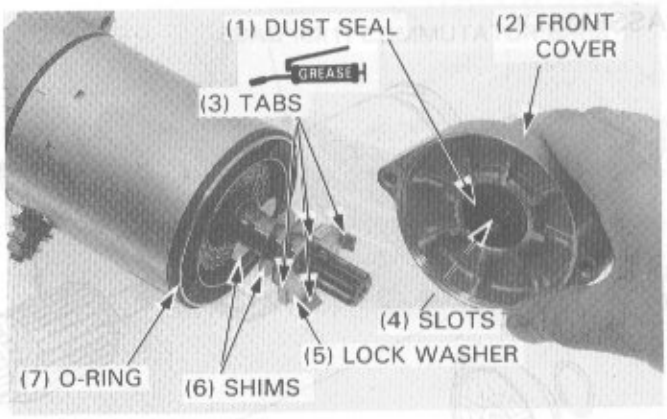

Align the index marks on the front cover, case and rear cover as shown.

Tighten the two mounting bolts securely.

Apply oil to the O-ring and install it onto the front cover.

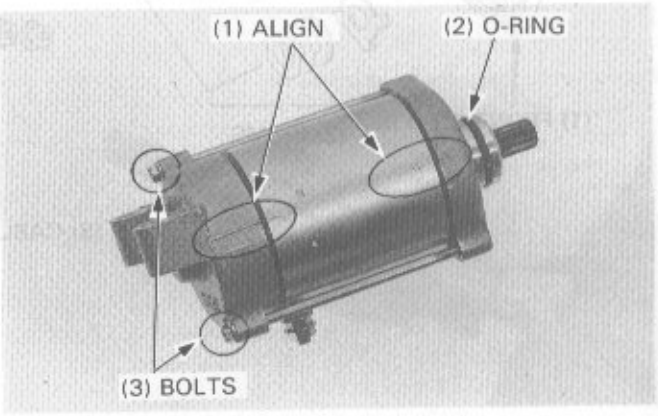

INSTALLATION

Install the starter motor to the engine.
Install and tighten the motor mounting bolts securely.

NOTE

- Connect the ground cable to the starter motor with one mounting bolt as shown.

Connect the motor cable to the motor terminal.
Install the rubber cap to the terminal.

Connect the battery negative cable.

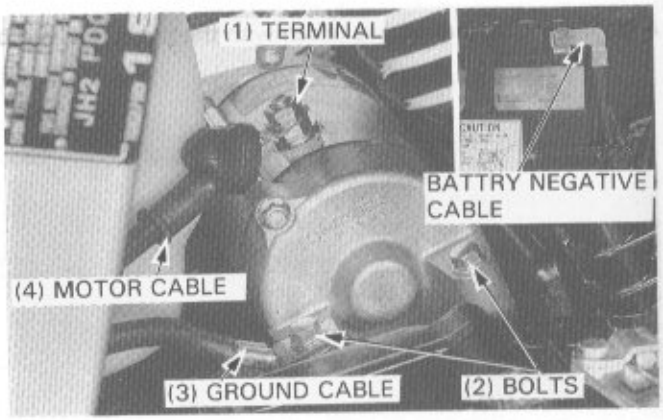

STARTER RELAY SWITCH

OPERATION INSPECTION

Depress the starter switch button with the ignition ON.
The coil is normal if the starter relay switch clicks.

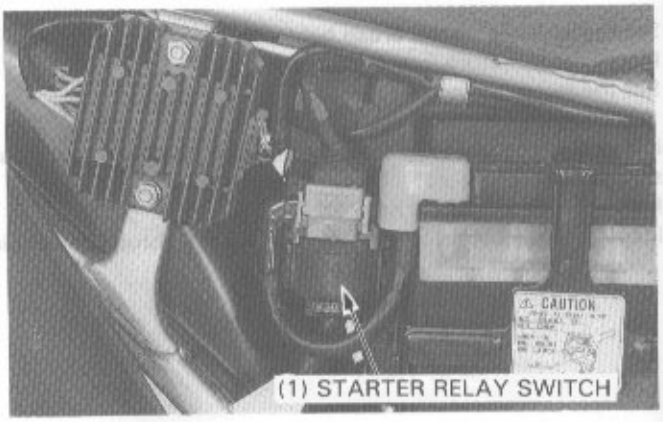

VOLTAGE INSPECTION

If the switch 'CLICK' is not heard, measure the voltage between the yellow/red (+) and green/red (−) wires of the relay connector. The battery voltage should come when the starter switch button is depressed with the ignition switch ON and neutral position.
Perform the following inspection if the battery voltage appeared between the yellow/red and green/red wires.

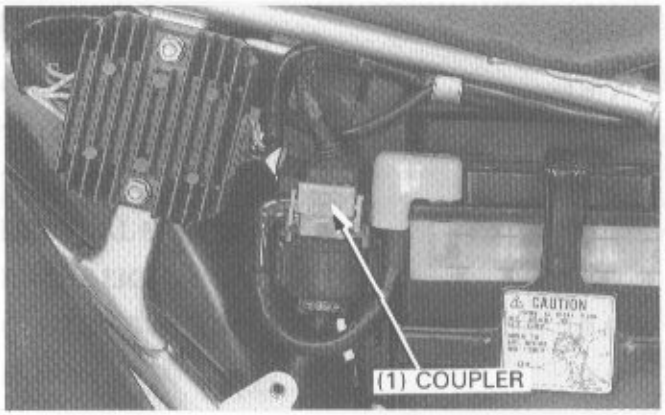

CONTINUITY INSPECTION

Remove the starter relay switch.
Connect an ohmmeter to the starter relay switch large terminals.

Connect a fully charged 12 V battery positive wire to the starter relay switch Yellow/Red wire terminal and battery negative wire to the Green/Red wire terminal.

Check for continuity between the starter relay switch terminals.

There should be continuity while 12 V battery is connected to the starter relay switch terminals and should be no continuity when the battery is disconnected.

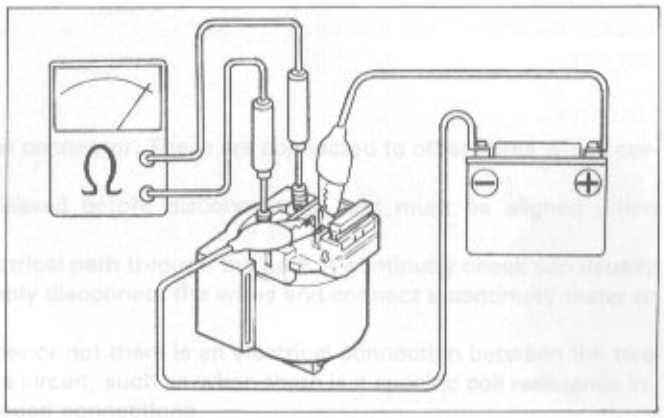

CLUTCH DIODE

NOTE

- Clutch diode is located in the fuse box.

INSPECTION

Check for continuity with an ohmmeter at the connector.

NORMAL DIRECTION: CONTINUITY
REVERSE DIRECTION: NO CONTINUITY

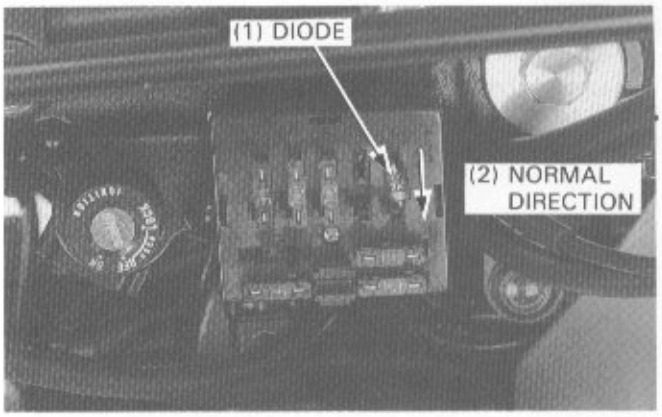

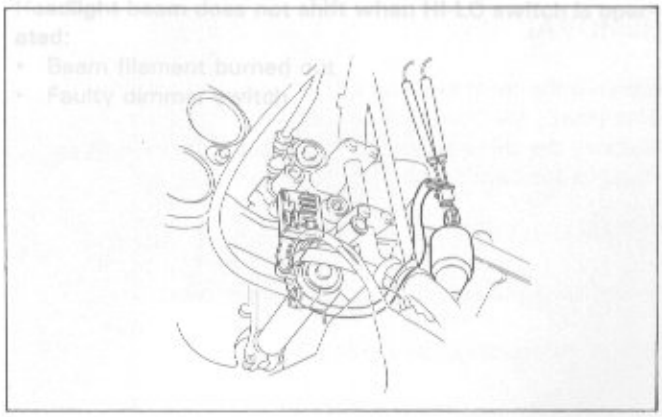

19. LIGHTS/INSTRUMENTS/SWITCHES

SERVICE INFORMATION	19-1	HANDLEBARS SWITCH	19-6
TROUBLESHOOTING	19-1	OIL PRESSURE SWITCH	19-7
HEADLIGHT	19-2	TEMPERATURE GAUGE	19-8
STOP & TAILLIGHT	19-3	TACHOMETER	19-8
LICENSE LIGHT	19-3	NEUTRAL SWITCH	19-8
TURN SIGNAL LIGHT	19-3	BRAKE LIGHT SWITCH	19-9
INSTRUMENTS	19-4	CLUTCH SWITCH	19-9
IGNITION SWITCH	19-5	HORN	19-9

SERVICE INFORMATION

GENERAL

- Some wires have different colored bands around them near the connector. These are connected to other wires which correspond to the band color.
- All plastic connectors have locking tabs that must be released before disconnecting, and must be aligned when reconnecting.
- To isolate an electrical failure, check the continuity of the electrical path through the part. A continuity check can usually be made without removing the part from the motorcycle. Simply disconnect the wires and connect a continuity tester or volt-ohmmeter to the terminals or connections.
- A continuity tester is useful when checking to find out whether or not there is an electrical connection between the two points. An ohmmeter is needed to measure the resistance of a circuit, such as when there is a specific coil resistance involved, or when checking for high resistance caused by corroded connections.
- For the inspection of the thermosensor and thermostatic switch, refer to section 5.

SPECIFICATION

Headlight		12 V 60/55 W
Turn signal light		12 V 32 cp x 4
Stop & taillight		12 V 32/2 cp
License light		12 V 4 cp
Meter light		12 V 1.7 W x 3
Indicator light	Neutral	12 V 3.4 W
	High beam	12 V 1.7 W
	Turn signal	12 V 3.4 W x 2
	Oil warning	12 V 3.4 W

TROUBLESHOOTING

No lights come on when ignition switch is turned ON:
- Bulb at fault or burned out
- Faulty switch
- Wiring to that component has open circuit
- Fuse blown
- Wiring loose, broken, or at fault
- Battery dead or disconnected

All lights come on, but dimly, when ignition switch is turned ON:
- Battery voltage low
- Wiring or switch has excessive resistance

Headlight beam does not shift when HI-LO switch is operated:
- Beam filament burned out
- Faulty dimmer switch

HEADLIGHT

BULB REPLACEMENT

Remove the right upper cover (page 12-2).

Disconnect the headlight connector and remove the dust cover.

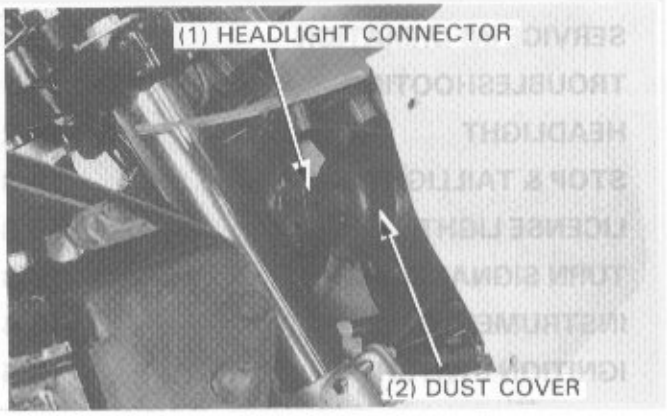

Release the retainer clip and replace the headlight bulb with a new one.

CAUTION

- *Wear a glove when installing the halogen bulb. If you touch the bulb with your bare hands, clean it with a cloth moistened with alcohol to prevent its early failure.*

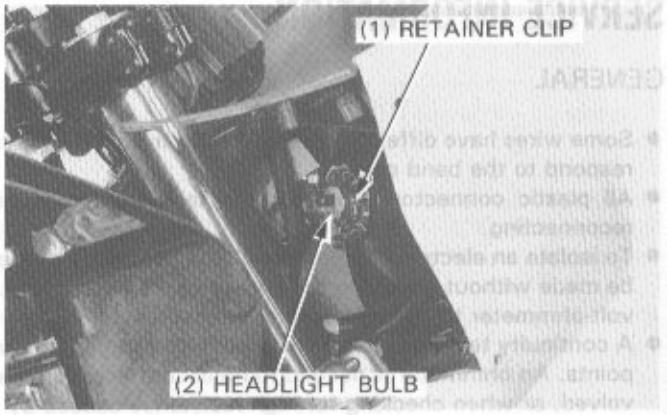

Install the dust cover with its TOP mark facing up.

Connect the headlight connector securely.
Install the right upper cover (page 12-2).

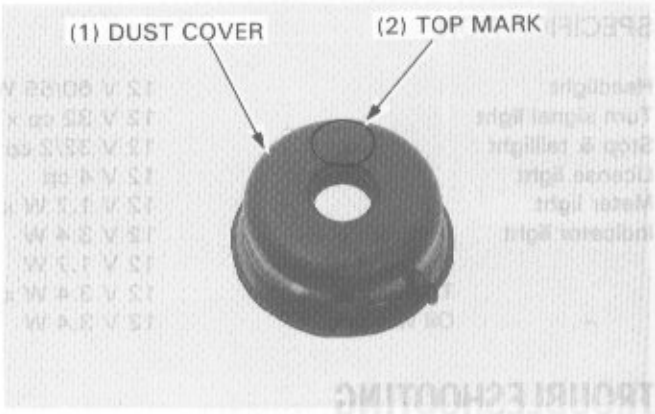

REMOVAL

Remove the front cowling (page 12-2).
Disconnect the headlight connector.
Remove the three screws and headlight case holder.
Remove the headlight.

INSTALLATION

Install the headlight case in the reverse order of removal.

Adjust the headlight aim (page 3-14).

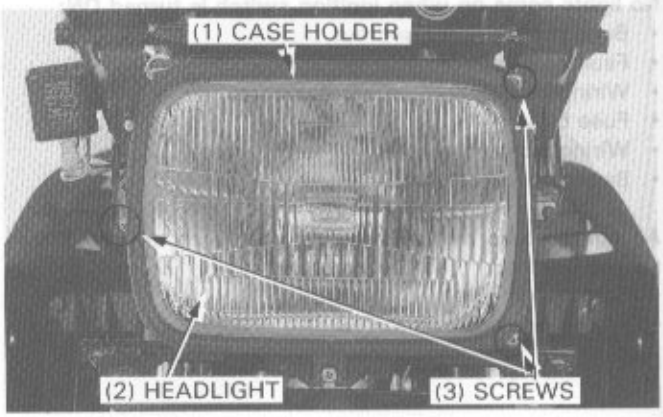

HEADLIGHT

BULB REPLACEMENT

Remove the right upper cover (page 12-2).

Disconnect the headlight connector and remove the dust cover.

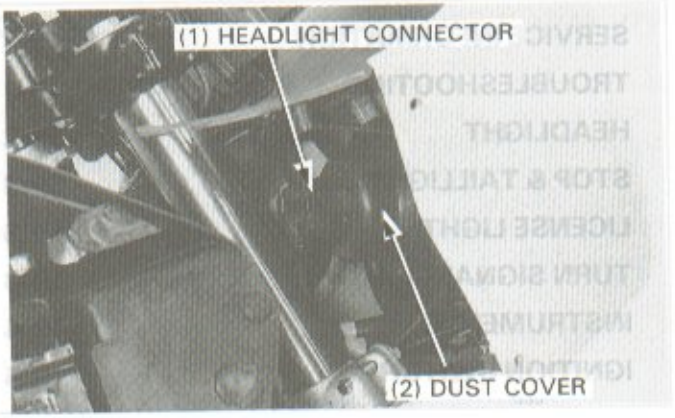

Release the retainer clip and replace the headlight bulb with a new one.

CAUTION

- *Wear a glove when installing the halogen bulb. If you touch the bulb with your bare hands, clean it with a cloth moistened with alcohol to prevent its early failure.*

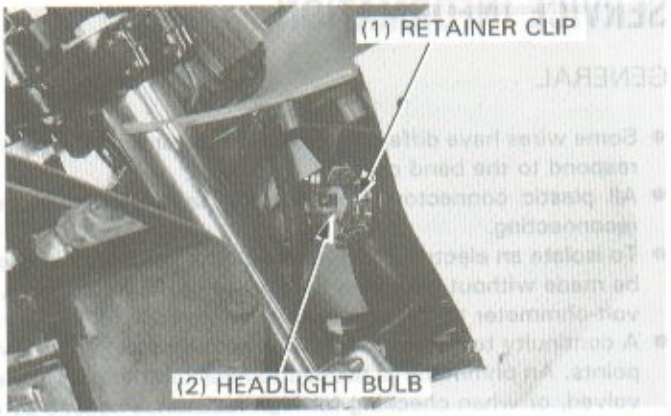

Install the dust cover with its TOP mark facing up.

Connect the headlight connector securely.
Install the right upper cover (page 12-2).

REMOVAL

Remove the front cowling (page 12-2).
Disconnect the headlight connector.
Remove the three screws and headlight case holder.
Remove the headlight.

INSTALLATION

Install the headlight case in the reverse order of removal.

Adjust the headlight aim (page 3-14).

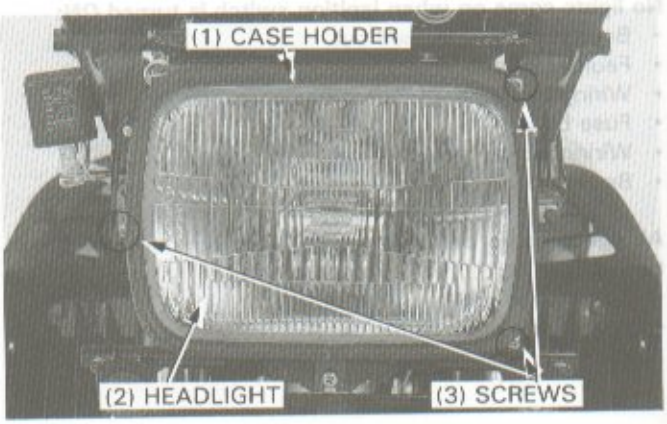

STOP & TAILLIGHT

BULB REPLACEMENT

Remove the stop & taillight lens by removing the two screws.
Remove the bulb by pushing it in and turning it counterclockwise.
Install a new bulb in the reverse order of removal.

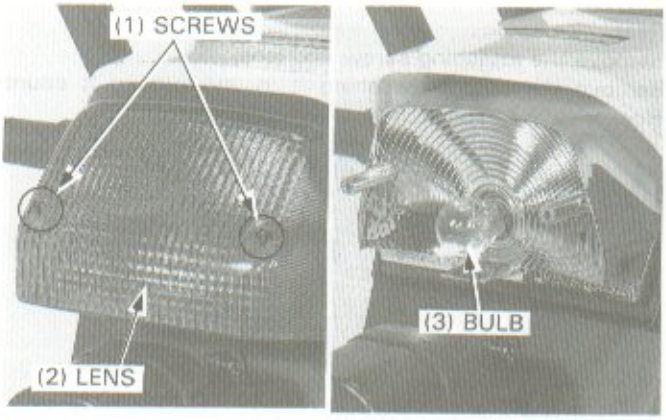

LICENSE LIGHT

BULB REPLACEMENT

Remove the two bolts and the license light from the rear mudguard.
Remove the two screws and the license light lens.

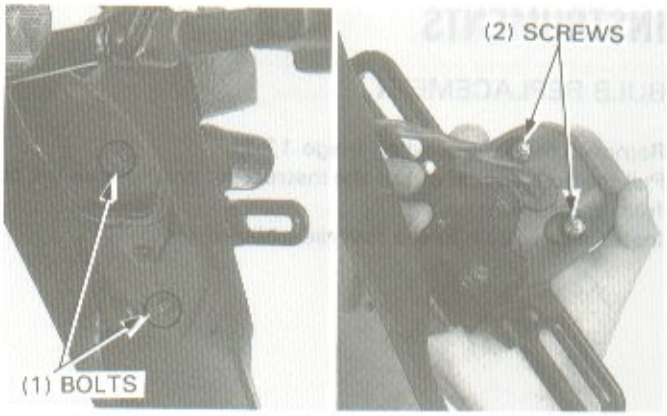

Remove the bulb by pushing it in and turning it counterclockwise.
Install a new bulb in the reverse order of removal.

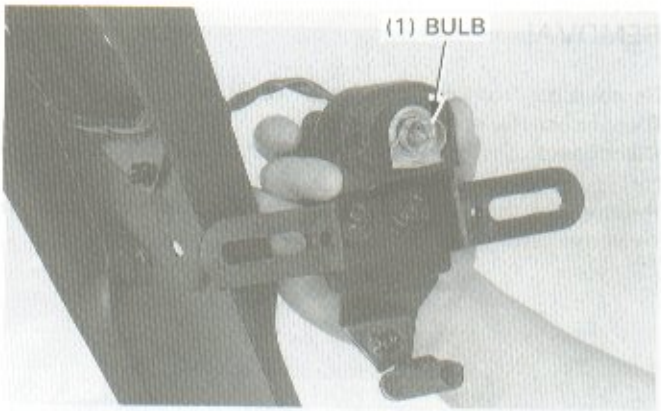

TURN SIGNAL LIGHT

BULB REPLACEMENT

Front
Remove the side cowling (page 12-2).
Turn the bulb socket counterclockwise and pull it out.
Remove the bulb and replace it with a new one.

Install the removed parts in the reverse order of removal.

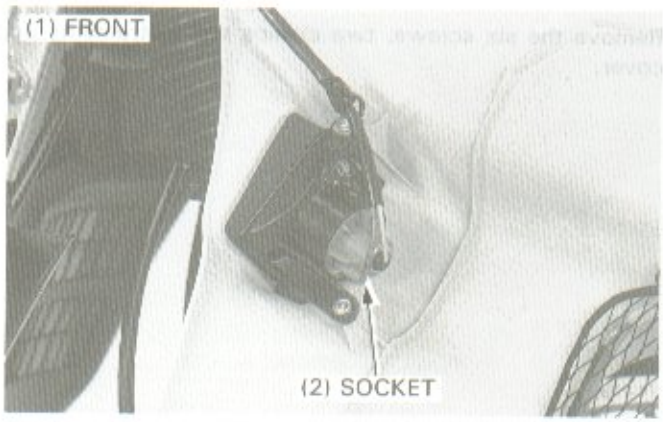

Rear
Remove the attaching screw and lens.
Remove the bulb by pushing it in and turning it counterclockwise and replace it with a new one.

Install the lens and tighten the screw securely.

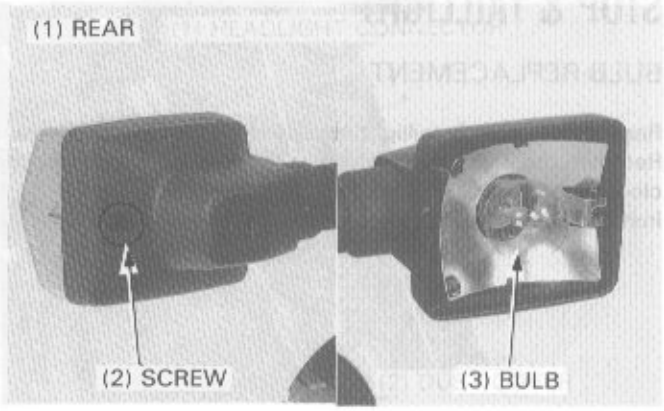

INSTRUMENTS

BULB REPLACEMENT

Remove the front cowling (page 12-2).
Pull the bulb socket out of the instrument and remove the bulb from the socket.
Install a new bulb in the reverse order of removal.

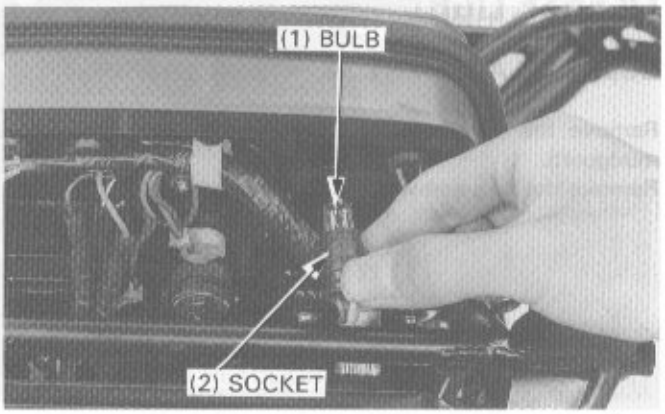

REMOVAL

Remove the front cowling (page 12-2).
Disconnect the speedometer cable.
Disconnect the 9P connector and black/yellow wire connector.
Remove the three instruments mounting nuts and instruments from the setting stay.

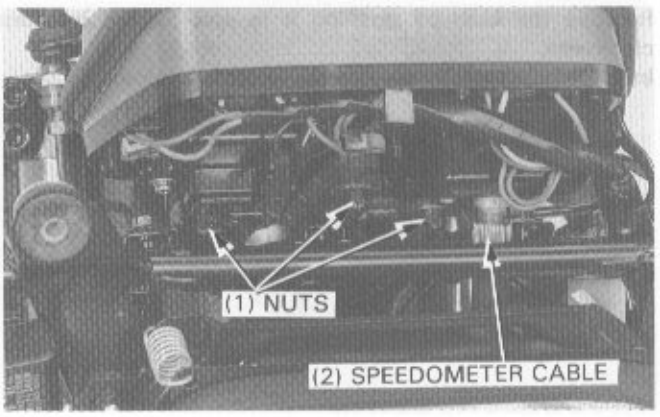

Remove the six screws, two clamps and instruments upper cover.

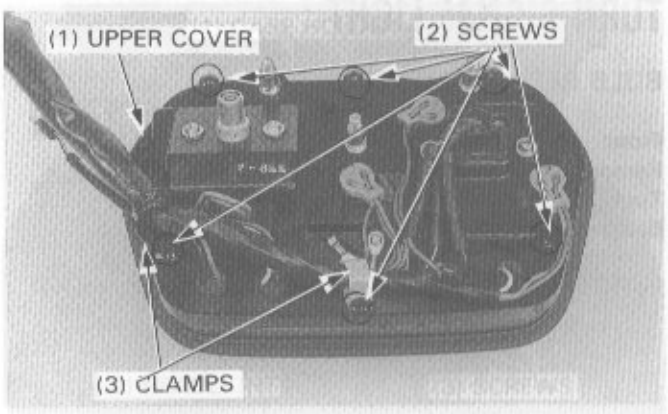

Remove the following screws, connectors and components:

TACHOMETER
— Three connectors and four screws.

TEMPERATURE GAUGE
— Three screws.

SPEEDOMETER
— Two screws.

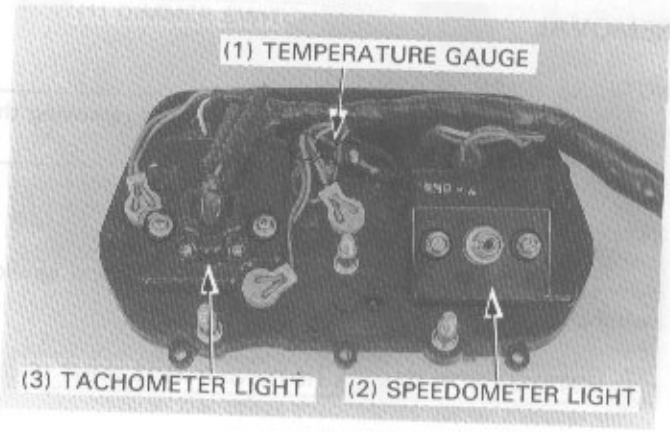

INSTALLATION

Install the instruments in the reverse order of removal.

NOTE

- Install the temperature gauge wires with screws according to the support on the lower cover.
- Route the wire properly (page 1-9).

IGNITION SWITCH

INSPECTION

Remove the right upper cover (page 12-2).
Disconnect the ignition switch red 4P connector.

Check for continuity between the ignition switch connector terminals in each switch position.

Continuity should exsist between the color coded wires in the chart below.

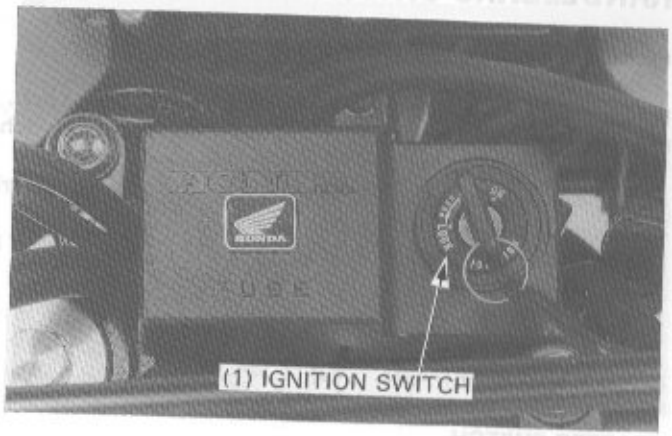

TERMINAL	BAT1	BAT2	FAN
ON	O	O	O
OFF			
LOCK			
COLOR	R	R/Bl	Bu/O

REMOVAL

NOTE

- You can remove the ignition switch without removing the front cowling.

Remove the left upper cover (page 12-2).
Disconnect the ignition switch connector.
Remove the two ignition switch mounting bolts and ignition switch.

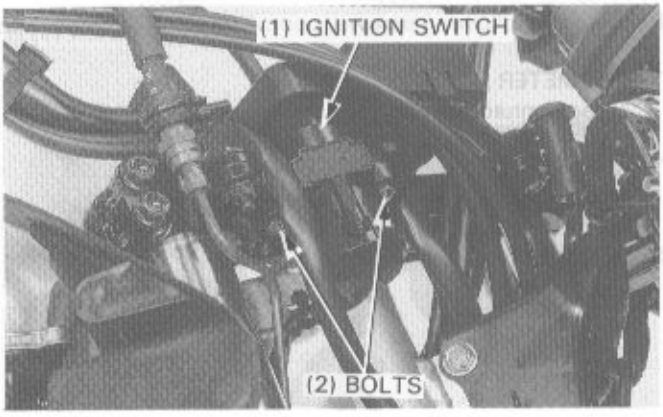

Remove the wire clamp.
Remove the three screws, push the lugs in the slots and pull the contact base out of the cylinder.

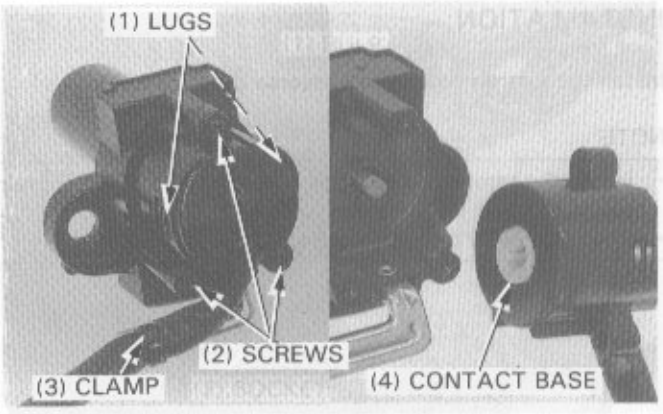

INSTALLATION

Install the ignition switch in the reverse order of removal.

HANDLEBARS SWITCH

Remove the right upper cover (page 12-2).

Disconnect the 6P connector of the left handlebars switch.
Disconnect the 9P connector of the right handlebars switch.

Check the components of the handlebars switches for electric continuity as follows.
Continuity should exsist between the color coded wires in each chart below.

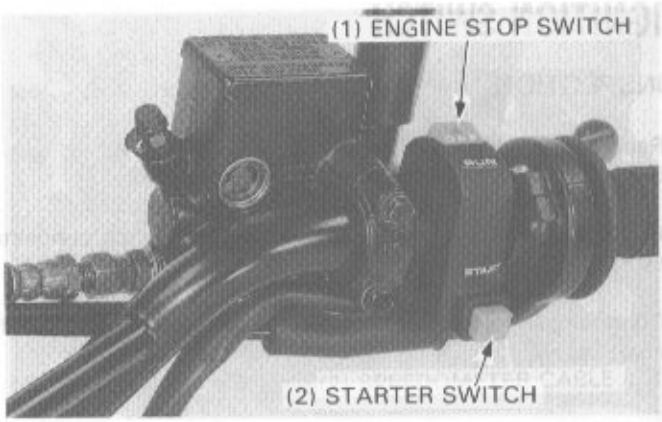

RIGHT HANDLEBARS SWITCH

STARTER SWITCH

TERMINAL	BAT4	ST	HL
FREE	O		O
PUSH	O	O	
COLOR	W/G	Y/R	Bu/W

ENGINE STOP SWITCH

TERMINAL	BAT3	IG
OFF		
RUN	O	O
COLOR	Bl/R	Bl/W

LEFT HANDLEBARS SWITCH

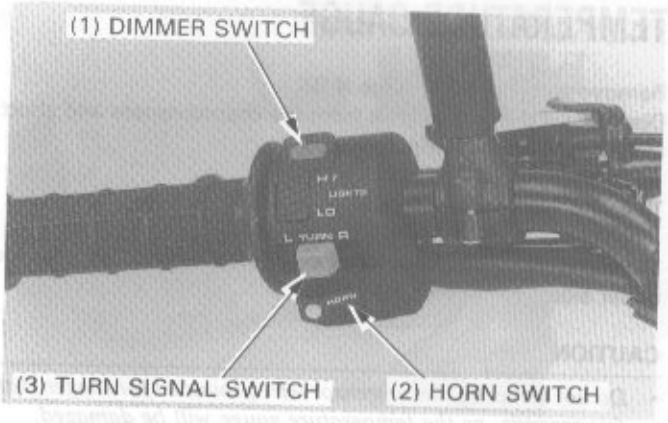

DIMMER SWITCH

TERMINAL	HL	Lo	Hi
Lo	○	○	
(N)	○	○	○
Hi	○		○
COLOR	Bu/W	W	Bu

TURN SIGNAL SWITCH

TERMINAL	W	R	L
R	○	○	
N			
L	○		○
COLOR	Gr	Lb	O

HORN SWITCH

TERMINAL	Ho	BAT6
FREE		
PUSH	○	○
COLOR	Lg	Bl

OIL PRESSURE SWITCH

Make sure that the oil warning light comes on with the ignition switch "ON".

If the light does not come on, inspect as follows.
Remove the drive sprocket cover.
Disconnect the oil pressure switch wire from the switch by removing the terminal screw.
Short it to ground using a jumper wire. Turn the ignition switch "ON".

The oil warning light should come on.
If the light does not come on, check the bulb, sub fuse (15 A) and wires for a loose connection or an open circuit.

Start the engine and make sure that the light goes off. If the light does not go off, check the oil pressure (page 2-4).
If the oil pressure is normal, replace the oil pressure switch with a new one (page 2-4).

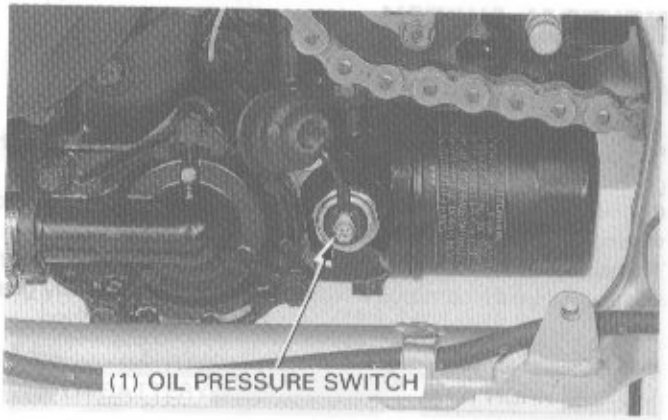

TEMPERATURE GAUGE

Remove the fuel tank (page 4-3).
Disconnect the sensor wire from the thermosensor and short it to ground using a jumper wire.

Turn the ignition switch ON.

Temperature gauge should move all the way to "H" mark on upper side.

CAUTION

- *Do not leave the thermosensor wire grounded for longer than a few seconds, or the temperature gauge will be damaged.*

If the gauge does not move, check the sub fuse (15 A) and wires for a loose connection or an open circuit; if normal, replace the gauge with a new one (page 19-5).

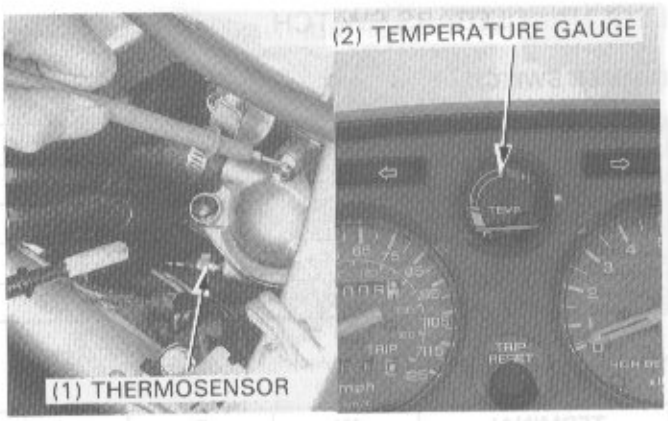

TACHOMETER

If the tachometer does not work properly, remove the front cowling (page 12-2) and turn the ignition switch ON. Check the voltage between the black (+) and green (−) wire connectors.
There should be battery voltage.
If the voltage does not come on, check the sub fuse (15 A) and wire for a loose connection or an open circuit.

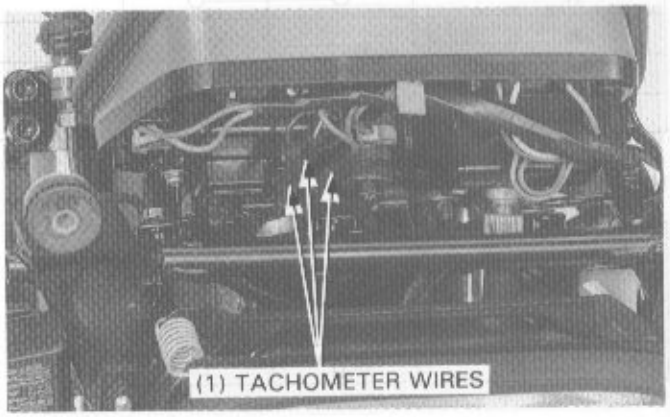

If there is good condition, check the black/yellow wire for open circuit between the tachometer and rear CDI unit.

If the problem still appears, replace the tachometer with a new one (page 19-5).

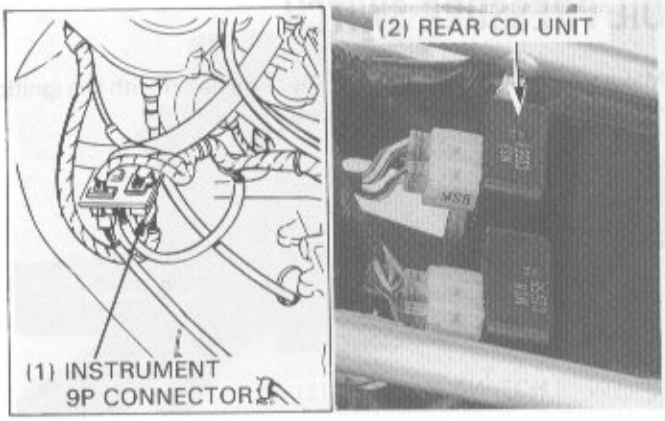

NEUTRAL SWITCH

INSPECTION

Remove the drive sprocket cover, and temporarily install the gearshift pedal.
Check the neutral switch for continuity between the switch teminal and body ground as shown.
There should be continuity when the transmission in neutral and should be no continuity with the transmission in any gear.

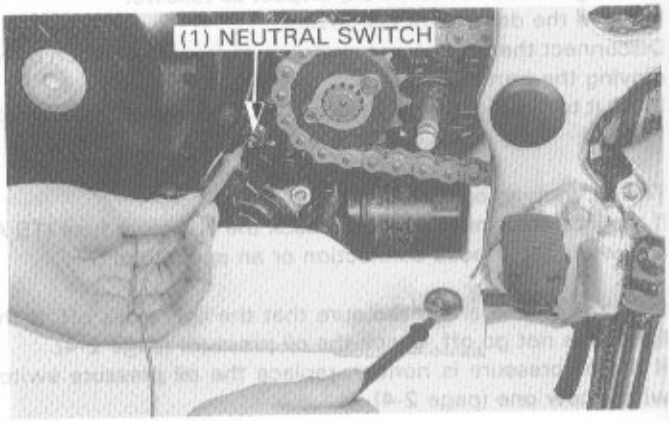

20. WIRING DIAGRAM

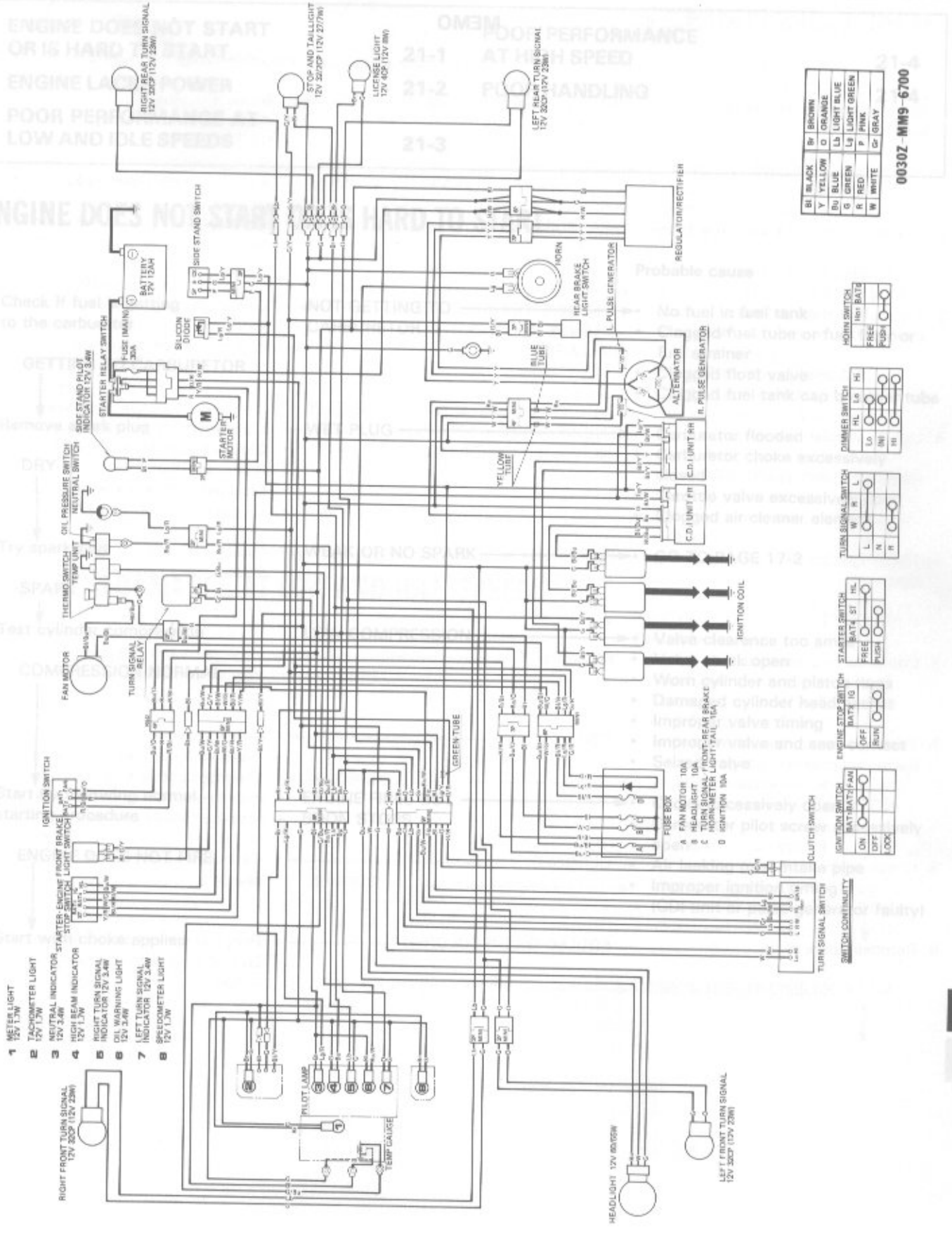

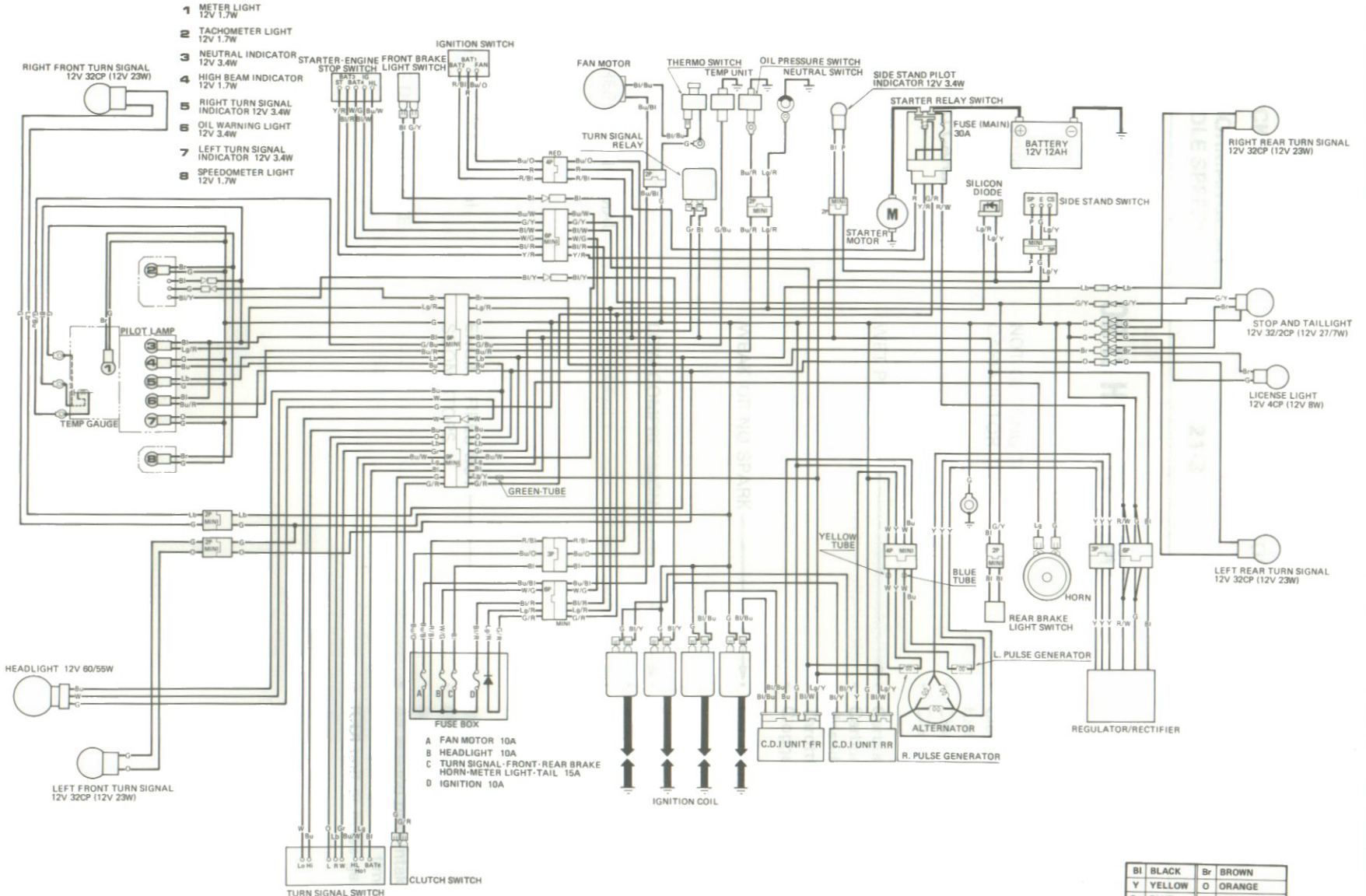

SWITCH CONTINUITY

IGNITION SWITCH

	BAT1	BAT2	FAN
ON	○	○	
OFF			
LOCK			

ENGINE STOP SWITCH

	BAT3	IG
OFF		
RUN	○	○

STARTER SWITCH

	BAT4	ST	HL
FREE	○		○
PUSH	○	○	○

TURN SIGNAL SWITCH

	W	R	L
L			○
N			
R	○		

DIMMER SWITCH

	HL	Lo	Hi
Lo		○	
(N)	○	○	
Hi	○		○

HORN SWITCH

	Ho1	BAT6
FREE		
PUSH	○	○

Bl	BLACK	Br	BROWN
Y	YELLOW	O	ORANGE
Bu	BLUE	Lb	LIGHT BLUE
G	GREEN	Lg	LIGHT GREEN
R	RED	P	PINK
W	WHITE	Gr	GRAY

0030Z-MM9-6700

ENGINE DOES NOT START OR IS HARD TO START	21-1	POOR PERFORMANCE AT HIGH SPEED	21-4
ENGINE LACKS POWER	21-2	POOR HANDLING	21-4
POOR PERFORMANCE AT LOW AND IDLE SPEEDS	21-3		

ENGINE DOES NOT START OR IS HARD TO START

		Probable cause
1. Check if fuel is getting to the carburetor	NOT GETTING TO CARBURETOR →	• No fuel in fuel tank • Clogged fuel tube or fuel filter or fuel strainer • Clogged float valve • Clogged fuel tank cap breather tube
GETTING TO CARBURETOR ↓		
2. Remove spark plug	WET PLUG →	• Carburetor flooded • Carburetor choke excessively closed • Throttle valve excessively open • Clogged air cleaner element
DRY ↓		
3. Try spark test	WEAK OR NO SPARK →	• GO TO PAGE 17-2
SPARK ↓		
4. Test cylinder compression	LOW COMPRESSION →	• Valve clearance too small • Valve stuck open • Worn cylinder and piston rings • Damaged cylinder head gasket • Improper valve timing • Improper valve and seat contact • Seized valve
COMPRESSION NORMAL ↓		
5. Start by following normal starting procedure	ENGINE FIRES BUT SOON STOPS →	• Choke excessively open • Carburetor pilot screw excessively open • Air leaking past intake pipe • Improper ignition timing (CDI unit or pulse generator faulty)
ENGINE DOES NOT FIRE ↓		
6. Start with choke applied		

ENGINE LACKS POWER

		Probable cause
1. Raise wheel off ground and spin by hand	WHEEL DOES NOT SPIN FREELY →	• Brake dragging • Worn or damaged wheel bearing • Wheel bearing needs lubrication • Drive chain too tight • Axle nut excessively tightened
WHEEL SPINS FREELY ↓		
2. Check tire pressure with tire gauge	PRESSURE TOO LOW →	• Punctured tire • Faulty tire valve
PRESSURE NORMAL ↓		
3. Try rapid acceleration from low to second	ENGINE SPEED DOES NOT CHANGE WHEN CLUTCH IS RELEASED →	• Clutch slipping • Worn clutch disc/plate • Warped clutch disc/plate
ENGINE SPEED LOWERED WHEN CLUTCH IS RELEASED ↓		
4. Lightly accelerate engine	ENGINE SPEED DOES NOT INCREASE SUFFICIENTLY →	• Carburetor choke closed • Clogged air cleaner • Restricted fuel flow • Clogged fuel tank breather tube • Clogged muffler
ENGINE SPEED INCREASES ↓		
5. Check ignition timing using timing light	INCORRECT →	• Faulty CDI unit • Faulty pulse generator
CORRECT ↓		
6. Check valve clearance	INCORRECT →	• Improper valve adjustment • Worn valve seat
CORRECT ↓		
7. Test cylinder compression using compression gauge	TOO LOW →	• Valve stuck open • Worn cylinder and piston rings • Leaking head gasket • Improper valve timing • Improper valve and seat contact
NORMAL ↓		
8. Check carburetor for clogging	CLOGGED →	• Carburetor not serviced frequently enough
NOT CLOGGED ↓		
9. Remove spark plug	FOULED OR DISCOLORED →	• Plug not serviced frequently enough • Use of plug with improper heat range
NOT FOULED OR DISCOLORED ↓		

		Probable cause
10. Remove oil level gauge and check oil level and for dirty oil	OIL LEVEL INCORRECT →	• Oil level too high • Oil level too low
CORRECT ↓		
11. Remove the valve adjusting cover and inspect lubrication	VALVE TRAIN NOT LUBRICATED PROPERLY →	• Clogged oil passage • Clogged oil control orifice • Contaminated oil Faulty oil pump
VALVE TRAIN LUBRICATED PROPERLY ↓		
12. Check if engine overheats	OVERHEATED →	• Excessive carbon build-up in combustion chamber • Use of improper quality of fuel • Clutch slipping • Fuel air mixture too lean
13. Accelerate or run at high speed	ENGINE KNOCKS →	• Worn piston ring and cylinder • Fuel air mixture too lean • Use of improper grade of oil • Excessive carbon build-up in combustion chamber • Ignition timing too advanced (Faulty CDI unit)
ENGINE DOES NOT KNOCK		

POOR PERFORMANCE AT LOW AND IDLE SPEEDS

		Probable cause
1. Check ignition timing and valve clearance	INCORRECT →	• Improper valve clearance • Improper ignition timing (Faulty CDI unit and pulse generator)
CORRECT ↓		
2. Check carburetor pilot screw adjustment	INCORRECT →	• Fuel air mixture too lean (To correct, screw out) • Fuel air mixture too rich (To correct, screw in)
CORRECT ↓		
3. Check if air is leaking past intake pipe	LEAKING →	• Deteriorated insulator O-ring • Loose carburetor • Damaged insulator
NOT LEAKING ↓		
4. Try spark test	WEAK OR INTERMITTENT SPARK →	• GO TO PAGE 17-2
GOOD SPARK		

POOR PERFORMANCE AT HIGH SPEED

		Probable cause
1. Check ignition timing and valve clearance	INCORRECT →	• Improper valve clearance • Faulty CDI unit • Faulty pulse generator
CORRECT ↓		
2. Disconnect fuel tube at carburetor	FUEL FLOW RESTRICTED →	• Lack of fuel in tank • Clogged fuel tube • Clogged fuel tank breather tube • Clogged fuel valve • Clogged fuel strainer
3. Remove carburetor and check for clogged jet	CLOGGED →	• Clean
NOT CLOGGED ↓		
4. Check valve timing	INCORRECT →	• Cam sprocket not installed properly
CORRECT ↓		
5. Check valve spring tension	WEAK →	• Faulty spring
NOT WEAKENED		

POOR HANDLING → Check tire and suspension pressure

	Probable cause
1. If steering is heavy →	• Bearing adjustment nut too tight • Damaged steering head bearings • Bend steering stem
2. If either wheel is wobbling →	• Excessive wheel bearing play • Bent rim • Improperly installed wheel hub • Swingarm pivot bearing excessively worn • Bent frame
3. If the motorcycle pulls to one side →	• Incorrect drive chain adjustment • Front and rear wheels not aligned • Bent fork legs • Bent swingarm • Bent frame

22. INDEX

Air Cleaner 3-5
Case 4-7
Alternator/Starter Clutch 8-1
Alternator 16-8
Battery/Charging System 16-1
Battery 3-12, 16-3
Brake Caliper 15-9
Brake Fluid 3-13
Replacement/Air Bleeding 15-3
Brake Light Switch 3-14, 19-9
Brake Pad/Disc 15-4
Pedal 14-10
Shoe/Pad Wear 3-13
System 3-13
Cable & Harness Routing 1-9
Camshaft Installation 9-16
Removal 9-4
Carburetor Assembly 4-12
Choke 3-5
Disassembly 4-8
Idle Speed 3-9
Installation 4-16
Removal 4-8
Separation/Combination 4-14
Synchronization 3-8
Charging System 16-6
Clutch/Gearshift Linkage 7-1
Diode 18-7
Installation 7-11
Removal 7-4
Switch 19-9
System 3-15
Connecting Rod/Crankshaft Installation 11-9
Coolant Replacement 5-3
Cooling System 3-9, 5-1
Cowling/Muffler/Rear Fender 12-1
Cowling 12-2
Crankcase Assembly 11-15
Bearing Replacement 11-12
Breather 3-6
Separation 11-3
Crankpin Bearing 11-5
Crankshaft/Transmission 11-1
Crankshaft/Connecting Rod Removal 11-4
Cylinder Head/Valve 9-1
Compression 3-10
Cylinder/Piston 10-1
Cylinder Head Assembly 9-14
Cylinder Head Cover Installation 9-19
Removal 9-3
Cylinder Head Installation 9-15
Removal 9-8
Cylinder Installation 10-6
Removal 10-2
Drive Chain 3-11
Drive Chain Slider 3-12
Electric Starter 18-1
Emission Control Information Labels
(U.S.A. only) 1-16
Emission Control Systems 1-14
Engine Removal/Installation 6-1
Installation 6-2
Engine Oil Change 2-3
Filter Replacement 2-4
Level Check 2-3
Engine Removal 6-2
Evaporative Emission Control System
(California model only) 3-10
Flywheel Installation 8-5
Removal 8-2
Fork Legs 13-11
Front Wheel/Suspension/Steering 13-1
Wheel 13-5
Fuel System 4-1
Line 3-4
Strainer Screen 3-4
Tank 4-3
Valve 4-4
Gearshift Linkage 7-8
General Information 1-1
Safety 1-1
Handlebars 13-3
Switch 19-6
Headlight 19-2
Aim 3-14
High Altitude Adjustment (U.S.A Only) 4-19
Horn 19-9
Hydraulic Brake 15-1
Ignition System 17-1
Coil 17-4
Switch 19-5
Timing 17-6
Instruments 19-4
Left Crankcase Cover Installation 8-5
Removal 8-2
License Light 19-3
Lights/Instruments/Switches 19-1
Lubrication 2-1
Points 2-10
Main Bearing 11-7
Maintenance 3-1
Schedule 3-3
Master Cylinder 15-7
Model Identification 1-2
Muffler/Exhaust Pipes 12-4
Neutral Switch 19-8
Nuts, Bolts, Fasteners 3-17
Oil Pressure Check 2-4
Switch 19-7
Oil Pump 2-5
Pilot Screw 4-17
Adjustment 4-18
Piston Installation 10-5
Removal 10-3
Ring Installation 10-5
Primary Drive Gear 7-9
Pulse Generator 17-5
Purge Control Valve Inspection
(California model) 4-20
Radiator 5-6
Coolant 3-9
Rear Wheel/Brake/Suspension 14-1
Brake 14-7
Fender 12-5

Wheel 14-3
Reguletor/Rectifier 16-7
Reserve Tank 5-10
Right Crankcase Cover Installation 7-13
Removal 7-3
Service Information
Alternator/Starter Clutch 8-1
Battery/Charging System 16-1
Clutch/Gearshift Linkage 7-1
Cooling System 5-1
Cowling/Muffler/Rear Fender 12-1
Crankshaft/Transmission 11-1
Cylinder Head/Valve 9-1
Cylinder/Piston 10-1
Electric Starter 18-1
Engine Removal/Installation 6-1
Front Wheel/Suspension/Steering 13-1
Fuel System 4-1
Hydraulic Brake 15-1
Ignition System 17-1
Lights/Instruments/Switches 19-1
Lubrication 2-1
Maintenance 3-1
Rear Wheel/Brake/Suspension 14-1
Service Rules 1-1
Shock Absorber 14-10
Linkage 14-14
Side Cover 12-4
Side Stand 3-15
Switch 17-6
Silicon Diode 17-6
Spark Arrester (U.S.A. only) 3-16
Plugs 3-6
Specifications 1-3
Starter Clutch 8-3
Motor 18-3
Relay Switch 18-6
Steering Head Bearings 3-18
Stem 13-18
Stop & Taillight 19-3
Suspension 3-16
Swingarm 14-16
System Inspection 17-4
Testing 5-2
Tachometer 19-8
Temperature Gauge 19-8
Thermosensor 5-5
Thermostat 5-3
Thermostatic Switch 5-5
Throttle Operation 3-4
Tools 1-7
Torque Values 1-5
Transmission Installation 11-14
Removal 11-10
Troubleshooting
Battery/Charging System 16-2
Clutch/Gearshift Linkage 7-2
Cooling System 5-1
Crankshaft/Transmission 11-2
Cylinder Head/Valve 9-2
Cylinder/Piston 10-1
Electric Starter 18-2
Front Wheel/Suspension/Steering 13-2
Fuel System 4-2
Hydraulic Brake 15-2
Ignition System 17-2
Lights/Instruments/Switches 19-1
Lubrication 2-2
Rear Wheel/Brake/Suspension 14-2
Turn Signal Light 19-3
Valve Clearance 3-7
Guide Replacement 9-10
Seat Inspection/Refacing 9-11
Water Pump 5-8
Wheels/Tires 3-17
Wiring Diagram 20-1

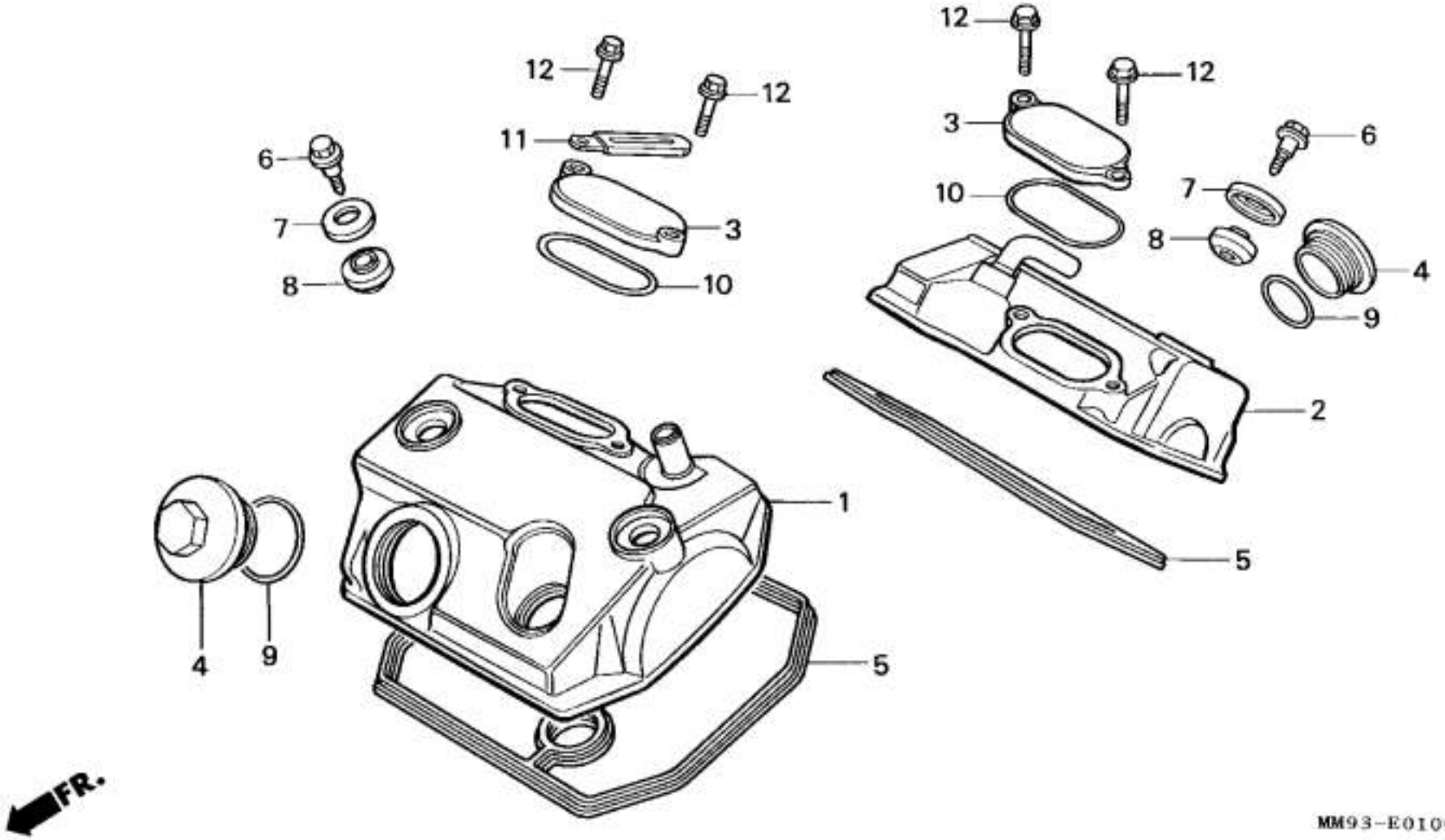
12
12
12
12
11
6
7
8
3
10
6
7
8
4
9
3
10
2
1
5
4
9
5
FR.
MM93-E0100A

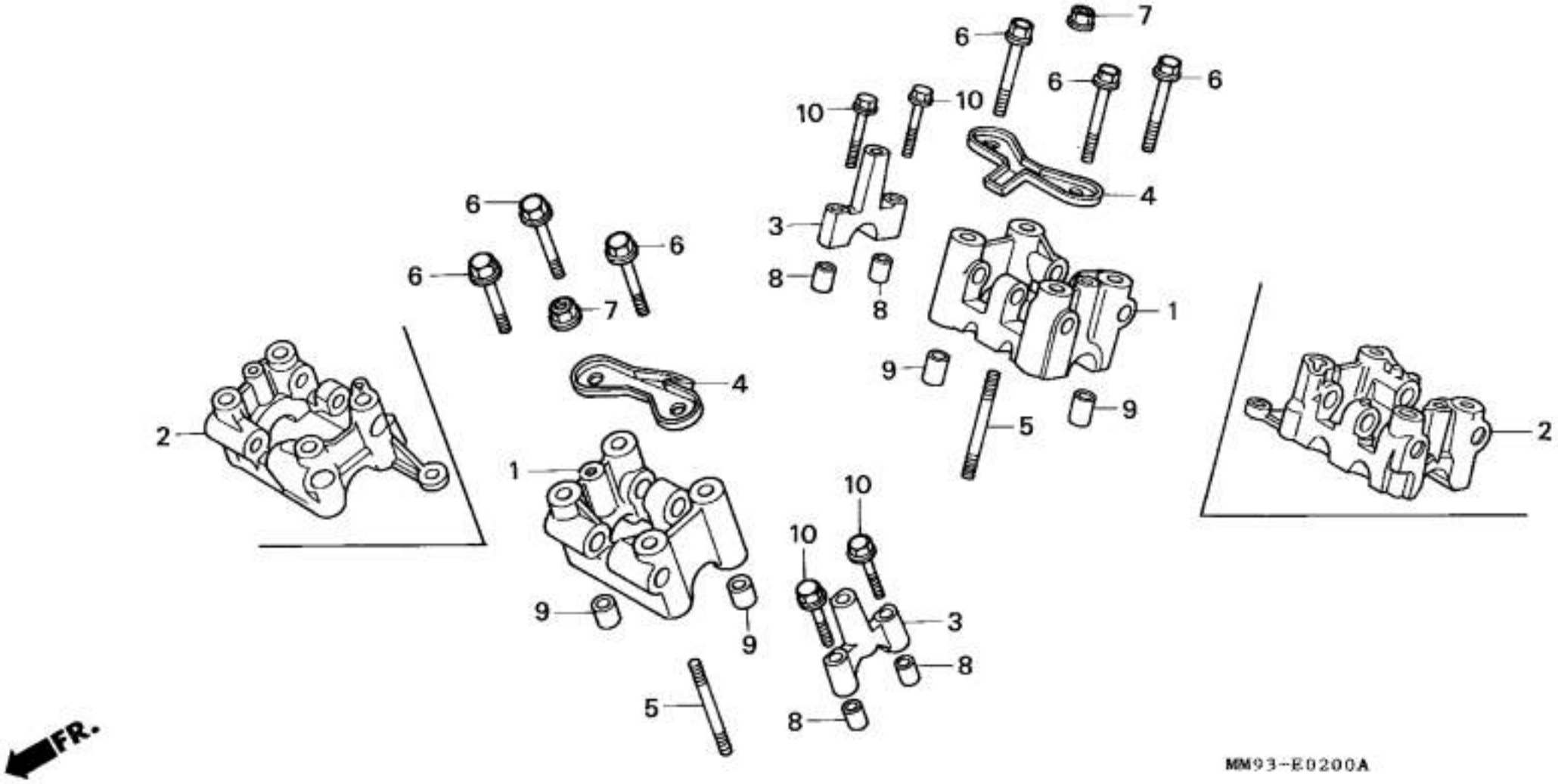
FR.
MM93-E0200A

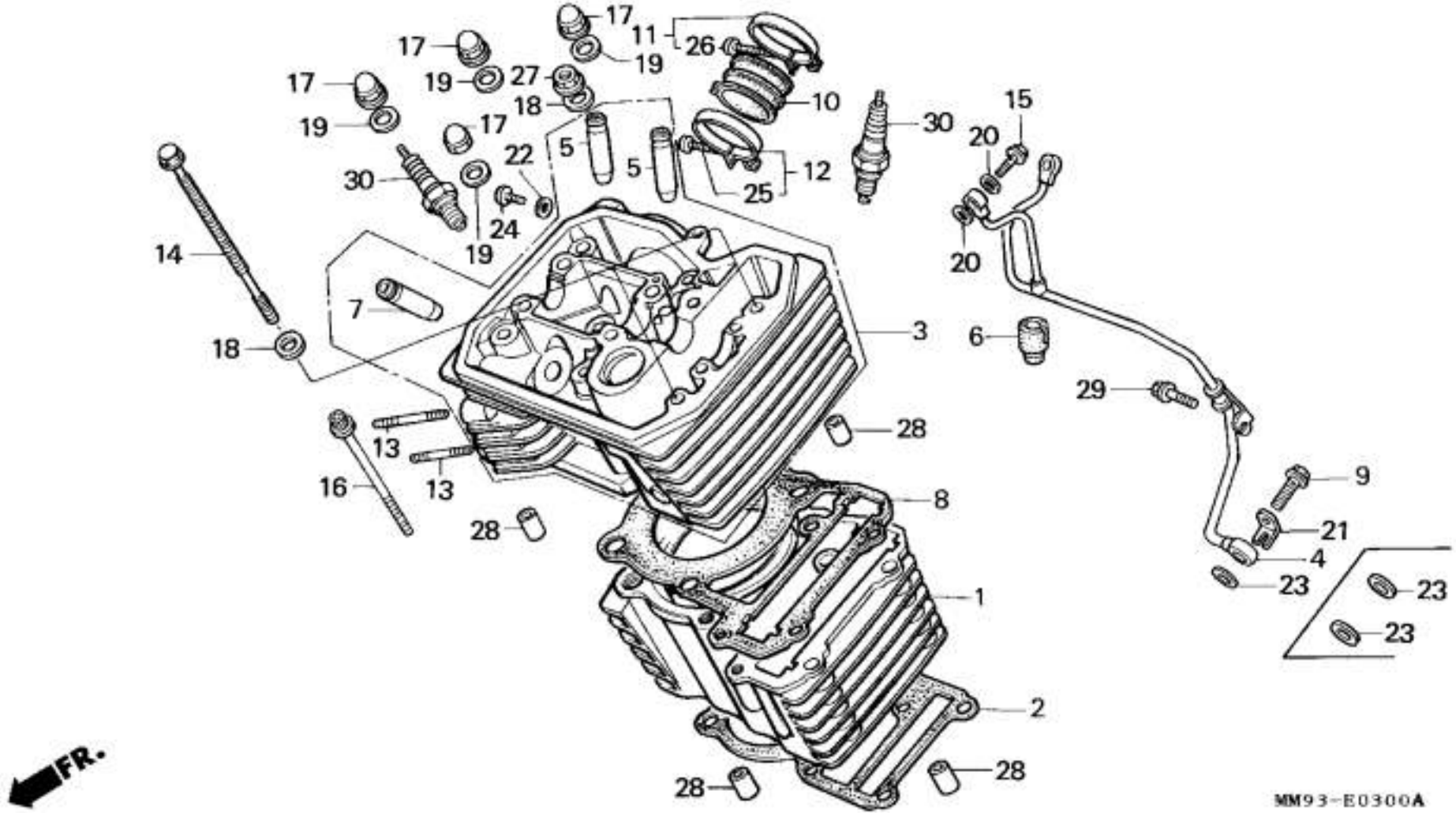

17
11
26
19
17
19
27
17
18
10
19
17
30
15
20
5
22
5
12
30
25
24
19
20
14
7
3
6
18
29
28
13
13
16
9
8
28
21
4
23
23
1
23
2
28
28
FR.
MM93-E0300A

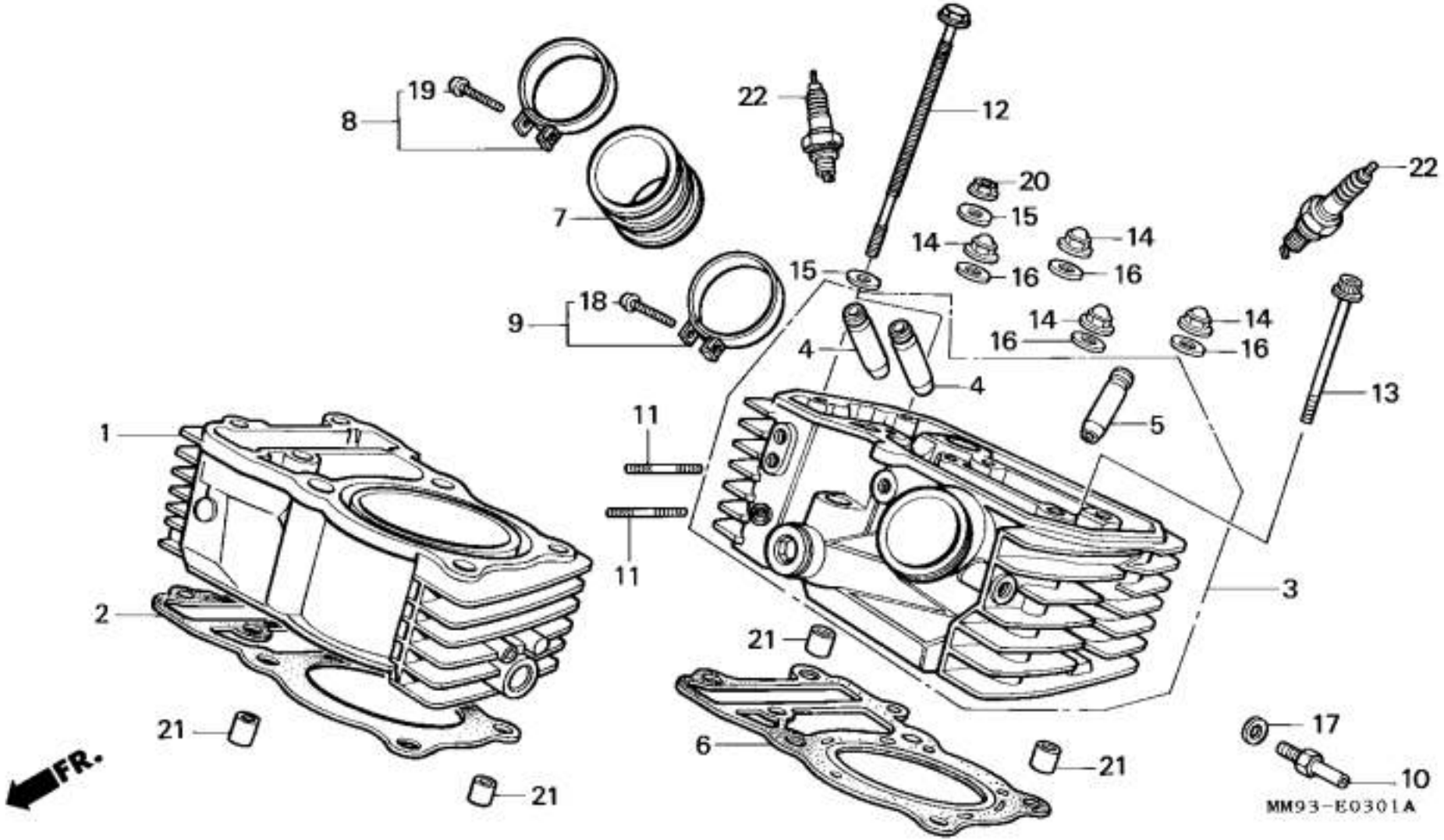
1
2
3
4
4
5
6
7
8
9
10
11
11
12
13
14
14
14
14
15
15
16
16
16
16
17
18
19
20
21
21
21
21
22
22
FR.
MM93-E0301A

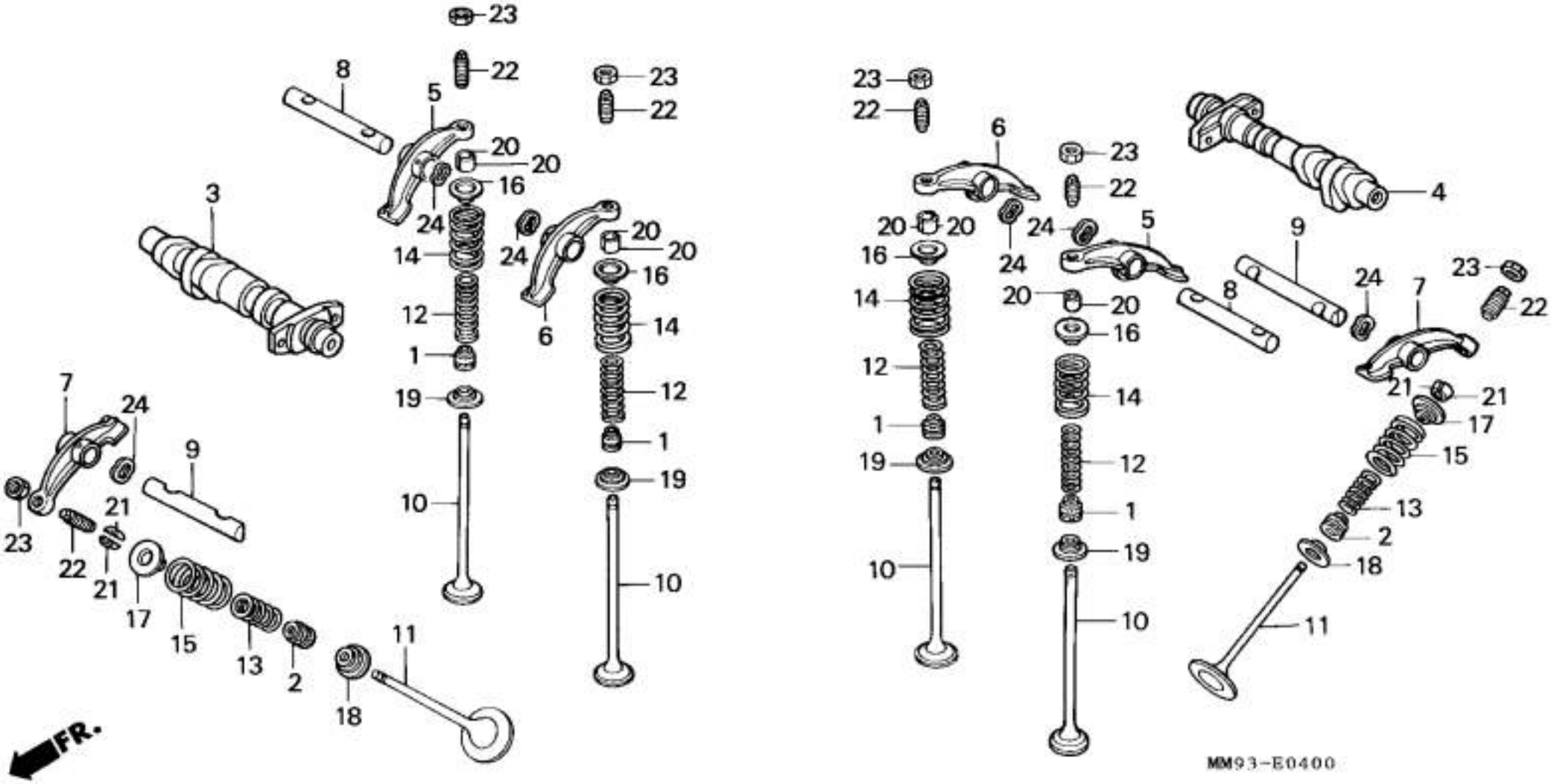
23
22
8
5
20
20
16
24
3
14
12
1
19
10
24
6
20
20
16
14
12
1
19
10
7
24
9
23
22
21
21
17
15
13
2
18
11
FR.
23
22
6
23
22
20
20
24
16
14
12
1
19
10
4
5
9
24
8
20
20
16
14
12
1
19
10
7
23
22
21
21
17
15
13
2
18
11
MM93-E0400

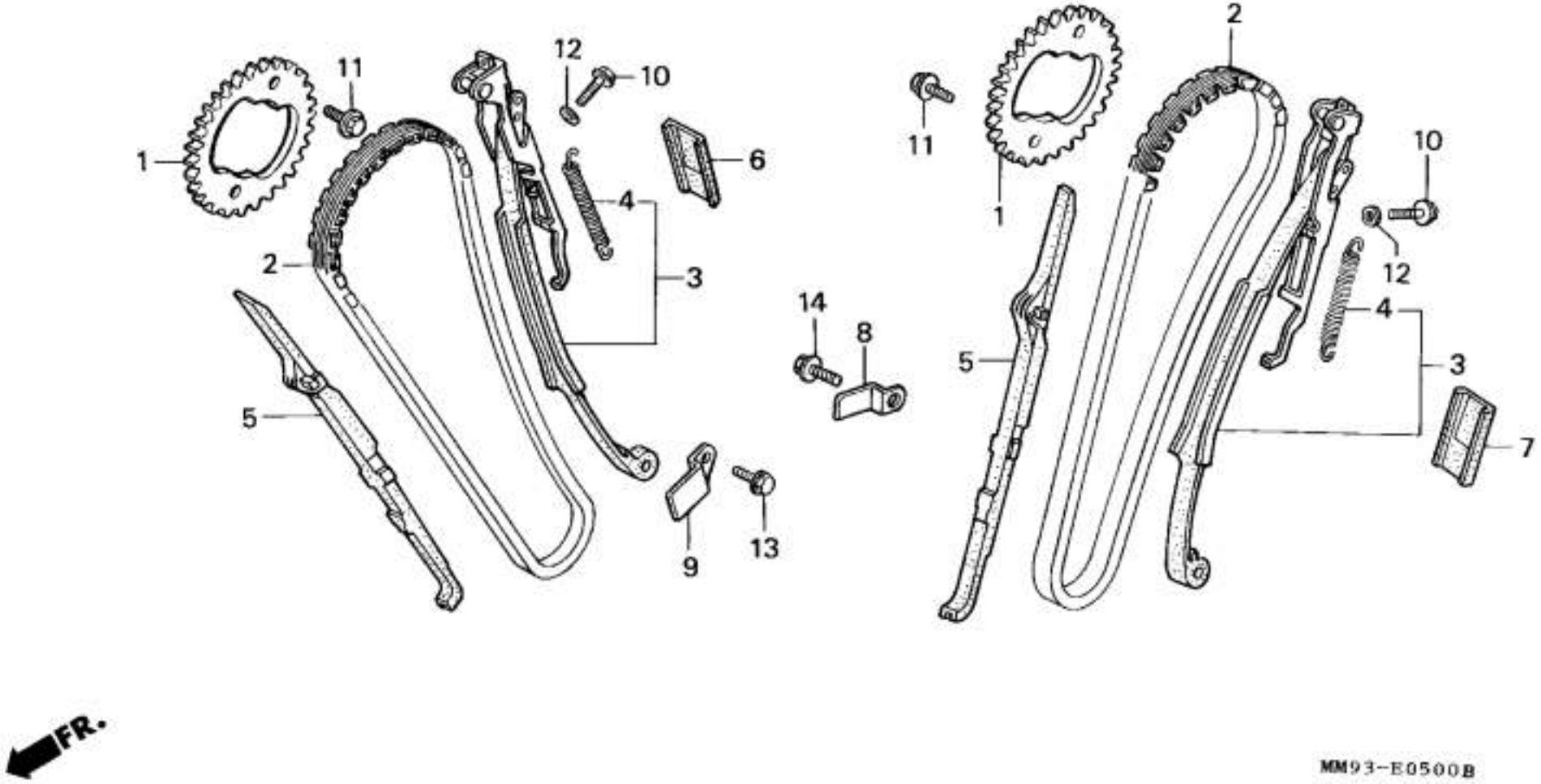
1
11
12
10
6
4
3
2
5
14
8
9
13
FR.
MM93-E0500B

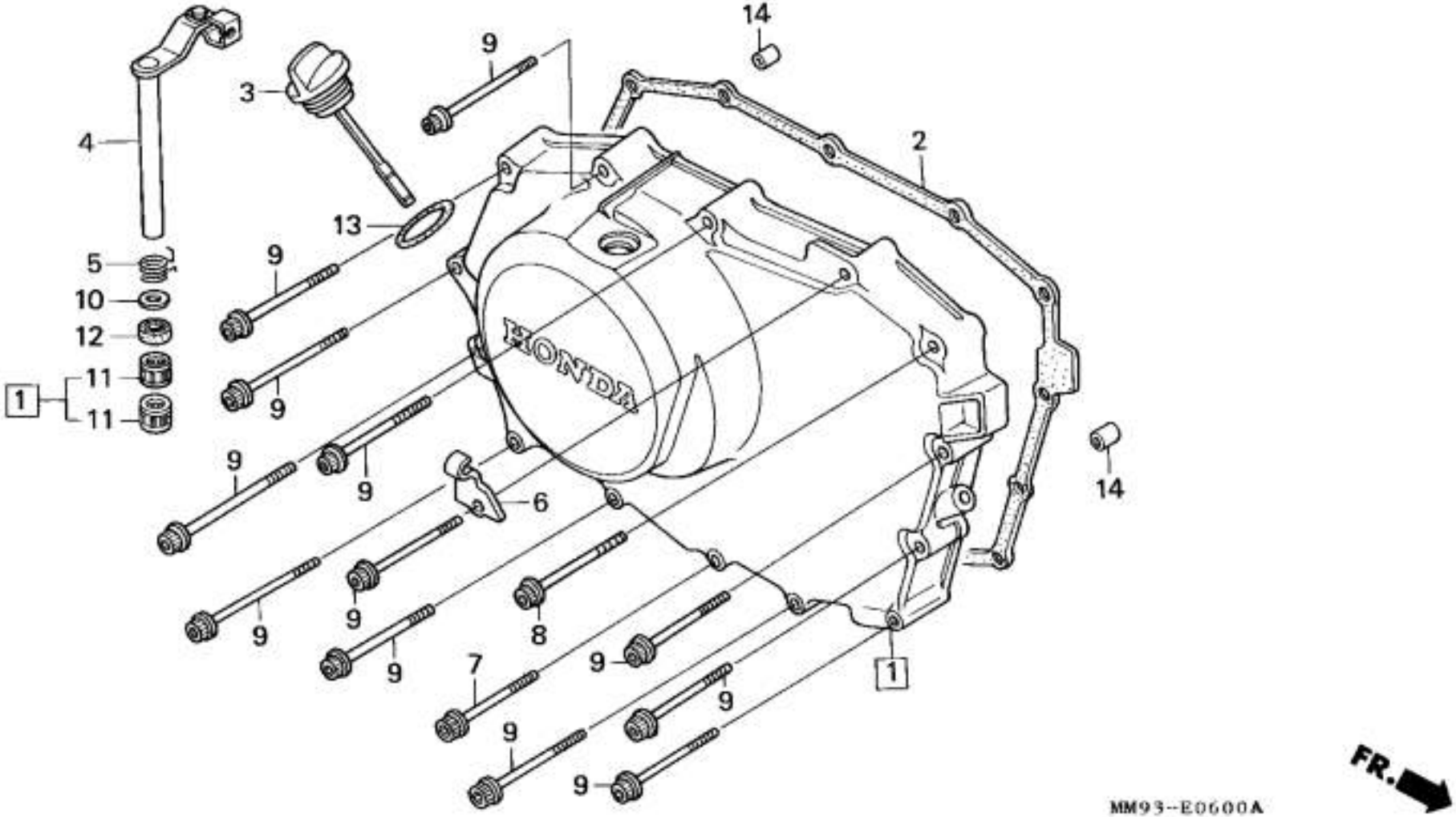

14
9
3
4
2
13
5
9
10
12
11
1
11
9
9
9
6
14
9
9
8
9
9
7
9
1
9
9
9
FR.
MM93-E0600A

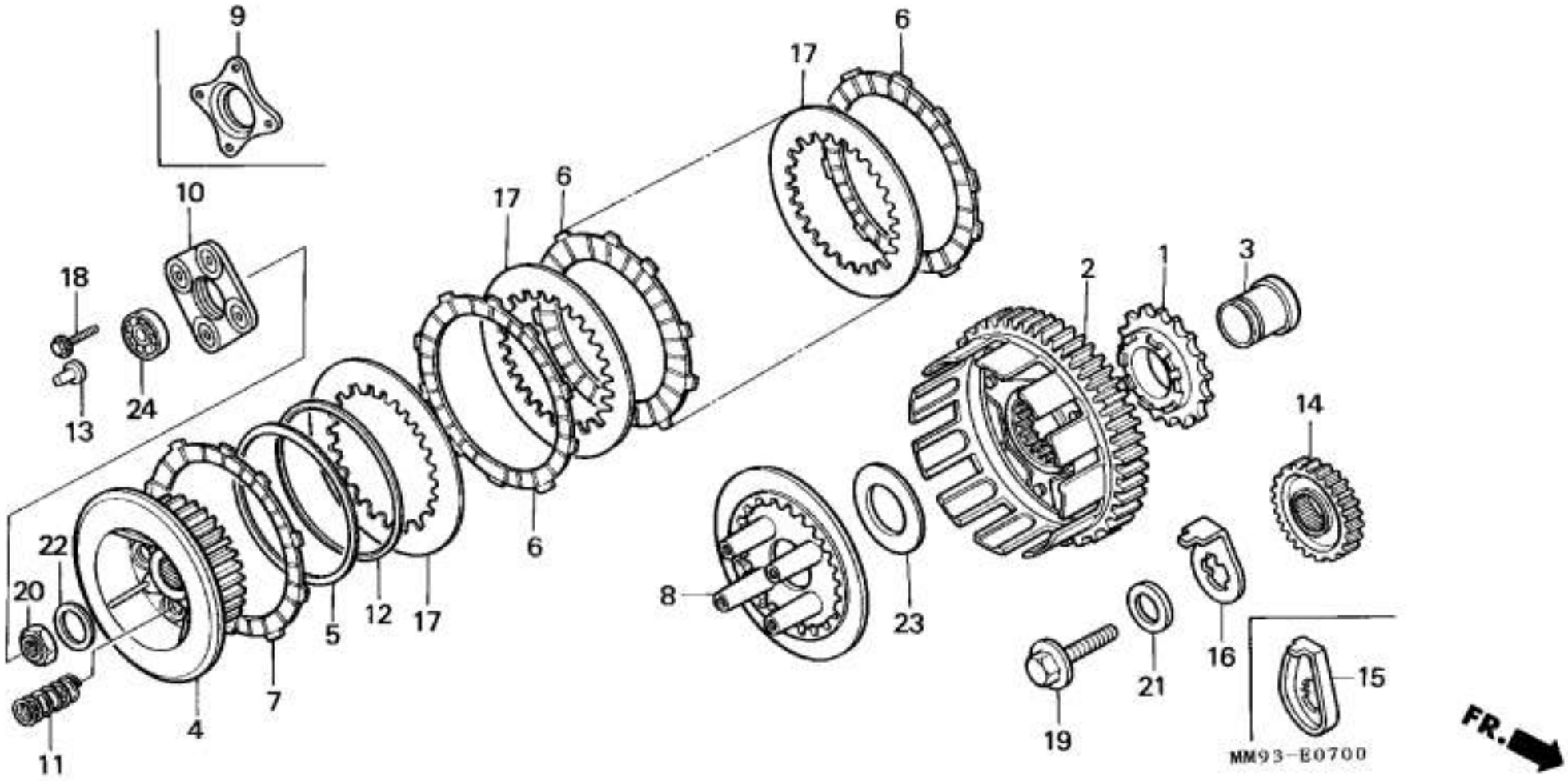
9
10
18
13
24
17
6
17
6
6
2
1
3
14
22
20
11
4
7
5
12
17
8
23
16
21
19
15
MM93-E0700
FR.

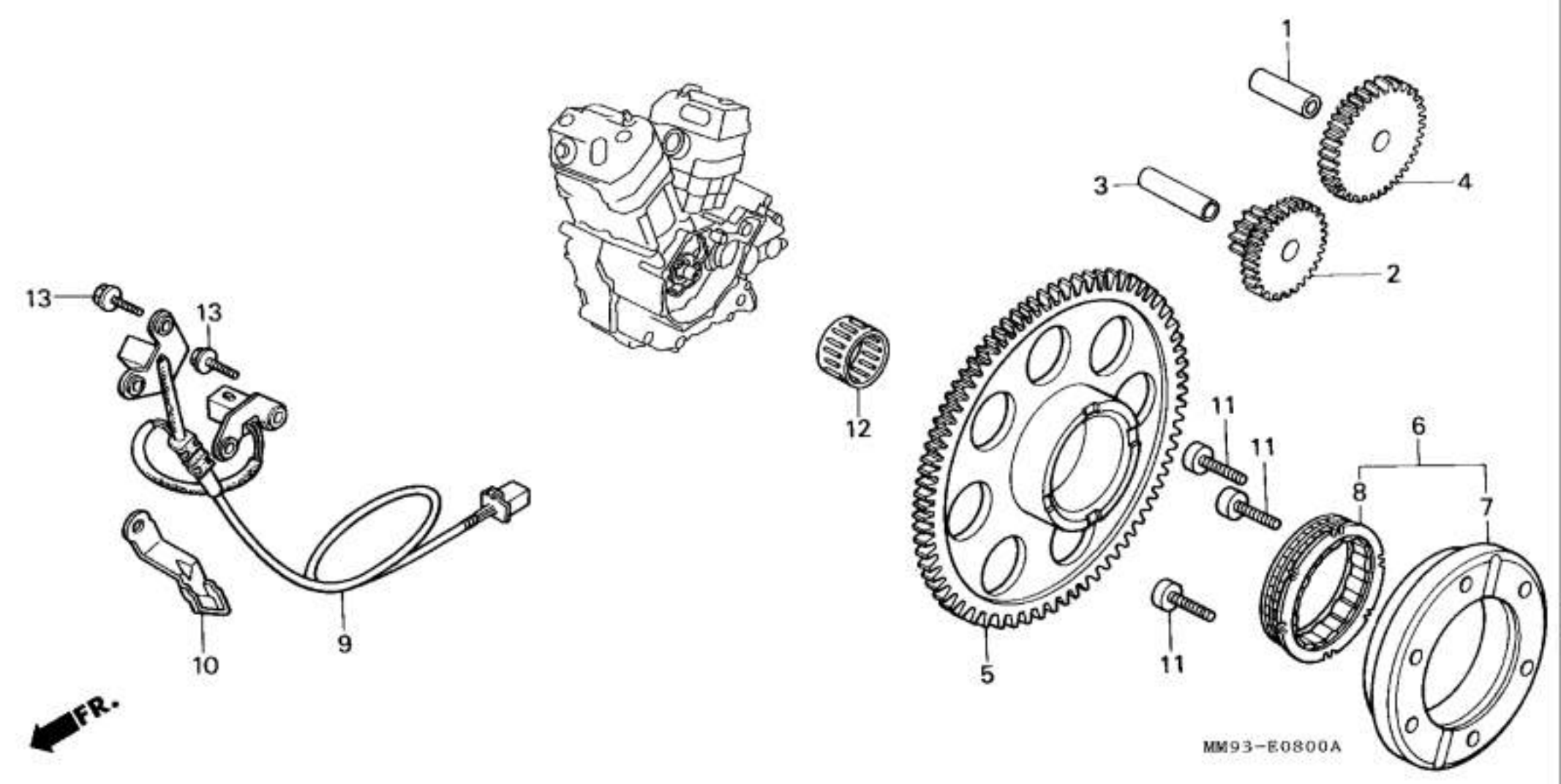
1
2
3
4
5
6
7
8
9
10
11
11
11
12
13
13
FR.
MM93-E0800A

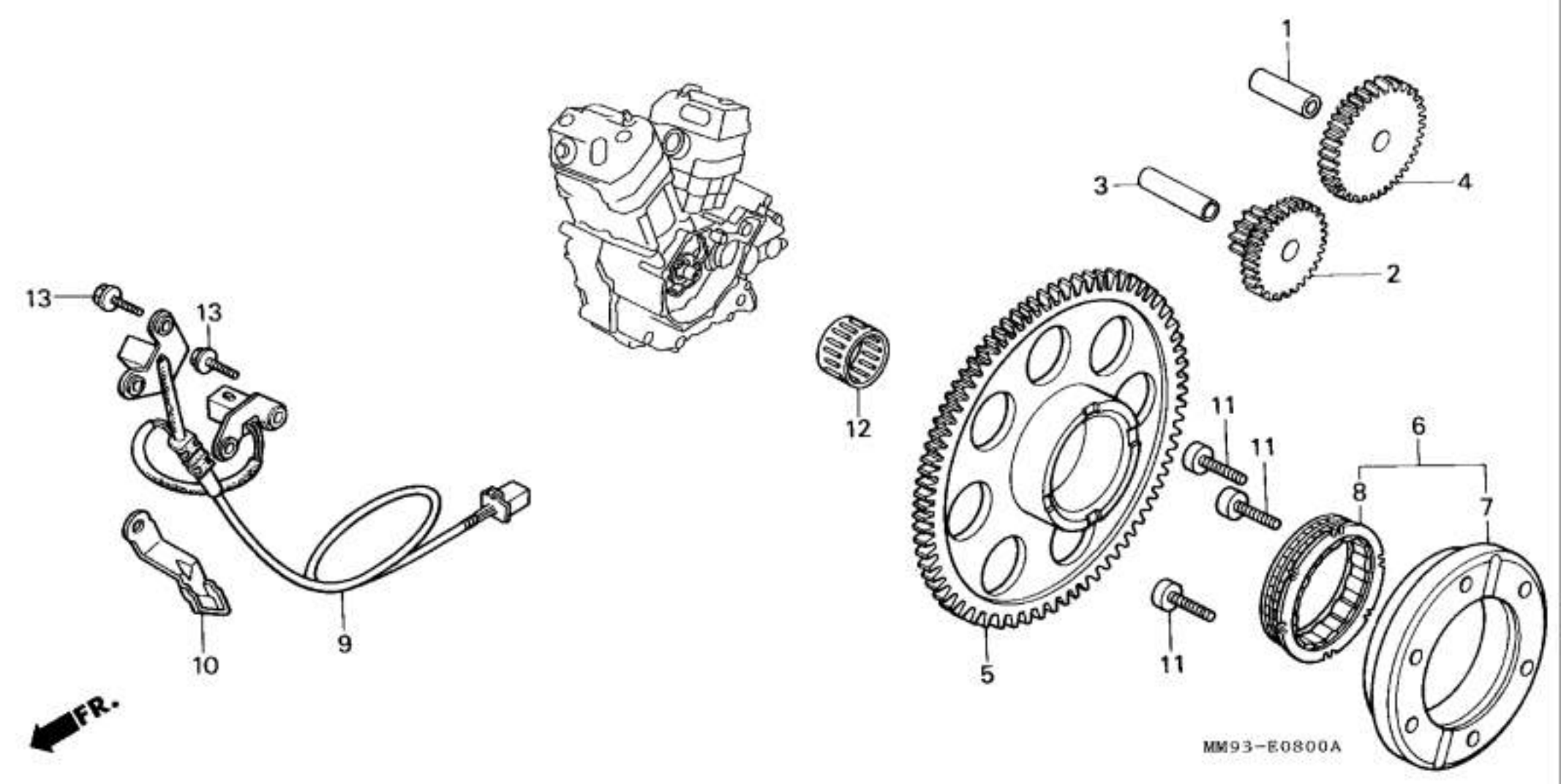
1
2
3
4
5
6
7
8
9
10
11
11
11
12
13
13
FR.
MM93-E0800A

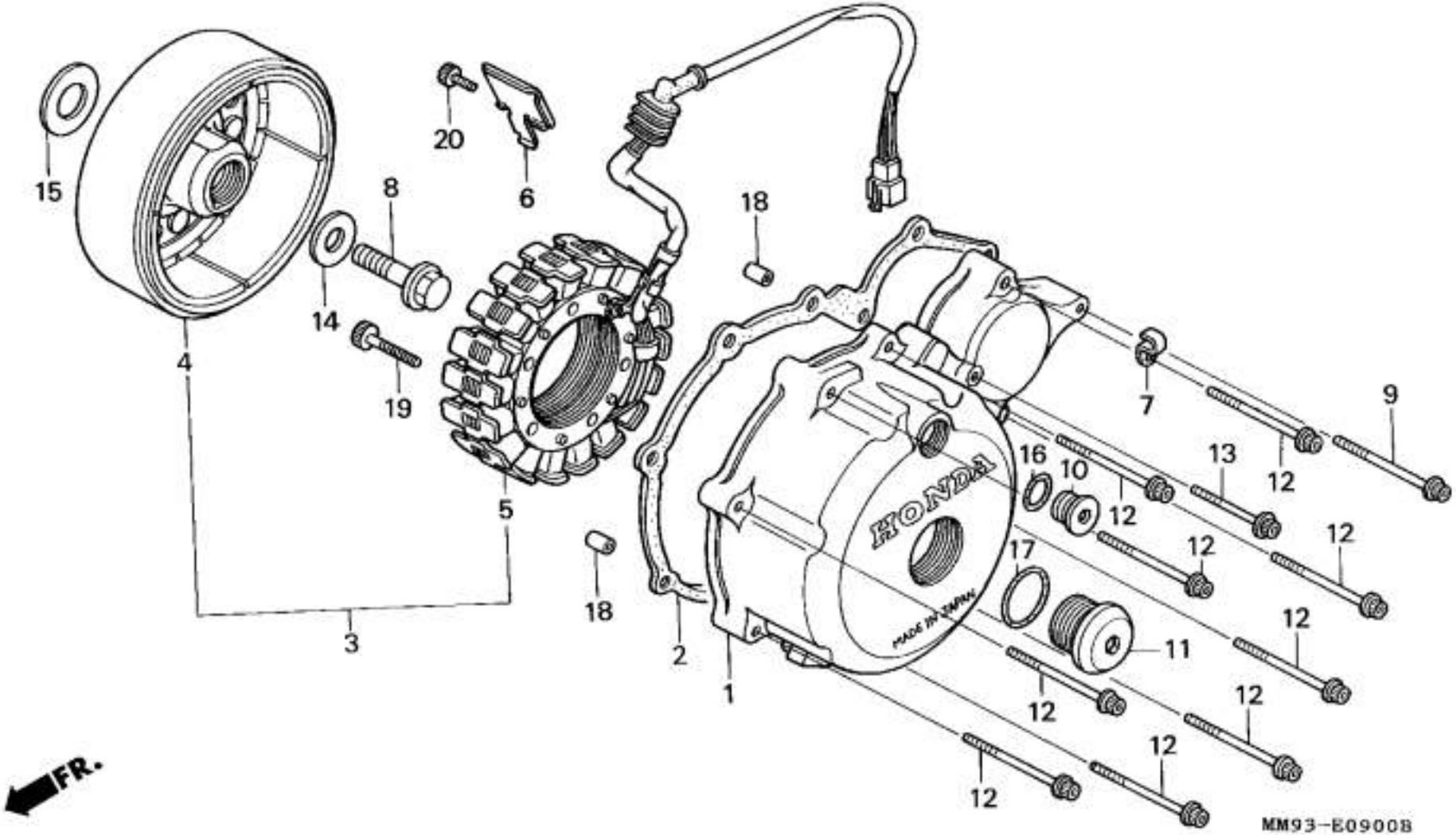

15
20
6
8
18
14
4
19
7
9
16
10
13
12
5
HONDA
17
18
3
2
1
11
FR.
MM93-E0900B

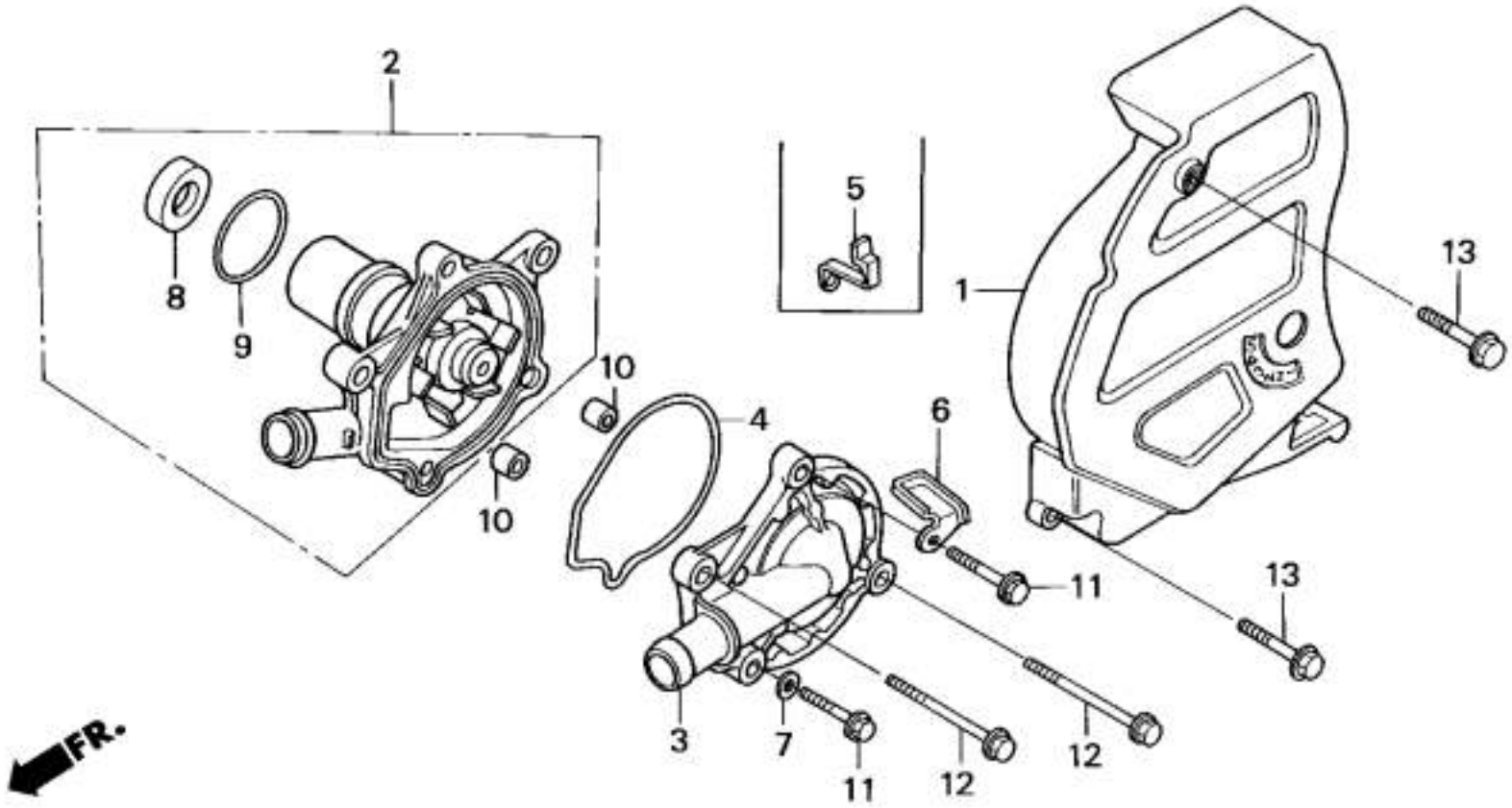

MM93-E1000B

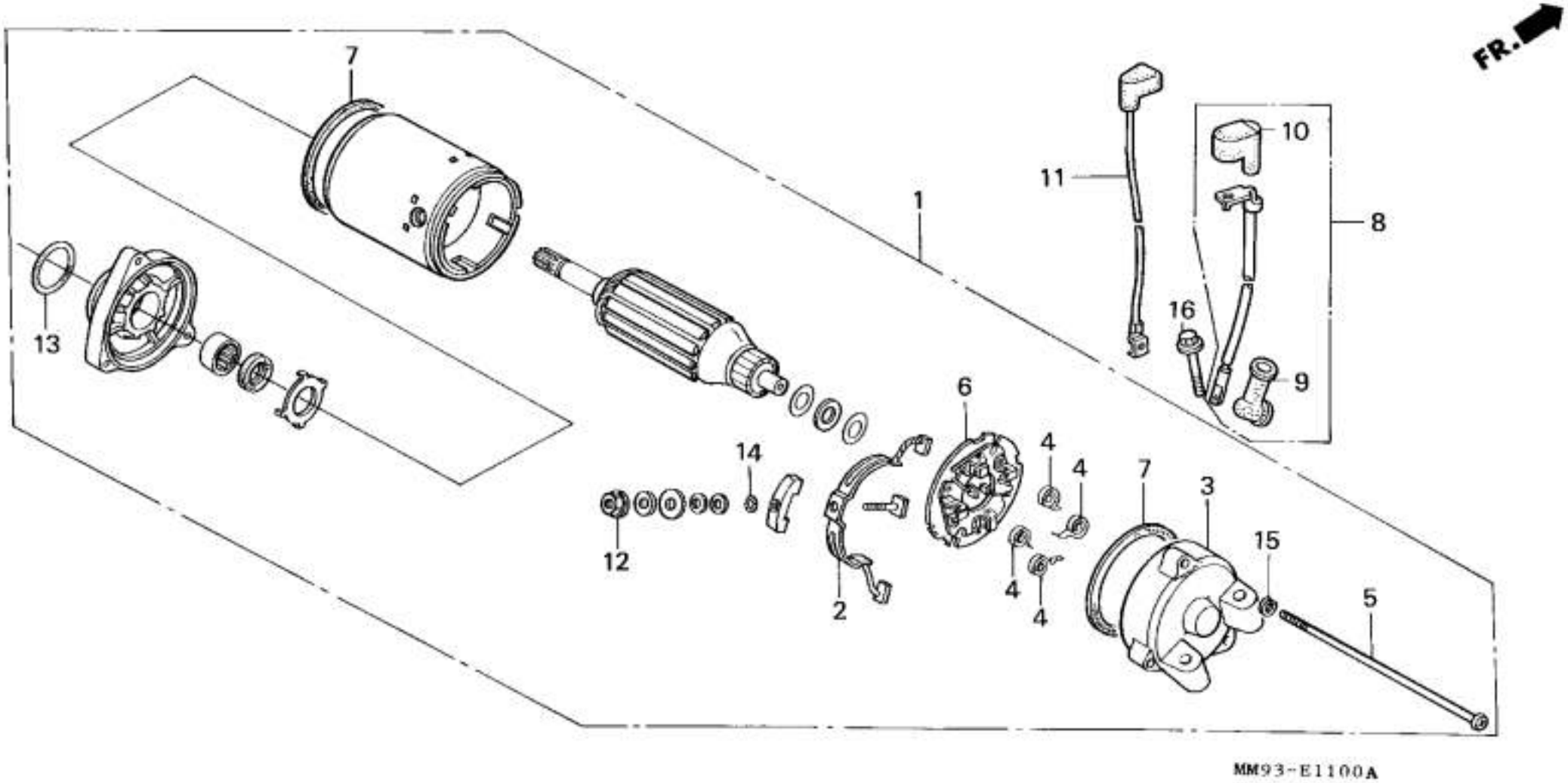
FR.
1
2
3
4
4
4
4
4
5
6
7
7
8
9
10
11
12
13
14
15
16
MM93-E1100A

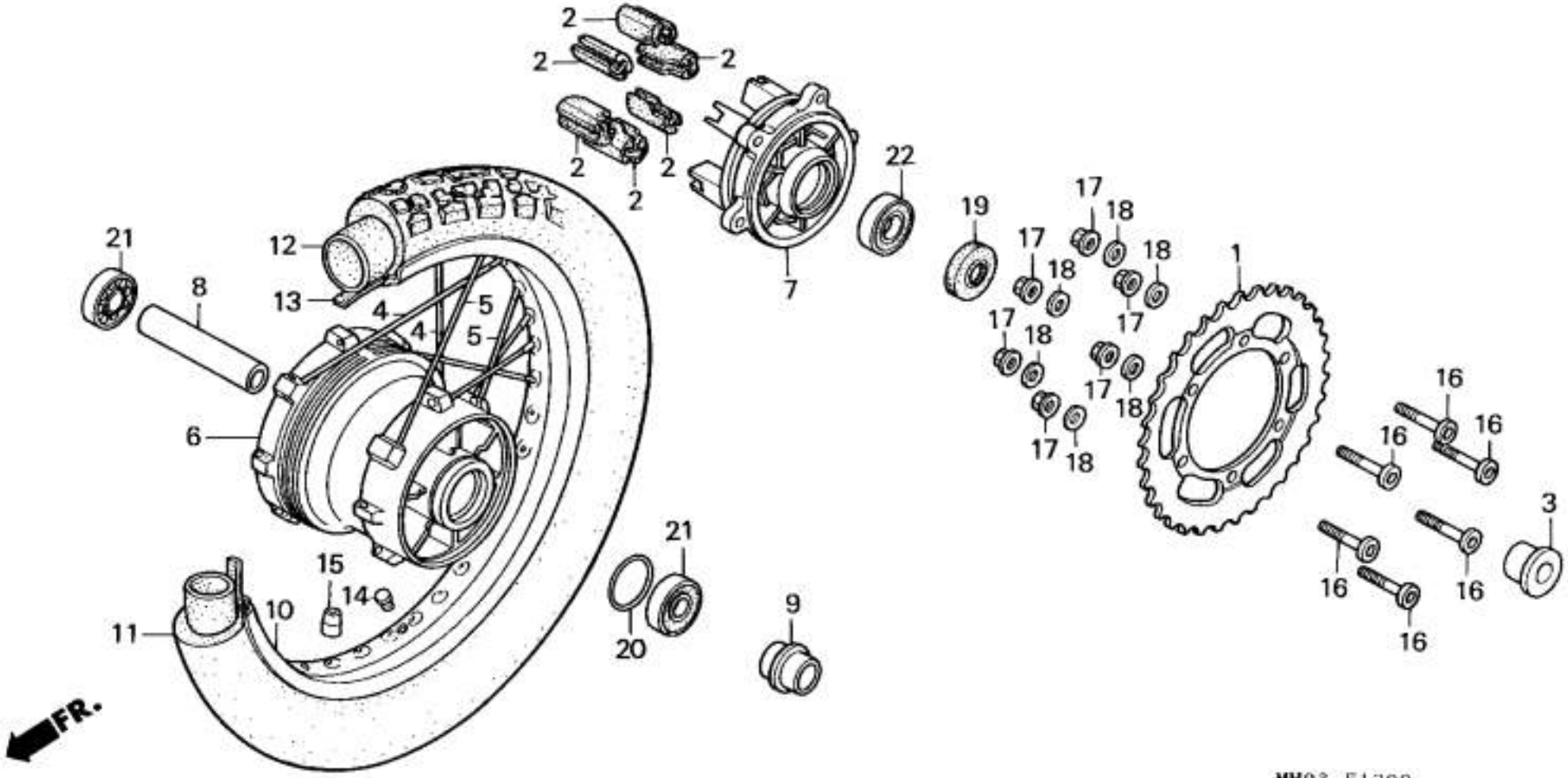
2
2
2
2
2
2
22
7
19
17
18
1
16
3
21
8
12
13
4
5
6
15
14
10
11
21
20
9
FR.
MM93-F1200

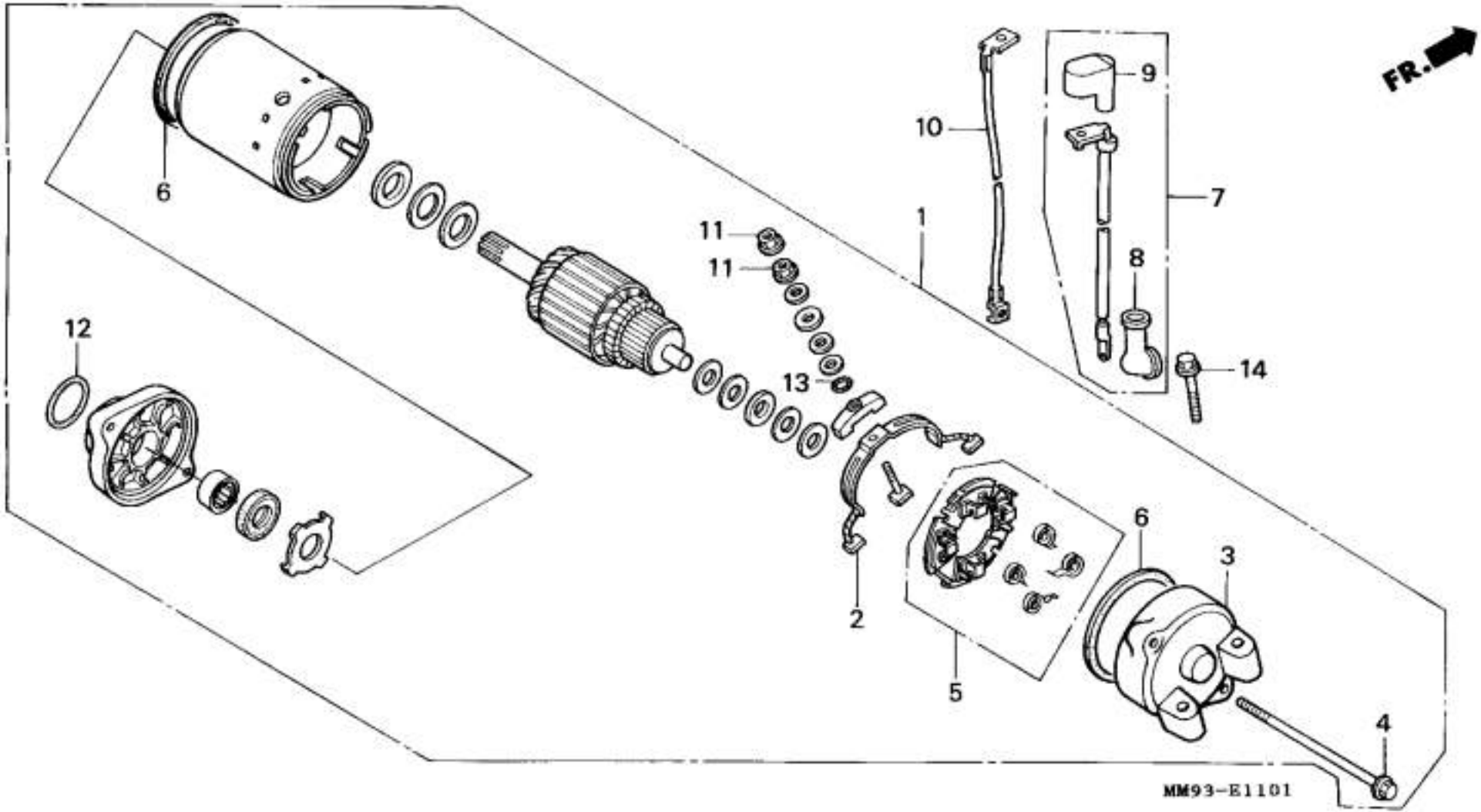
FR.
1
2
3
4
5
6
6
7
8
9
10
11
11
12
13
14
MM93-E1101

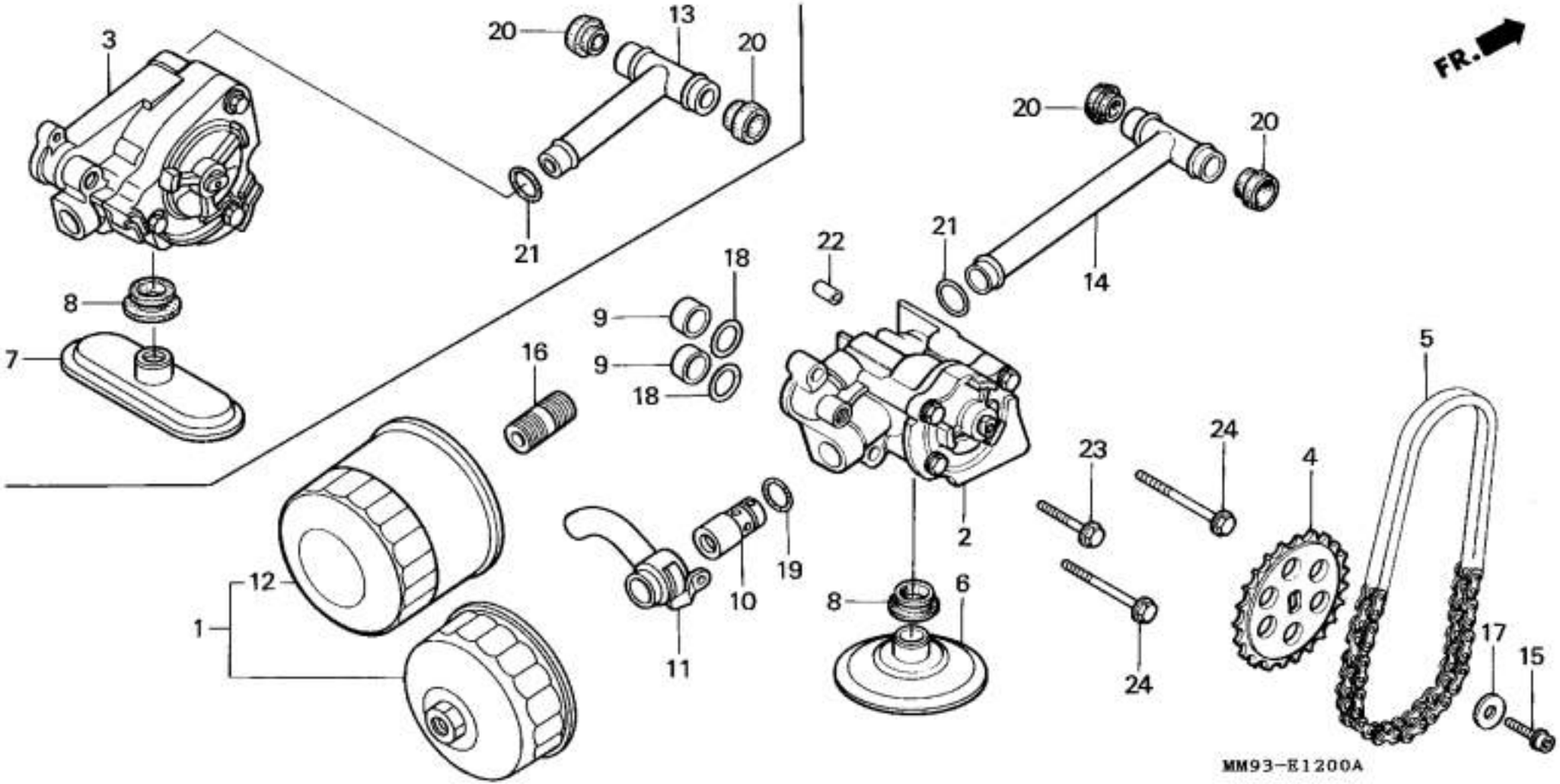

FR.
3
20
13
20
20
20
21
21
22
14
18
8
9
9
18
7
16
5
24
23
4
2
12
19
10
8
6
1
11
24
17
15
MM93-E1200A

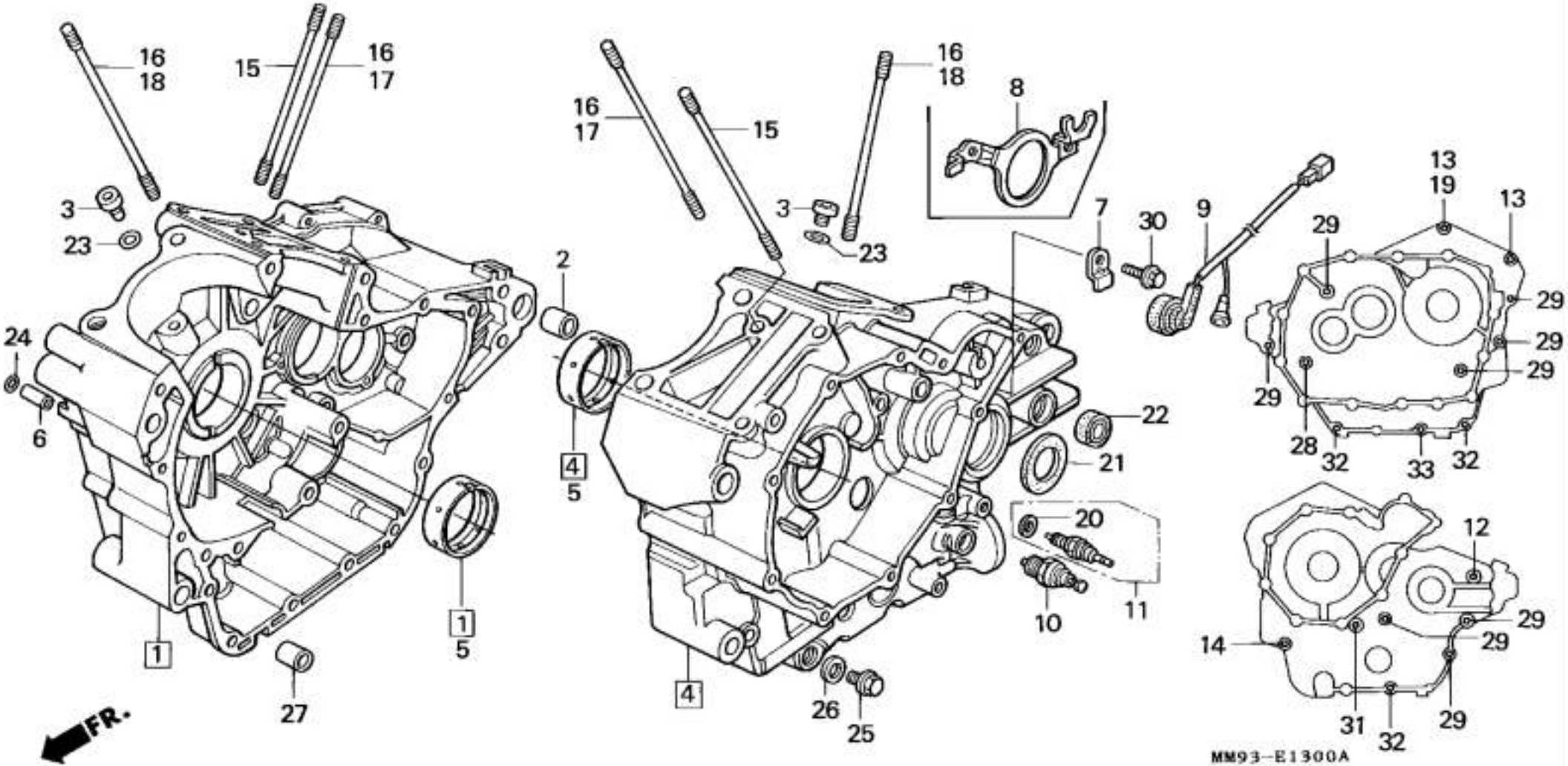
16
18
15
16
17
3
23
24
6
1
27
1
5
16
17
15
16
18
8
3
23
2
4
5
4
26
25
7
30
9
13
19
13
29
29
29
29
29
28
32
33
32
22
21
20
10
11
12
29
29
14
31
32
29
FR.
MM93-E1300A

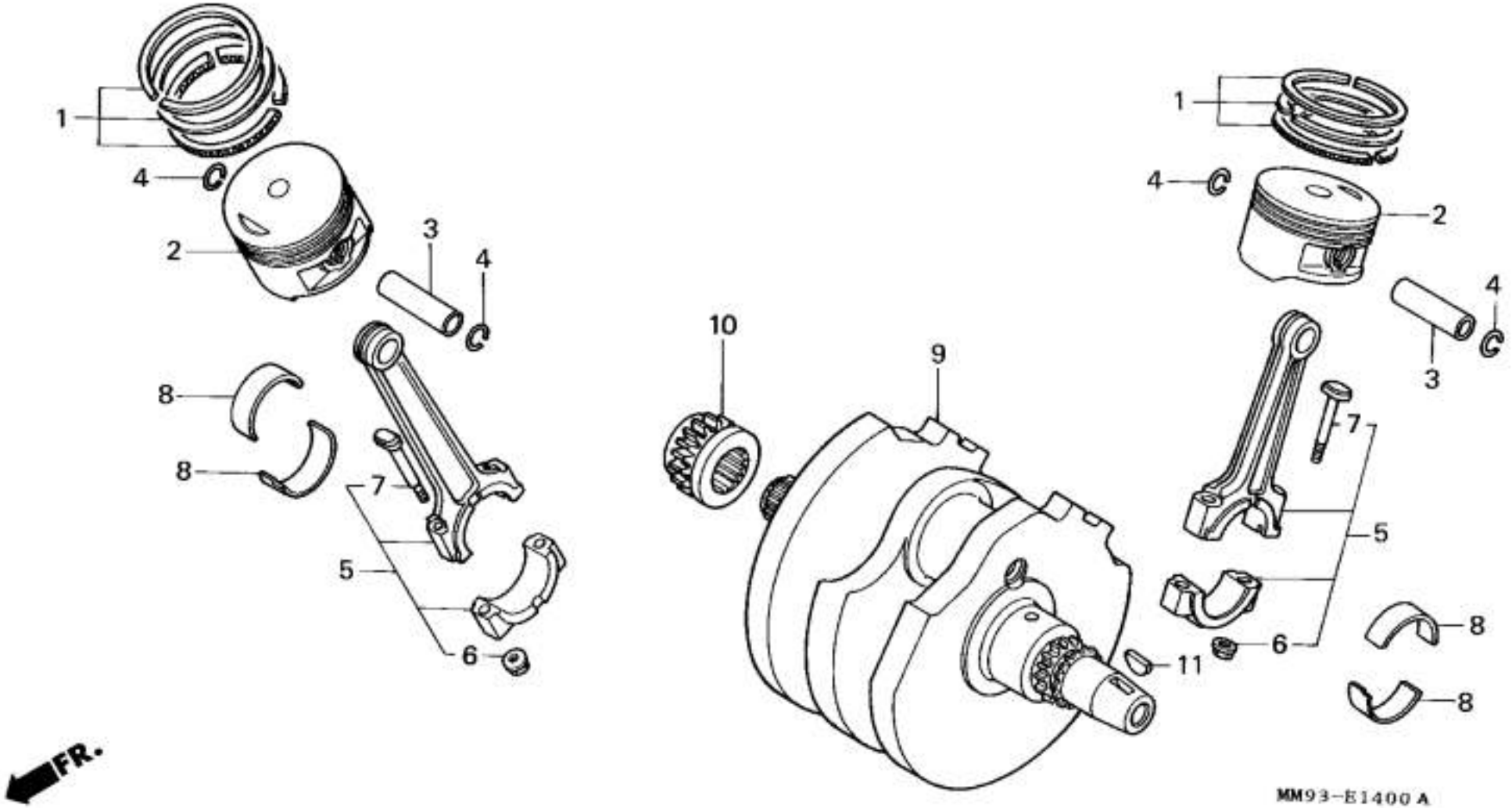
1
4
2
3
4
8
8
7
5
6
10
9
11
1
4
2
4
3
7
5
6
8
8
FR.
MM93-E1400A

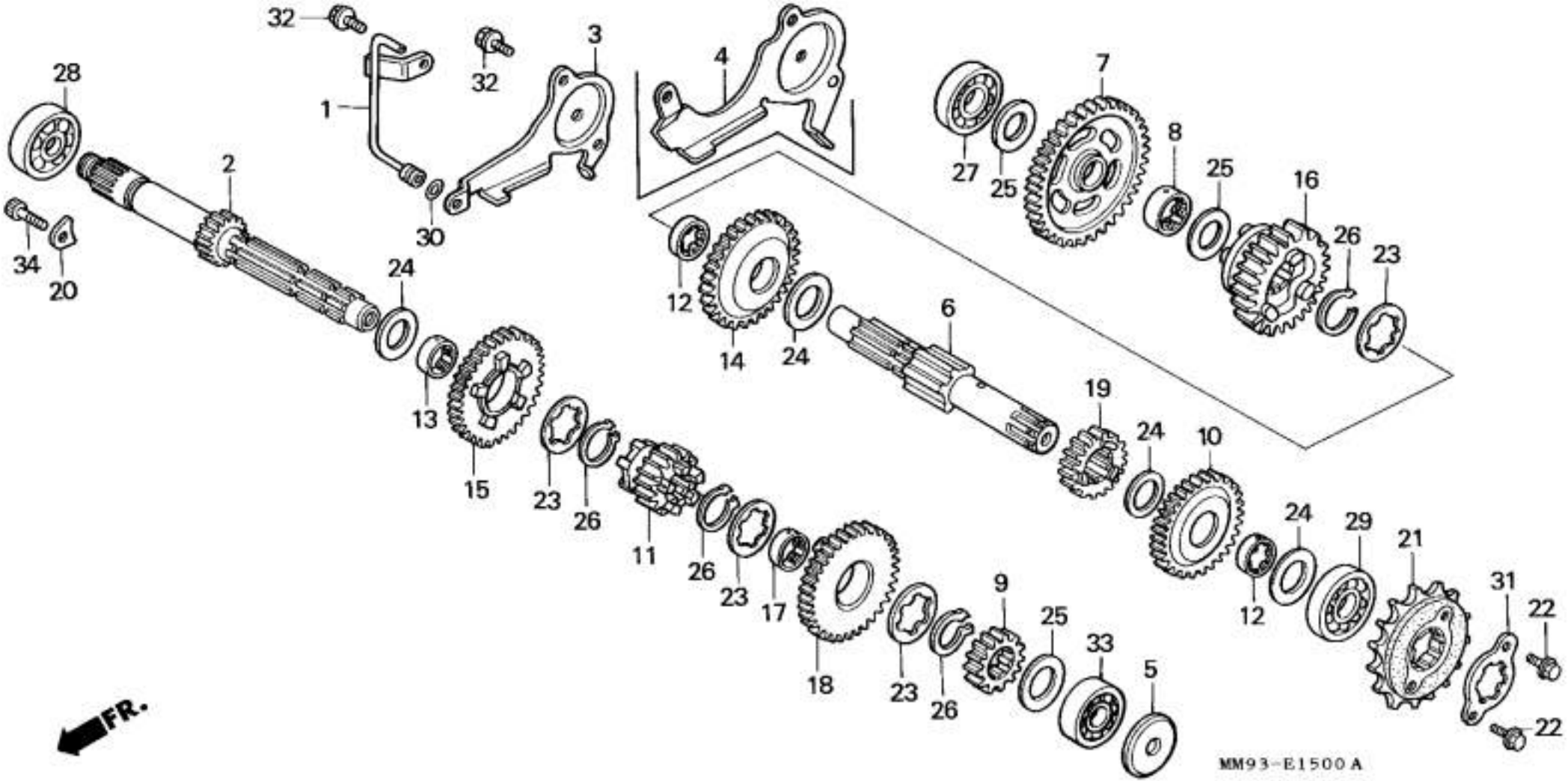
32
32
3
4
28
1
2
30
34
20
27
25
7
8
25
16
26
23
12
14
24
6
24
13
15
23
26
11
26
23
17
18
23
26
9
25
33
5
19
24
10
12
24
29
21
31
22
22
FR.
MM93-E1500A

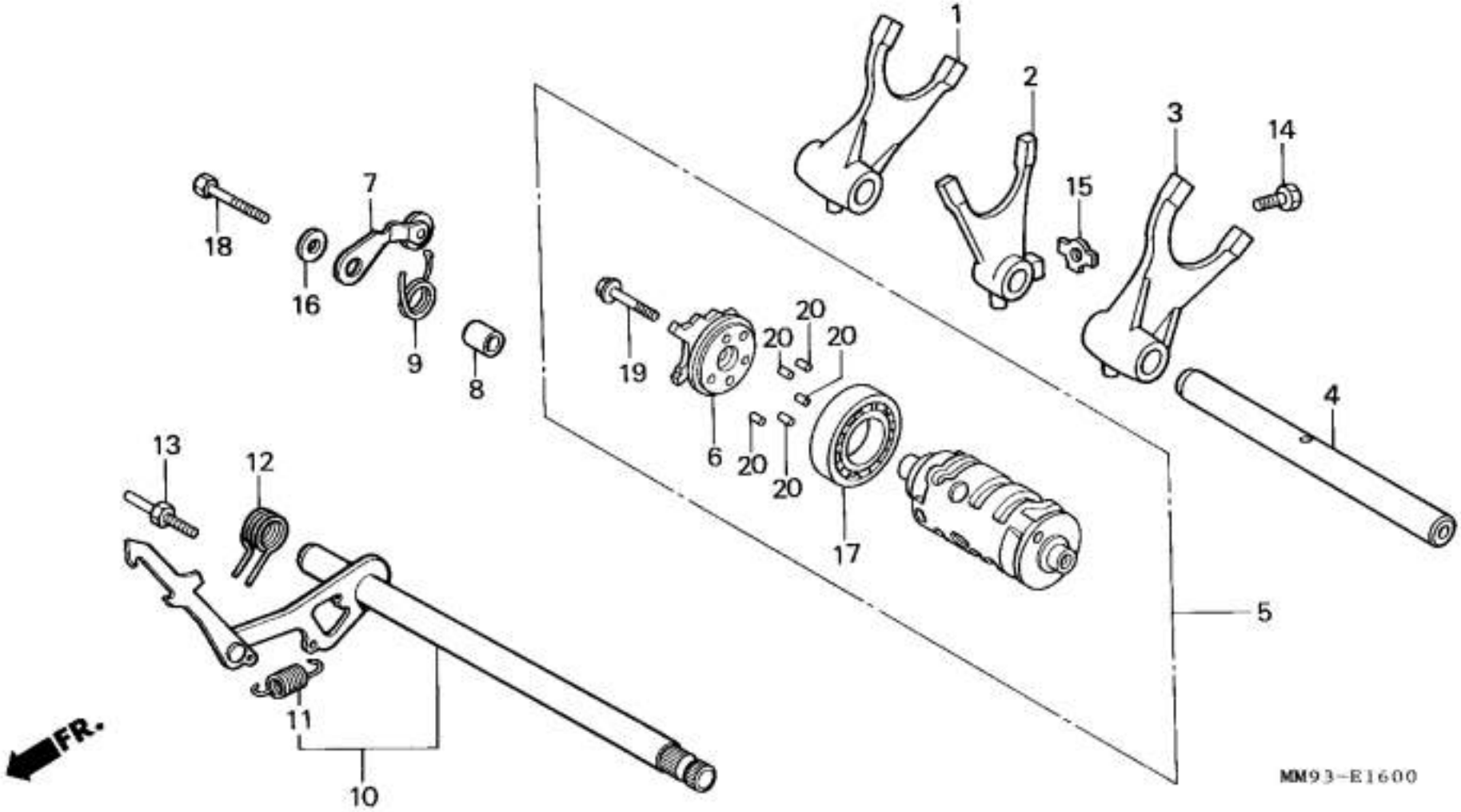
1
2
3
14
15
4
5
18
16
7
9
8
19
6
20
20
20
20
20
17
13
12
11
10
FR.
MM93-E1600

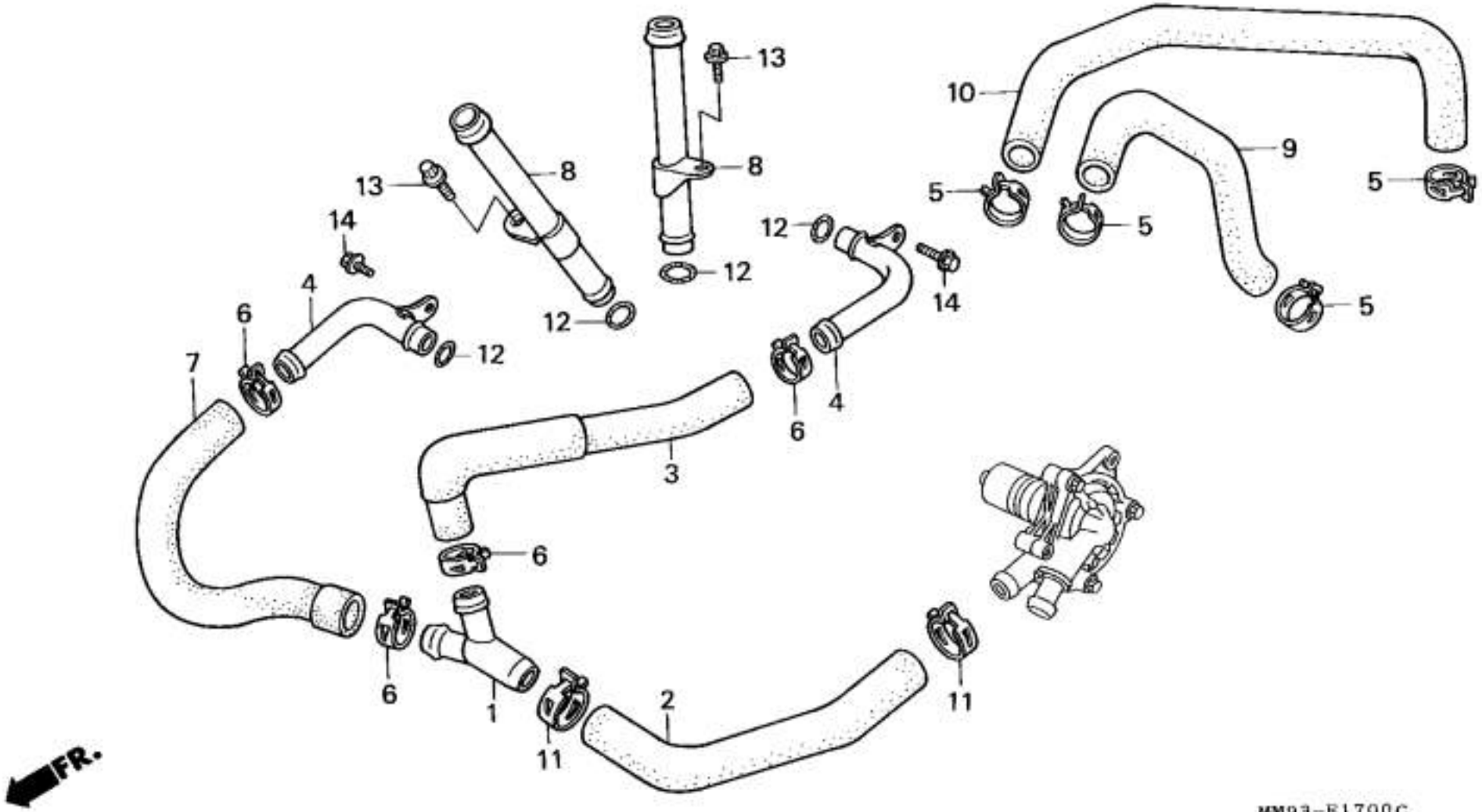

MM93-E1700C

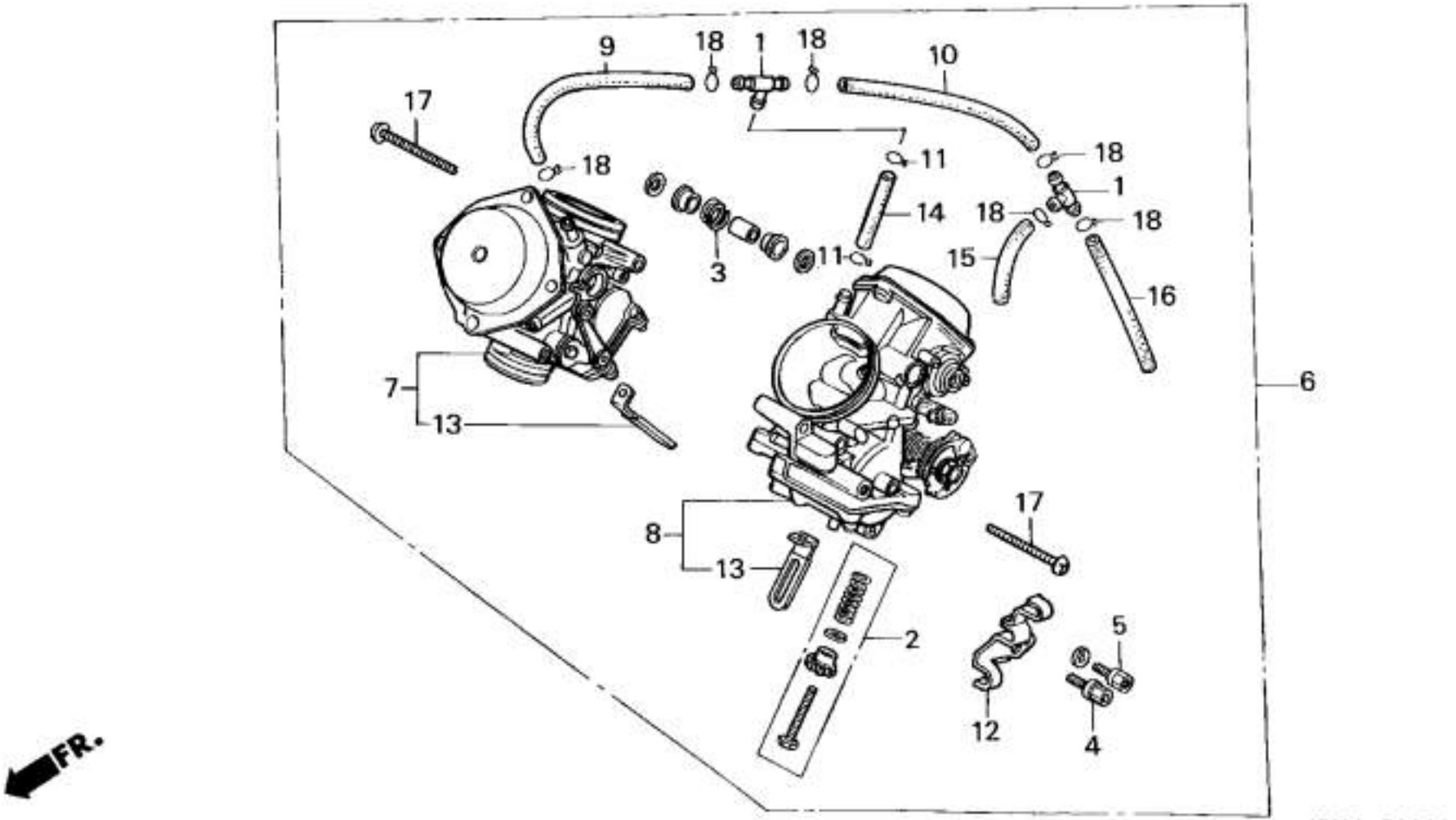

MM93-E1800

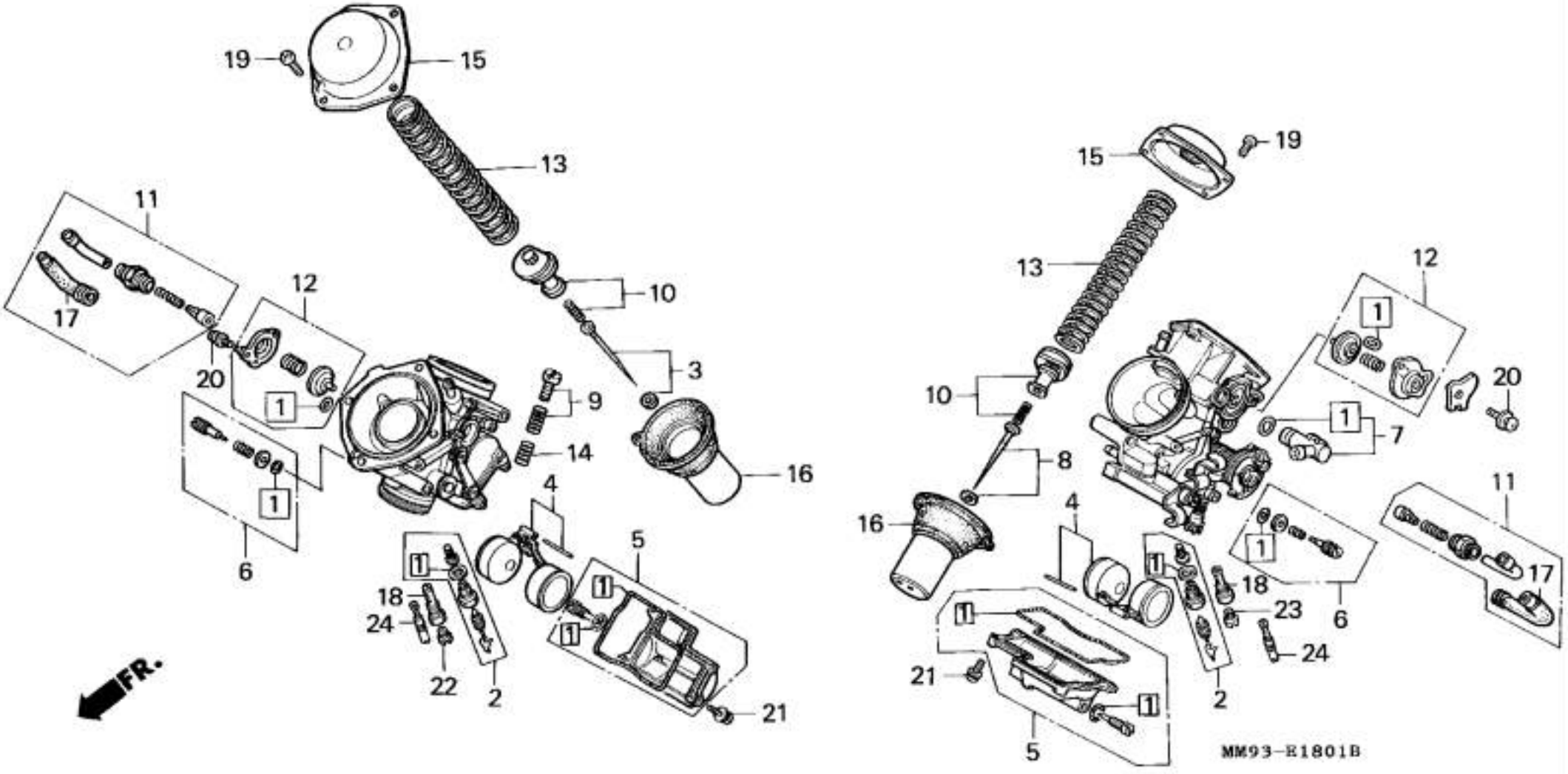

19
15
13
11
12
10
17
20
3
9
1
14
16
4
5
6
18
24
22
2
21
FR.
15
19
13
12
1
20
10
1
7
8
11
16
4
1
18
17
23
6
1
24
21
2
1
5
MM93-E1801B

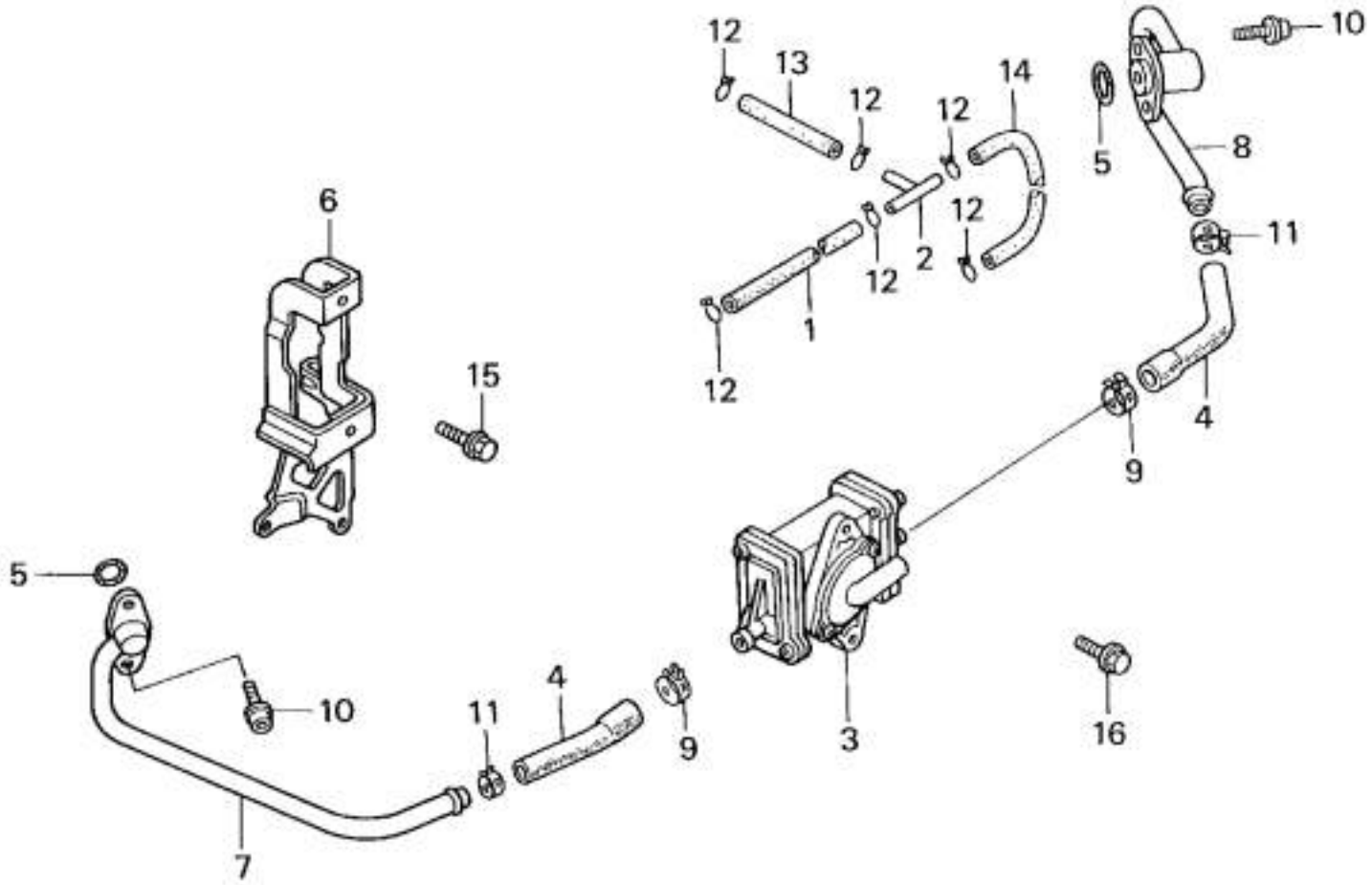

MM93-E1900

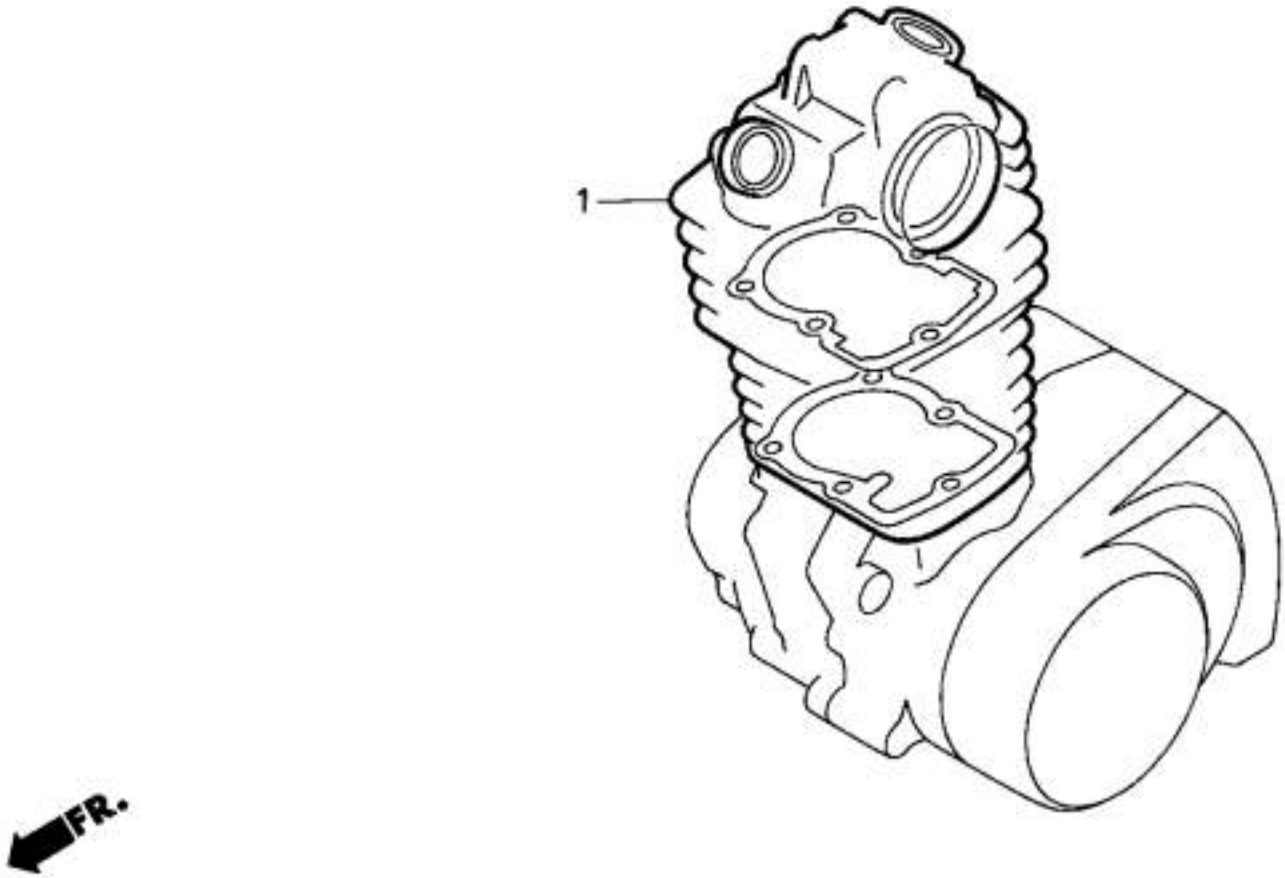

ENG1– X0001

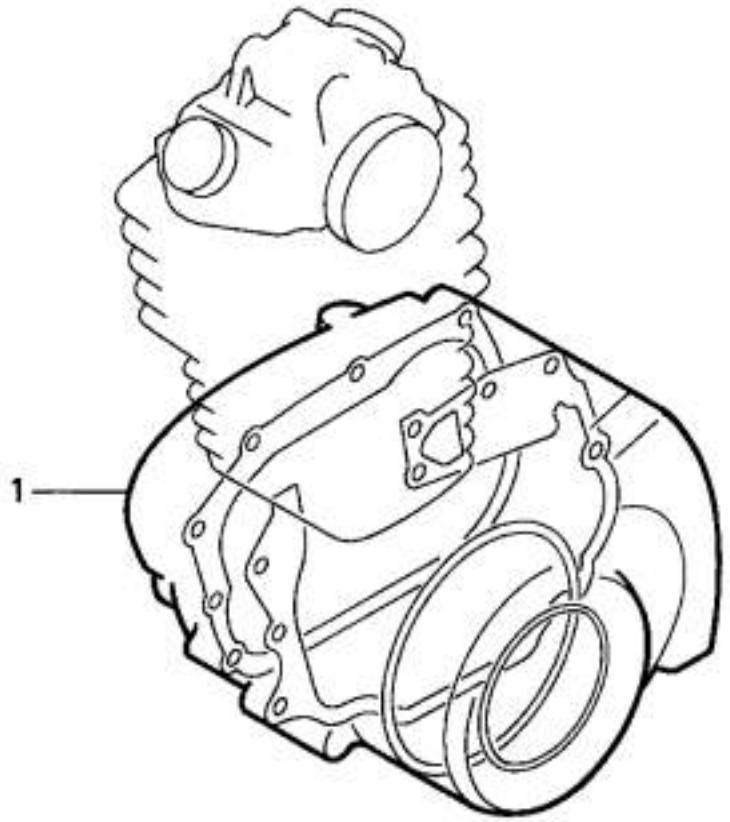

FR.

ENG2– X0001

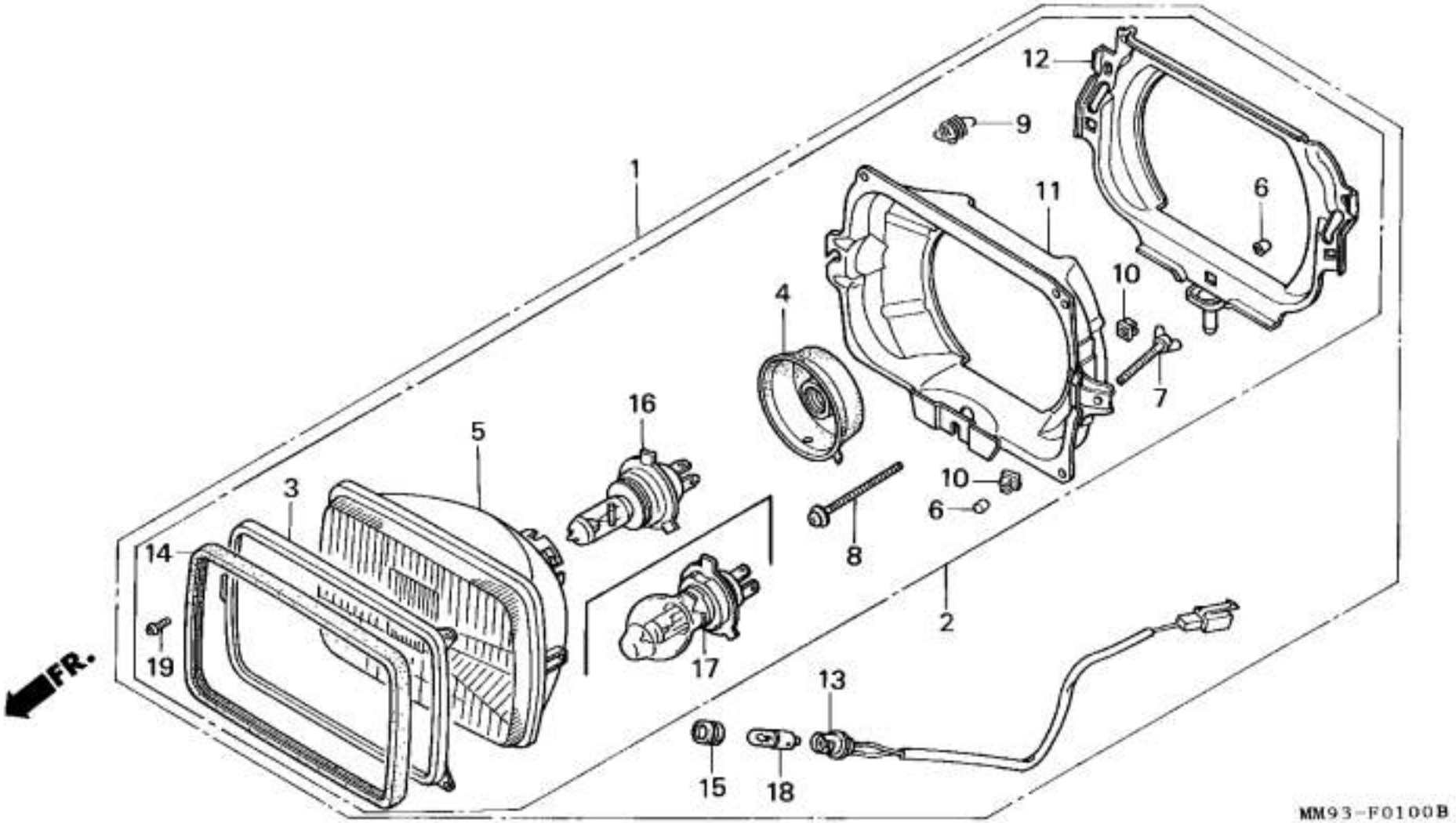
1
2
3
4
5
6
7
8
9
10
10
11
12
13
14
15
16
17
18
19
FR.
MM93-F0100B

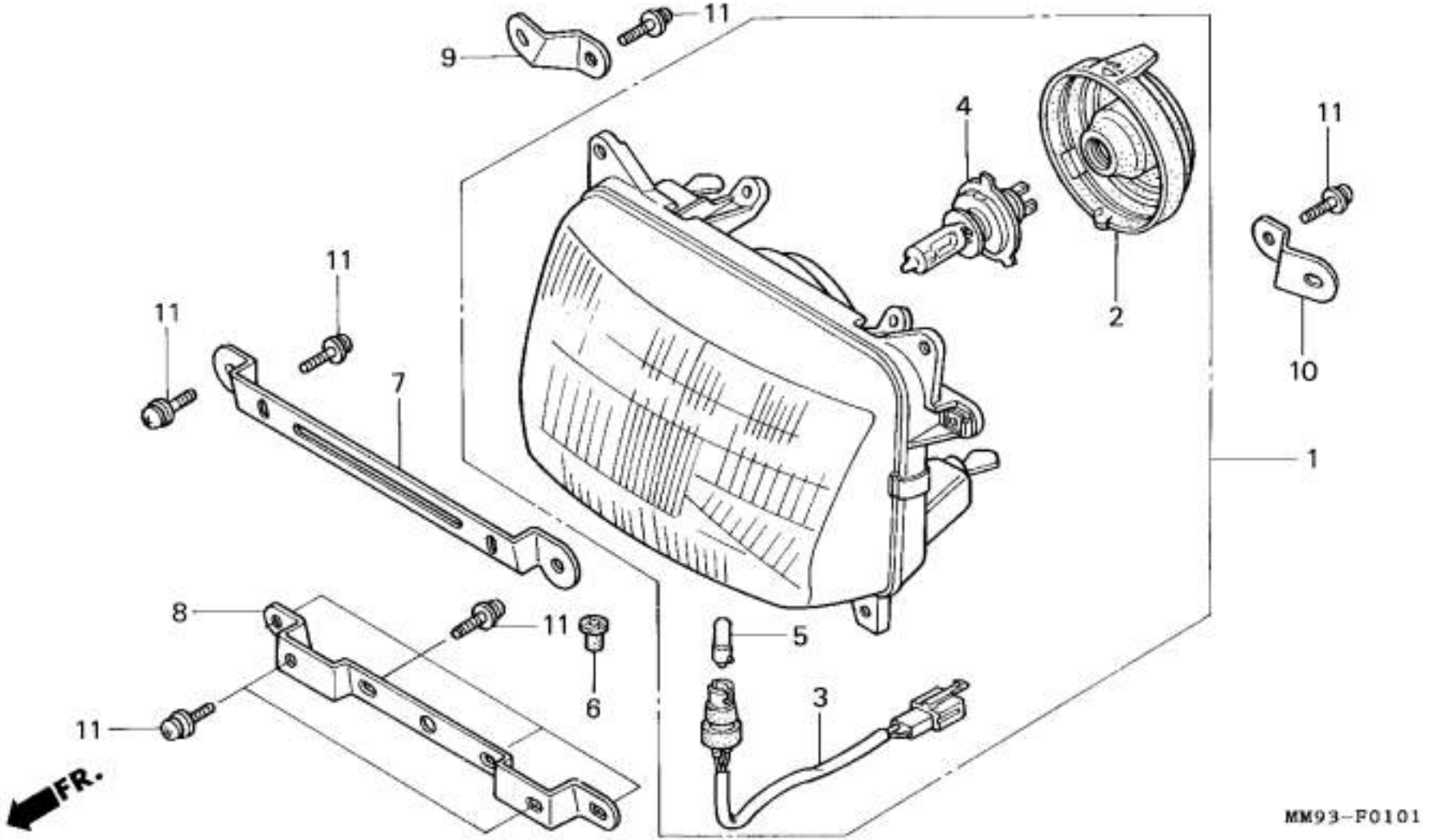

11
9
4
11
2
10
11
11
7
1
8
11
5
6
3
11
FR.
MM93-F0101

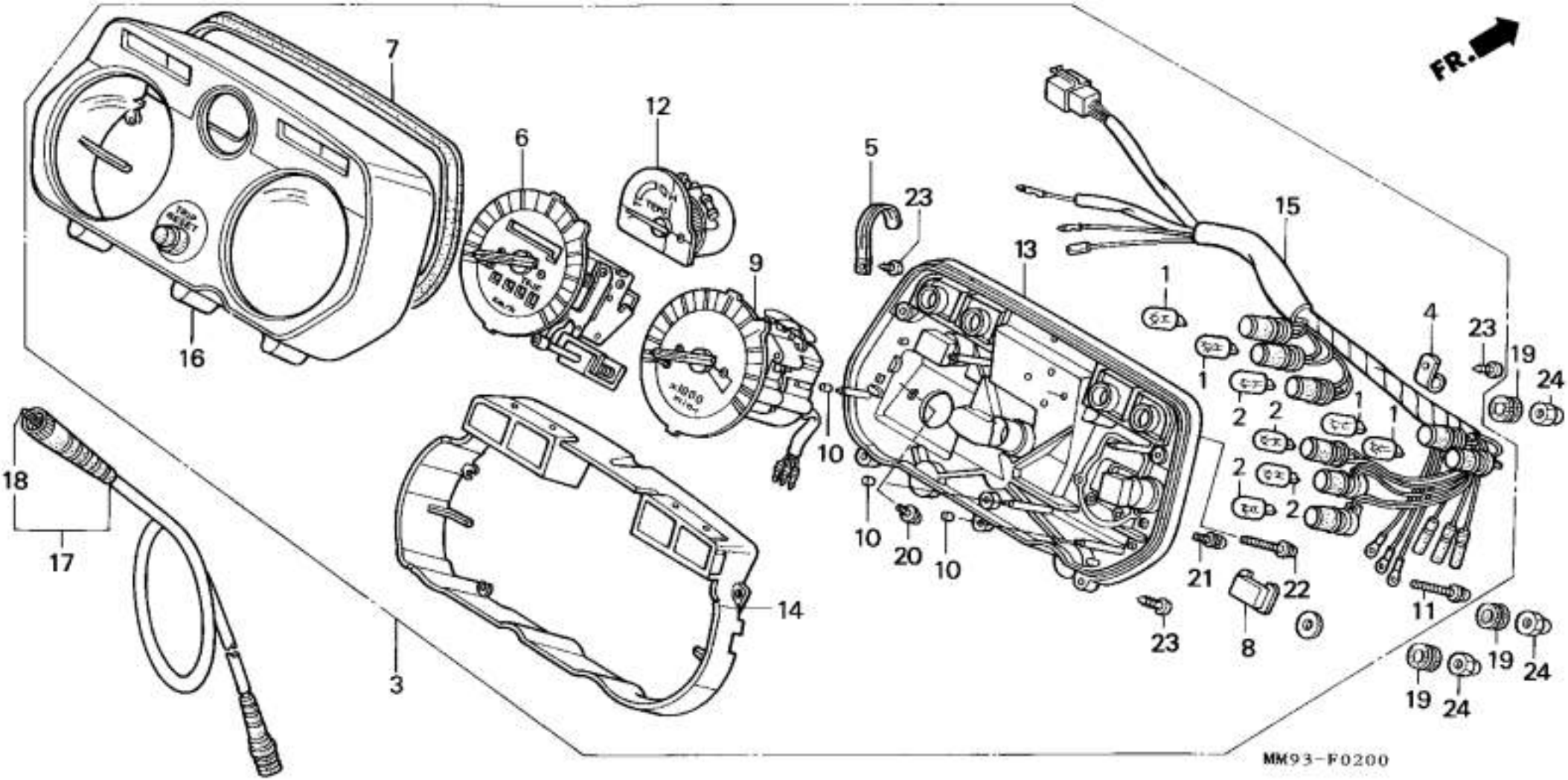
FR.
MM93-F0200

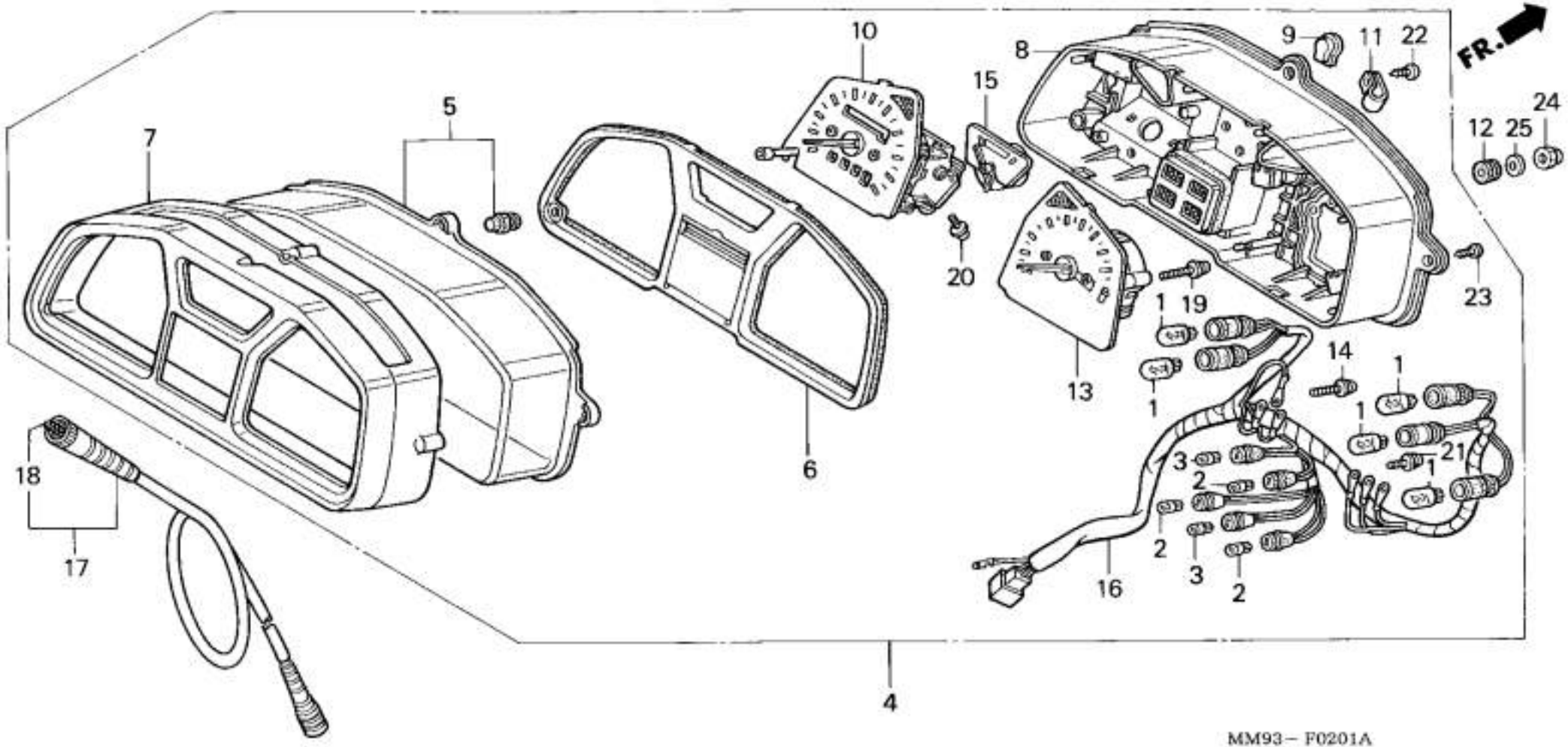
FR.
1
2
3
4
5
6
7
8
9
10
11
12
13
14
15
16
17
18
19
20
21
22
23
24
25
MM93 – F0201A

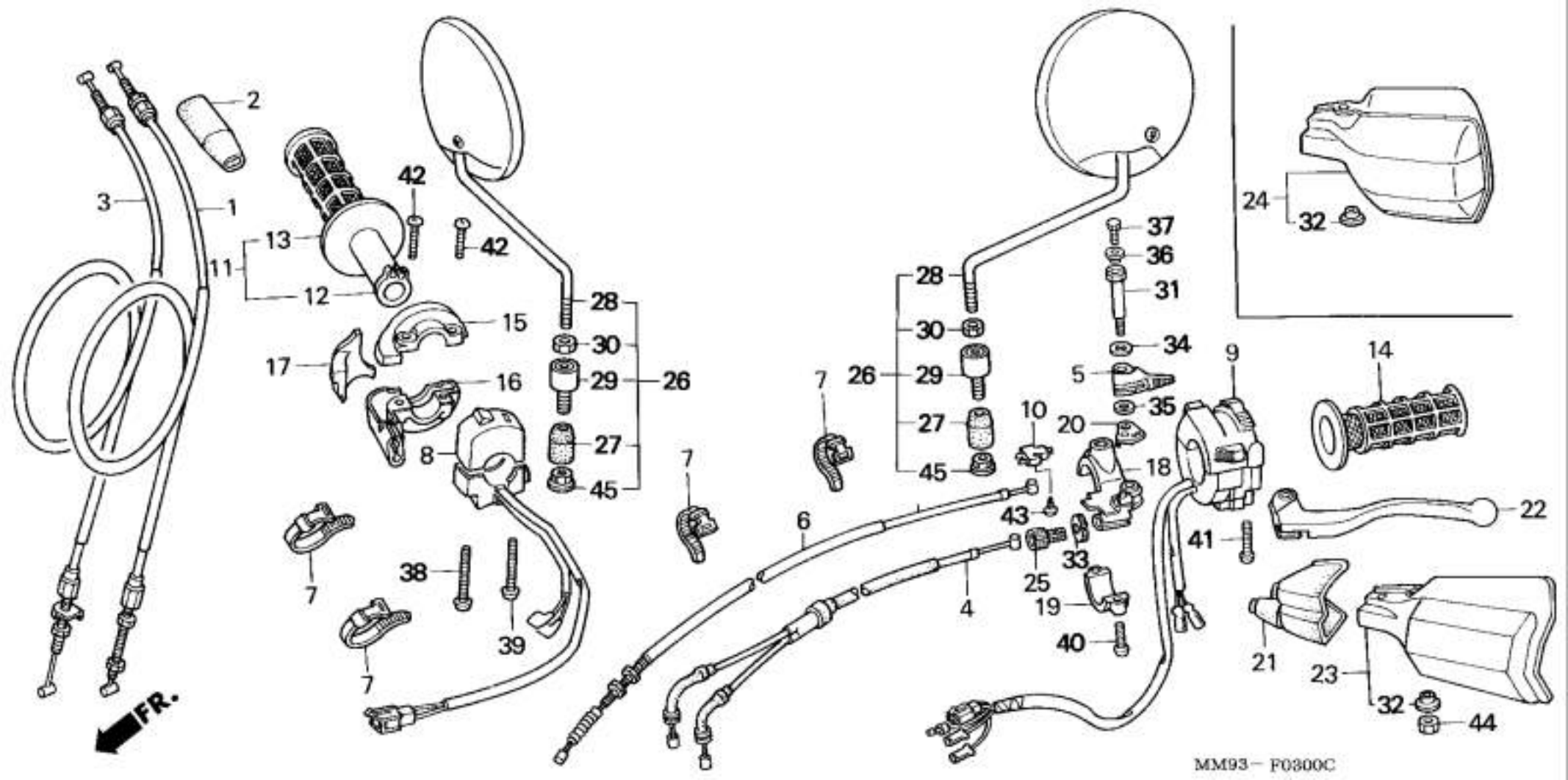
FR.
MM93 – F0300C

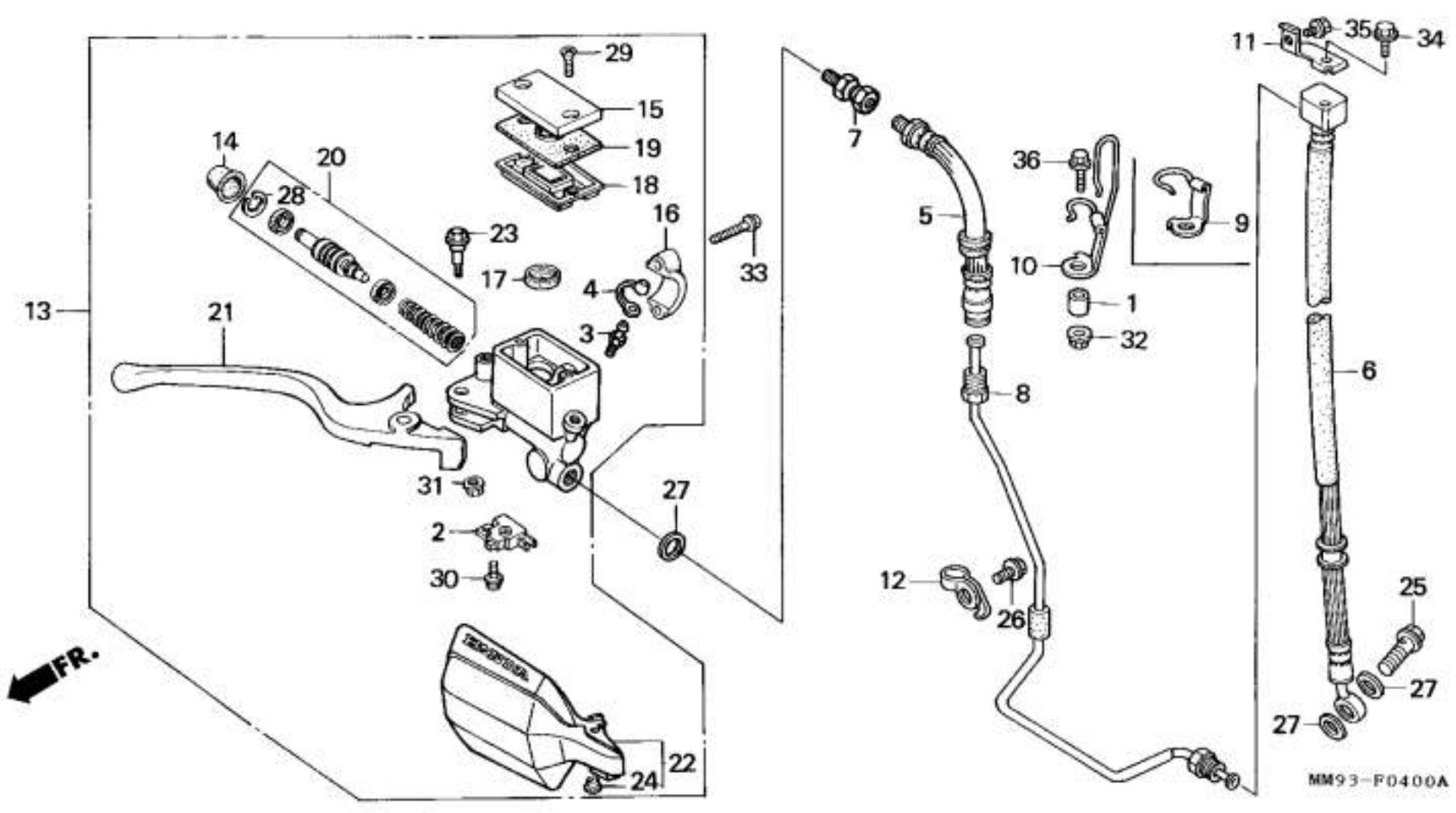

29
15
19
18
14
20
28
23
16
17
4
3
33
13
21
31
27
2
30
FR.
22
24
7
5
36
9
10
1
32
8
12
26
11
35
34
6
25
27
27
MM93-F0400A

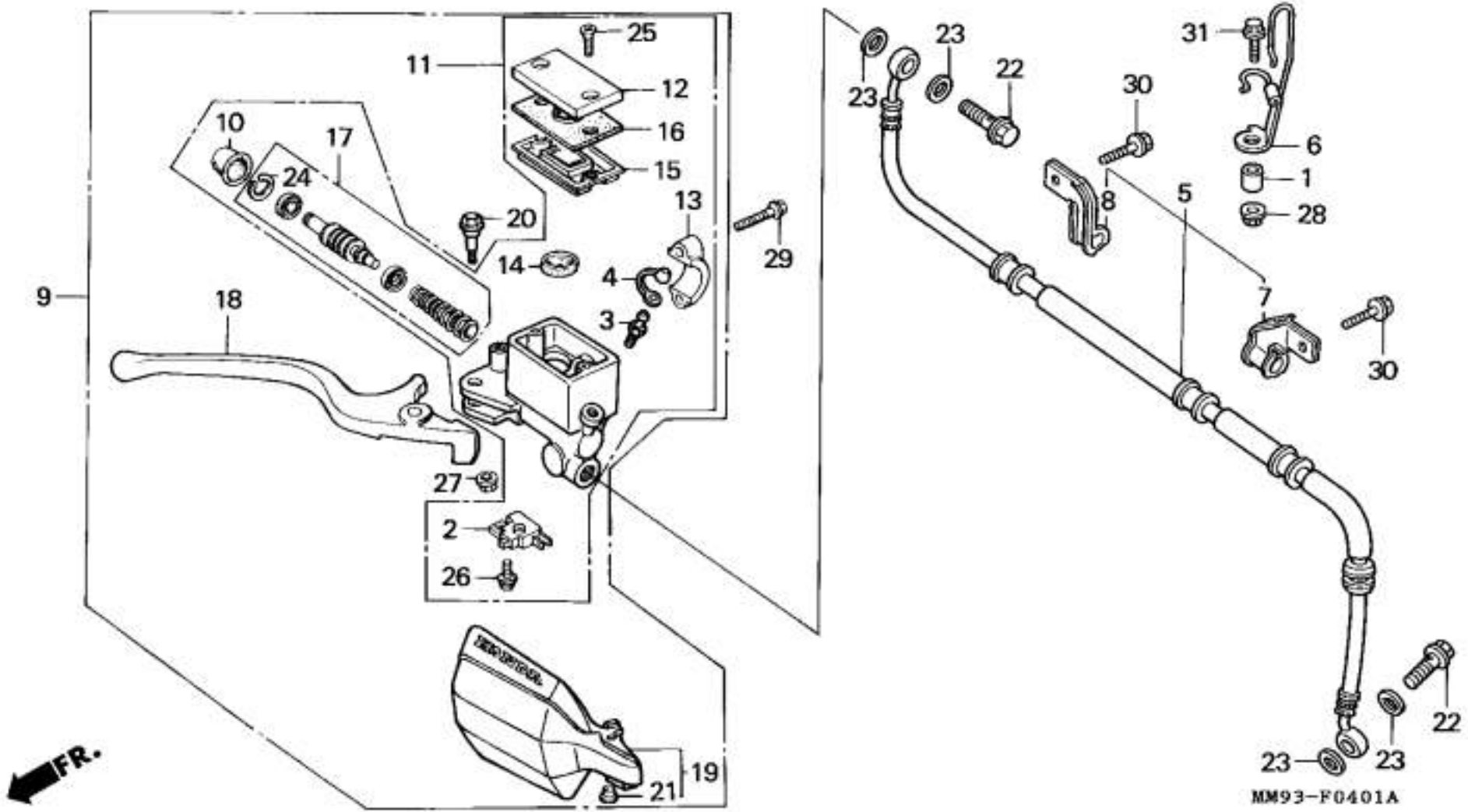
25
11
12
16
15
10
17
24
20
14
13
29
9
18
4
3
27
2
26
21
19
FR.
23
22
31
30
6
1
28
8
5
7
30
23
23
22
MM93-F0401A

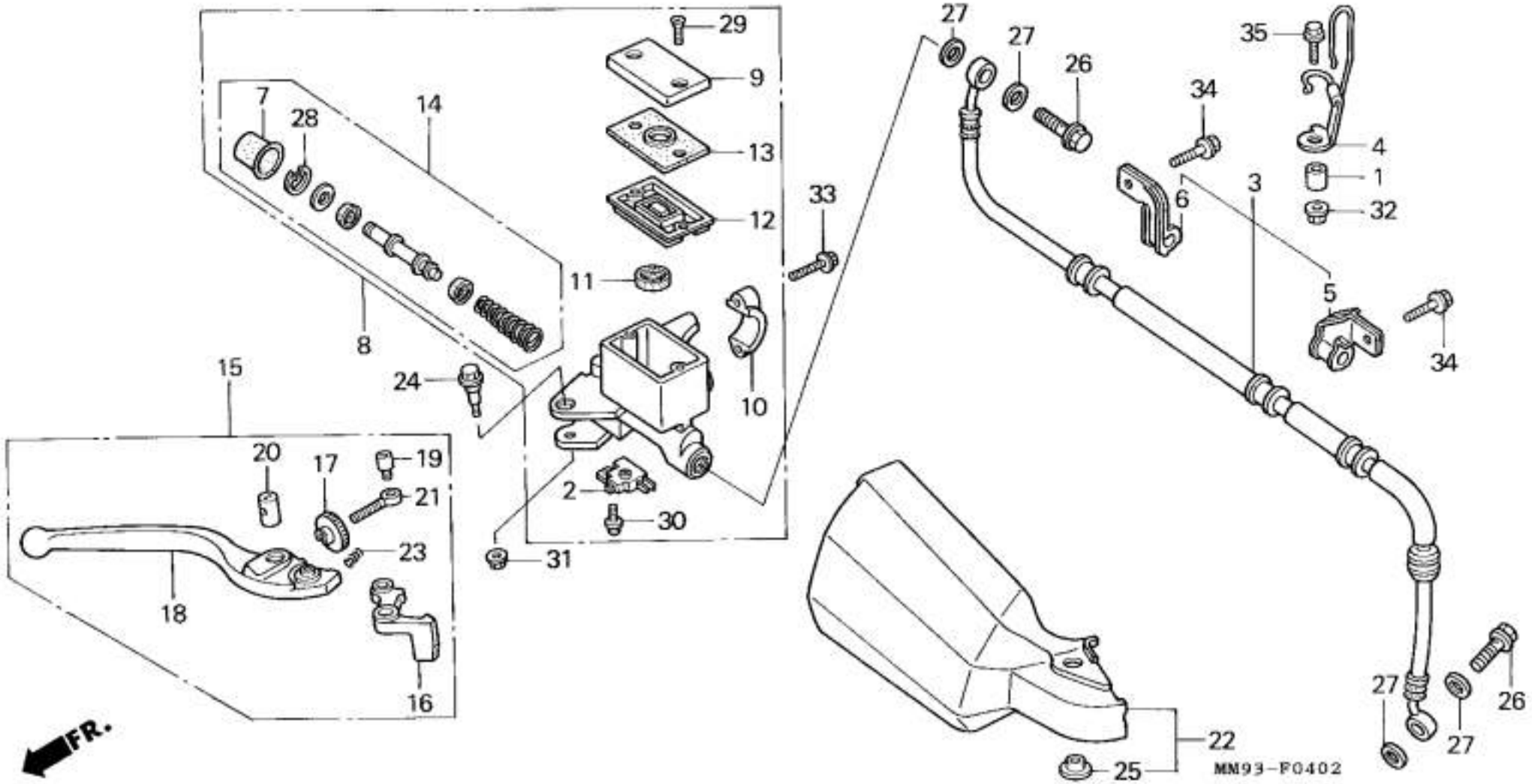
1
2
3
4
5
6
7
8
9
10
11
12
13
14
15
16
17
18
19
20
21
22
23
24
25
26
27
28
29
30
31
32
33
34
35
FR.
MM93-F0402

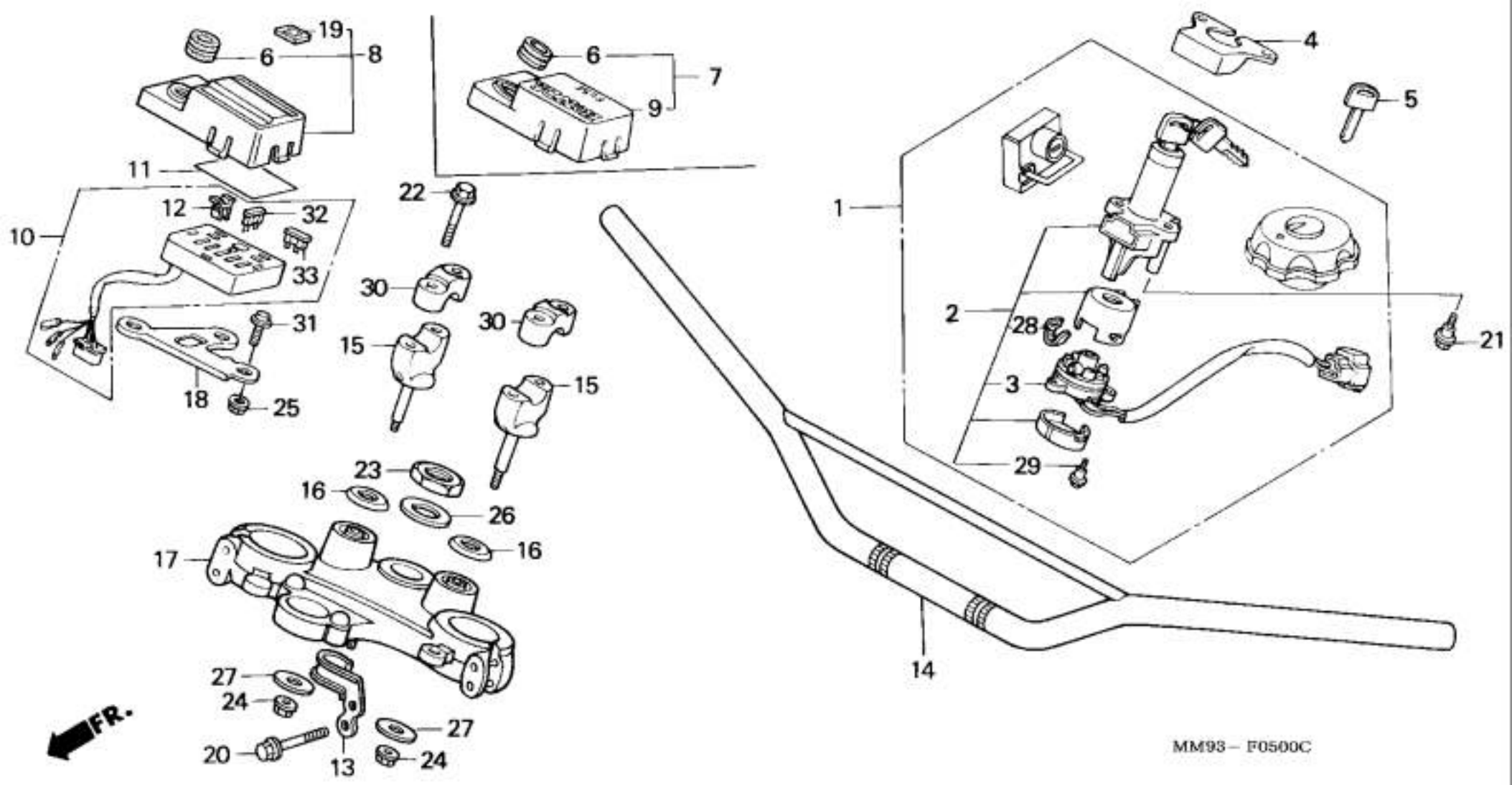
19
6
8
11
12
32
33
10
31
18
25
6
7
9
22
30
15
30
15
23
16
26
16
17
27
24
20
13
27
24
FR.
4
5
1
2
28
21
3
29
14
MM93 – F0500C

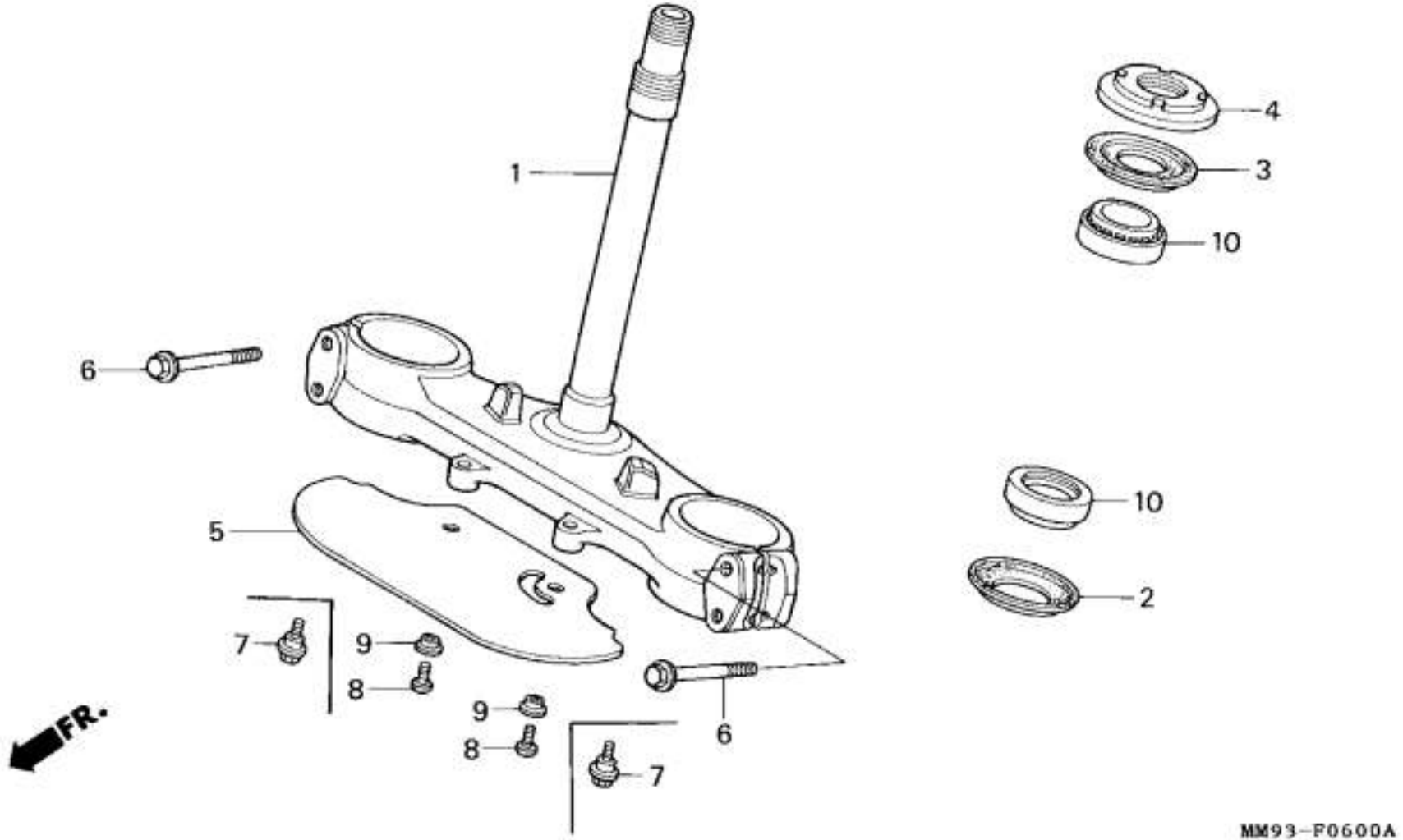
1
2
3
4
5
6
6
7
7
8
8
9
9
10
10
FR.
MM93-F0600A

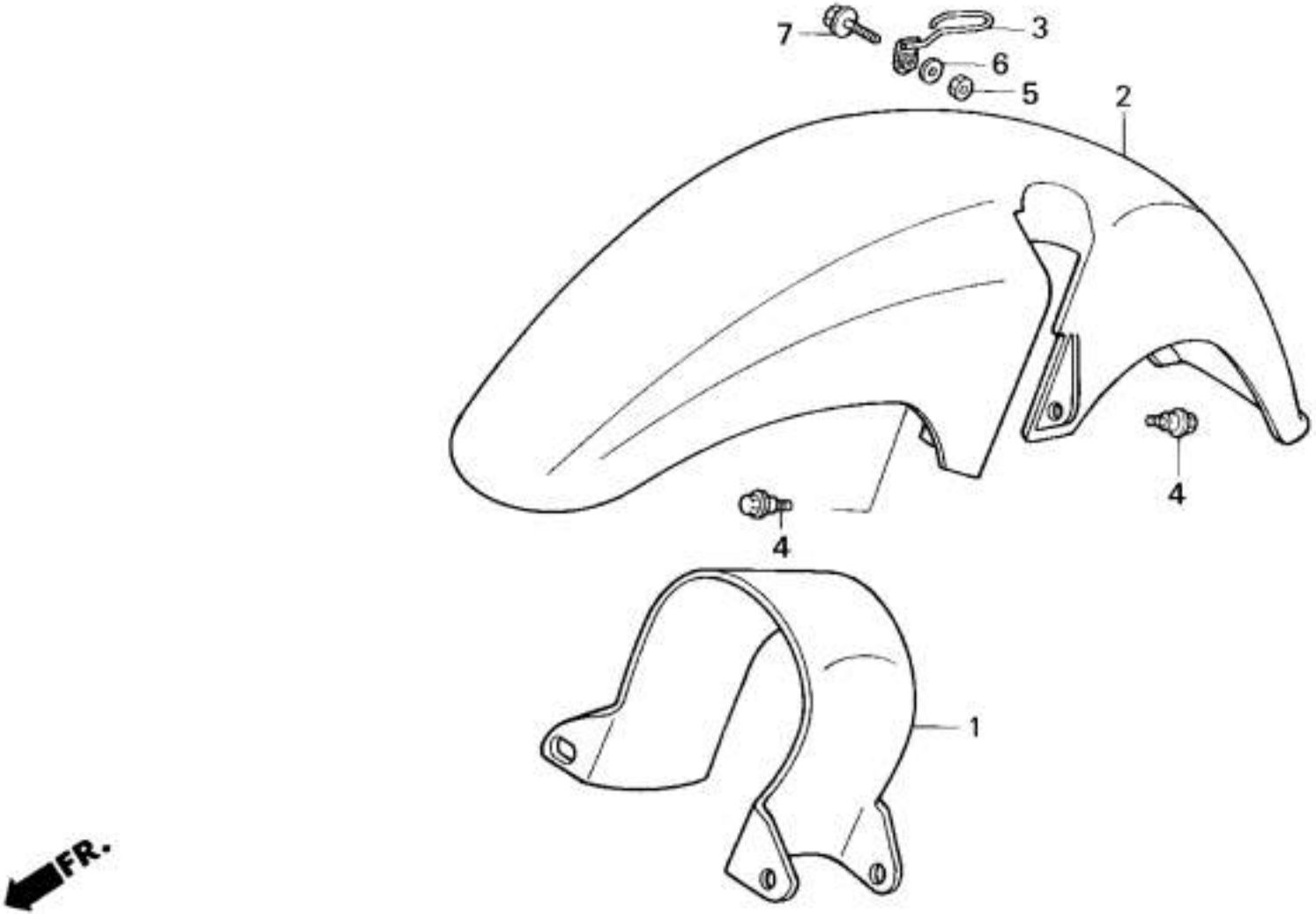

MM93-F0700C

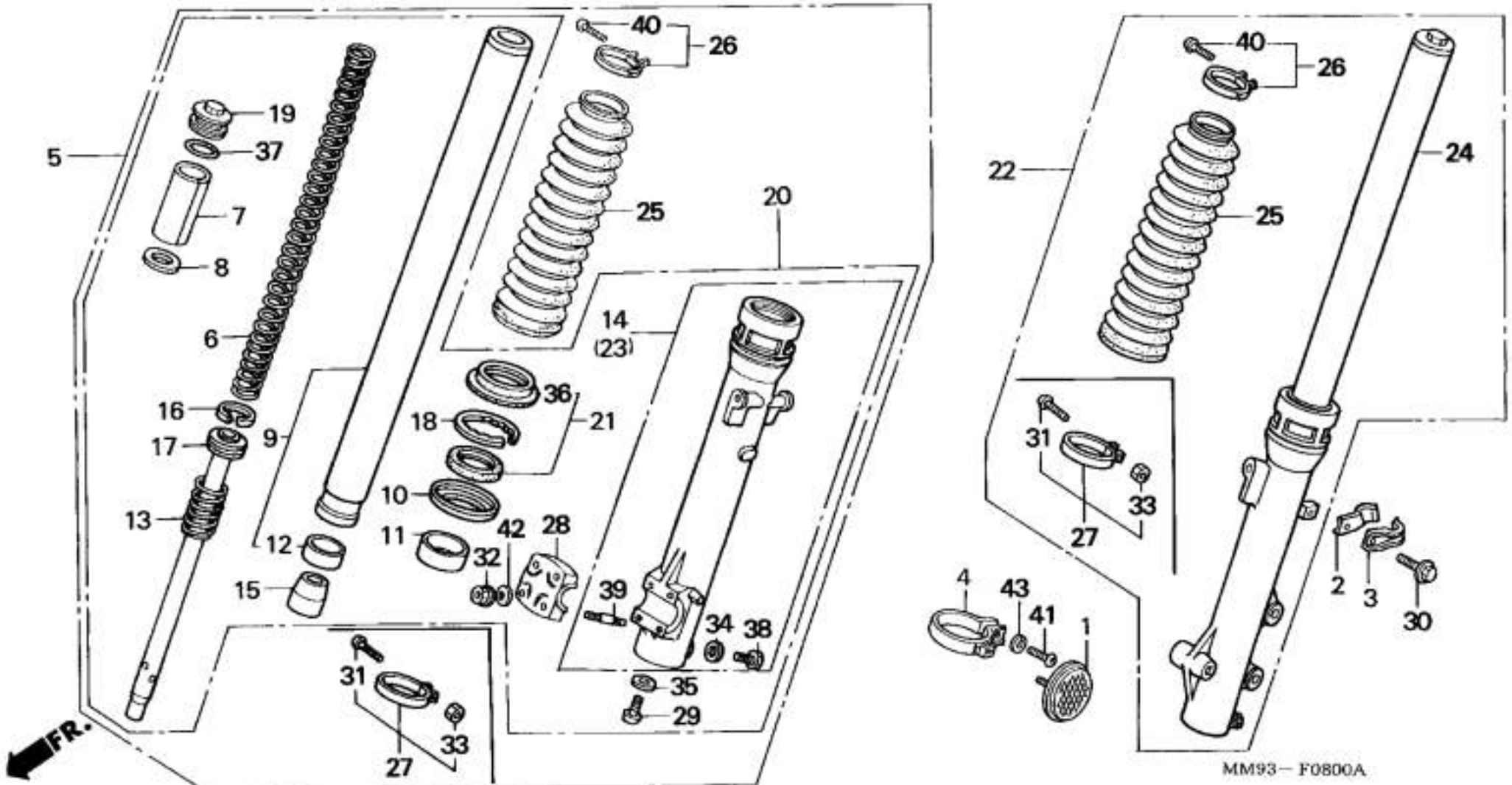

5
19
37
7
8
6
16
17
13
9
12
15
40
26
25
20
14
(23)
36
18
21
10
11
42
28
32
39
34
38
35
29
31
27
33
FR.
22
24
4
43
41
1
2
3
30
MM93— F0800A

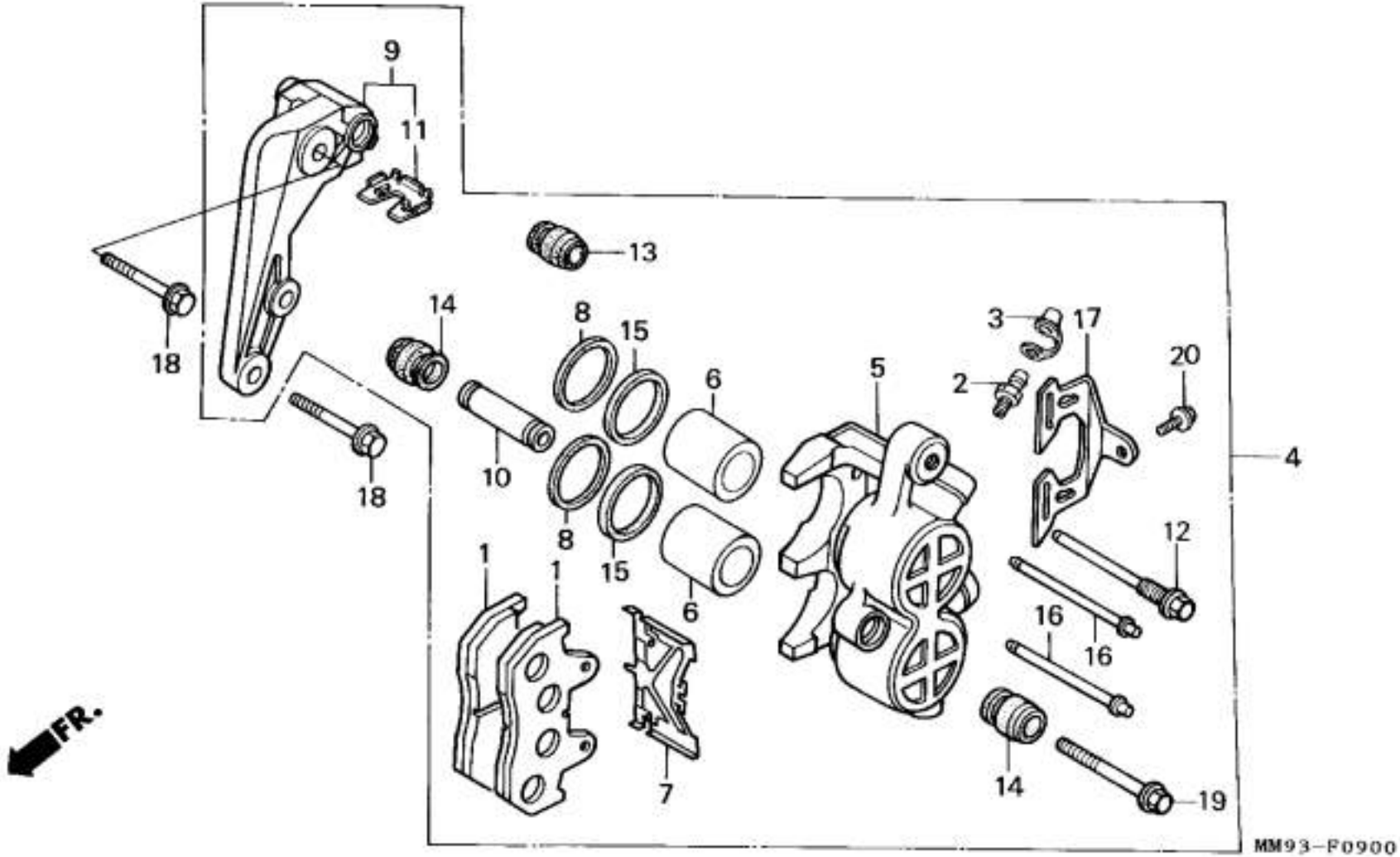
9
11
13
14
8
15
6
5
3
17
20
2
4
18
18
10
8
15
6
12
1
1
16
16
7
14
19
FR.
MM93-F0900

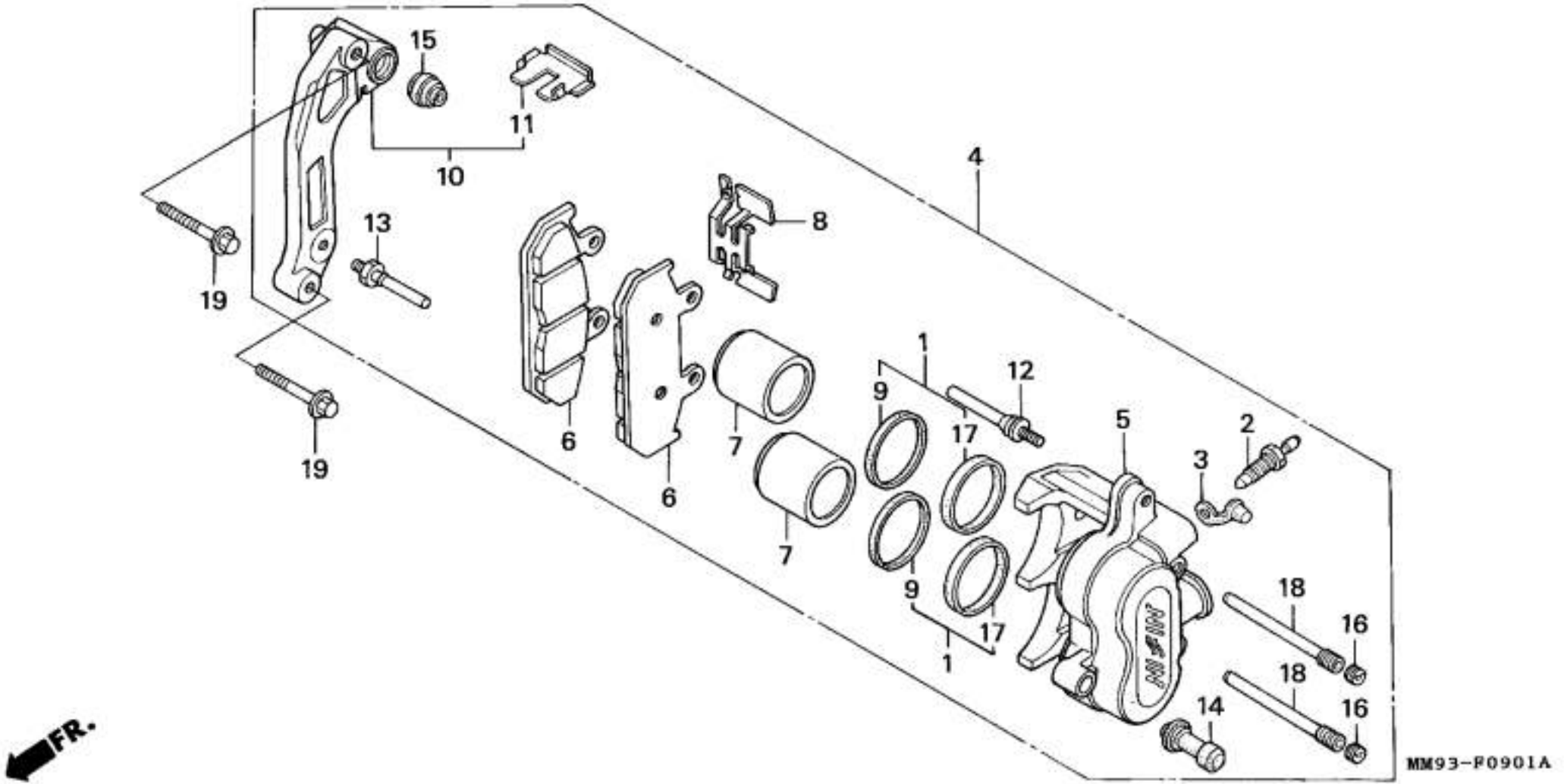
15
11
10
4
19
13
8
19
6
6
7
7
1
9
12
17
5
2
3
9
17
1
18
16
18
16
14
FR.
MM93-P0901A

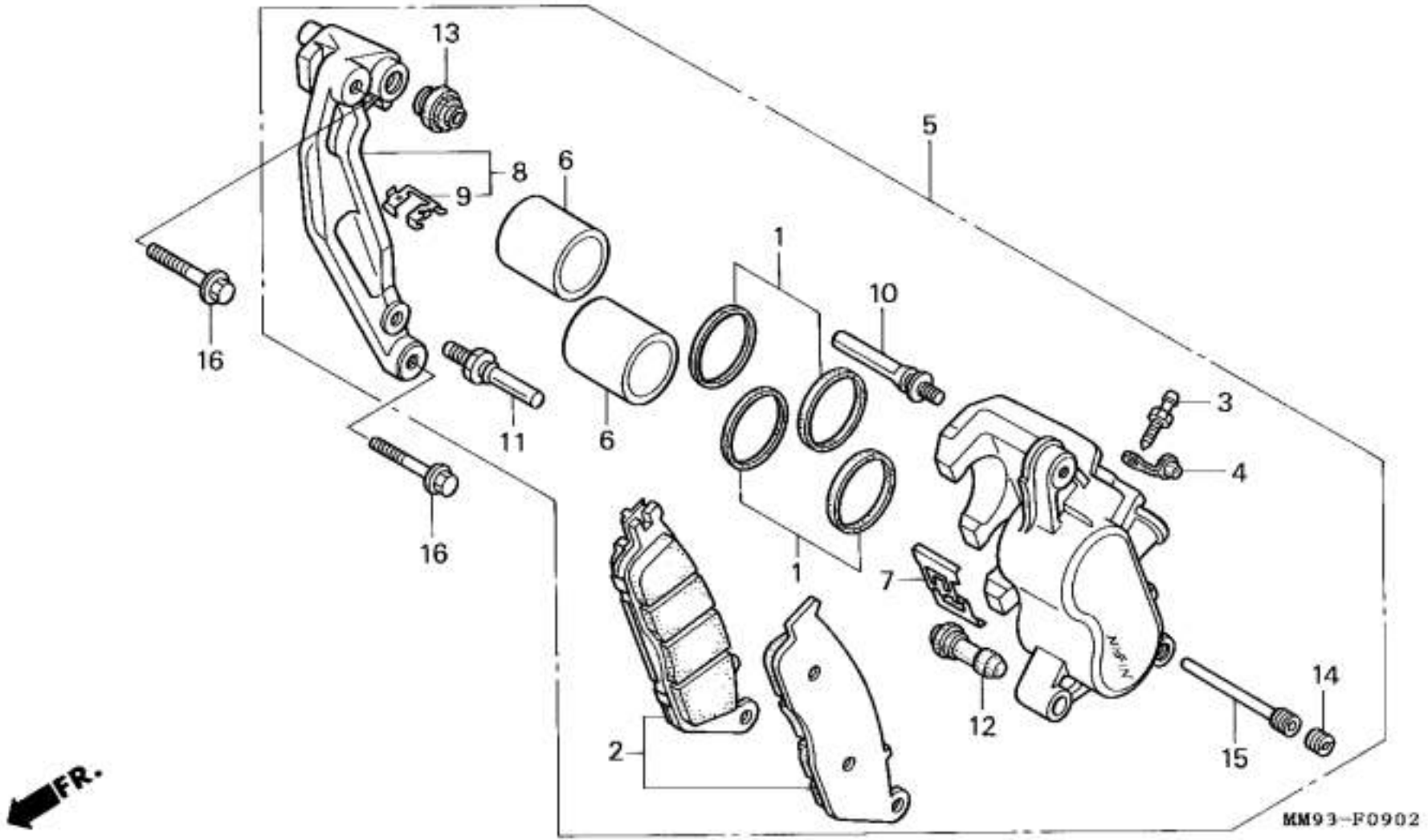
13
5
8
6
9
1
10
16
3
11
6
4
16
1
7
12
14
2
15
FR.
MM93-F0902

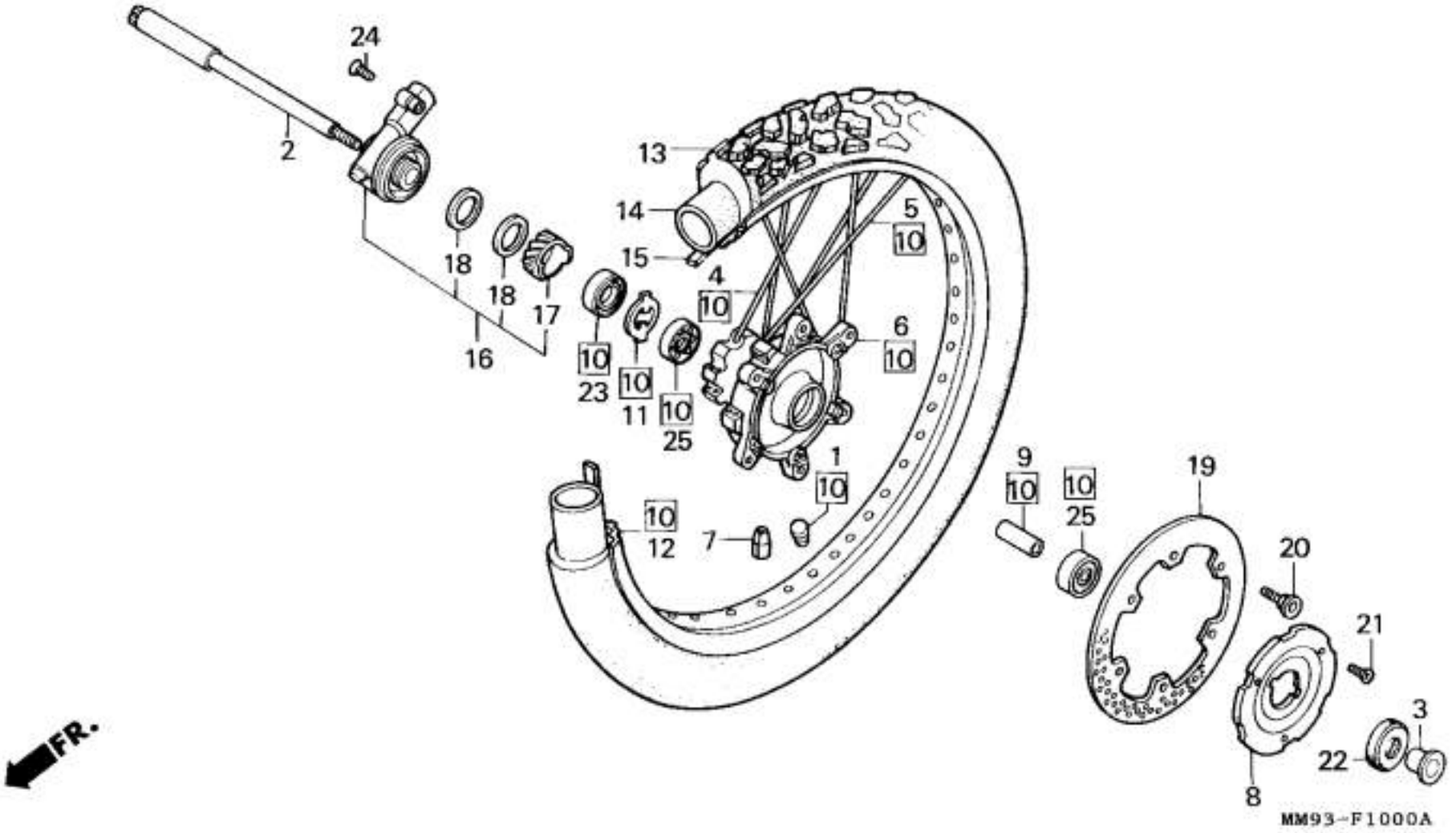
24
2
18
18
17
16
13
14
15
4
10
5
10
6
10
10
23
10
11
10
25
1
10
10
12
7
9
10
10
25
19
20
21
3
22
8
FR.
MM93-F1000A

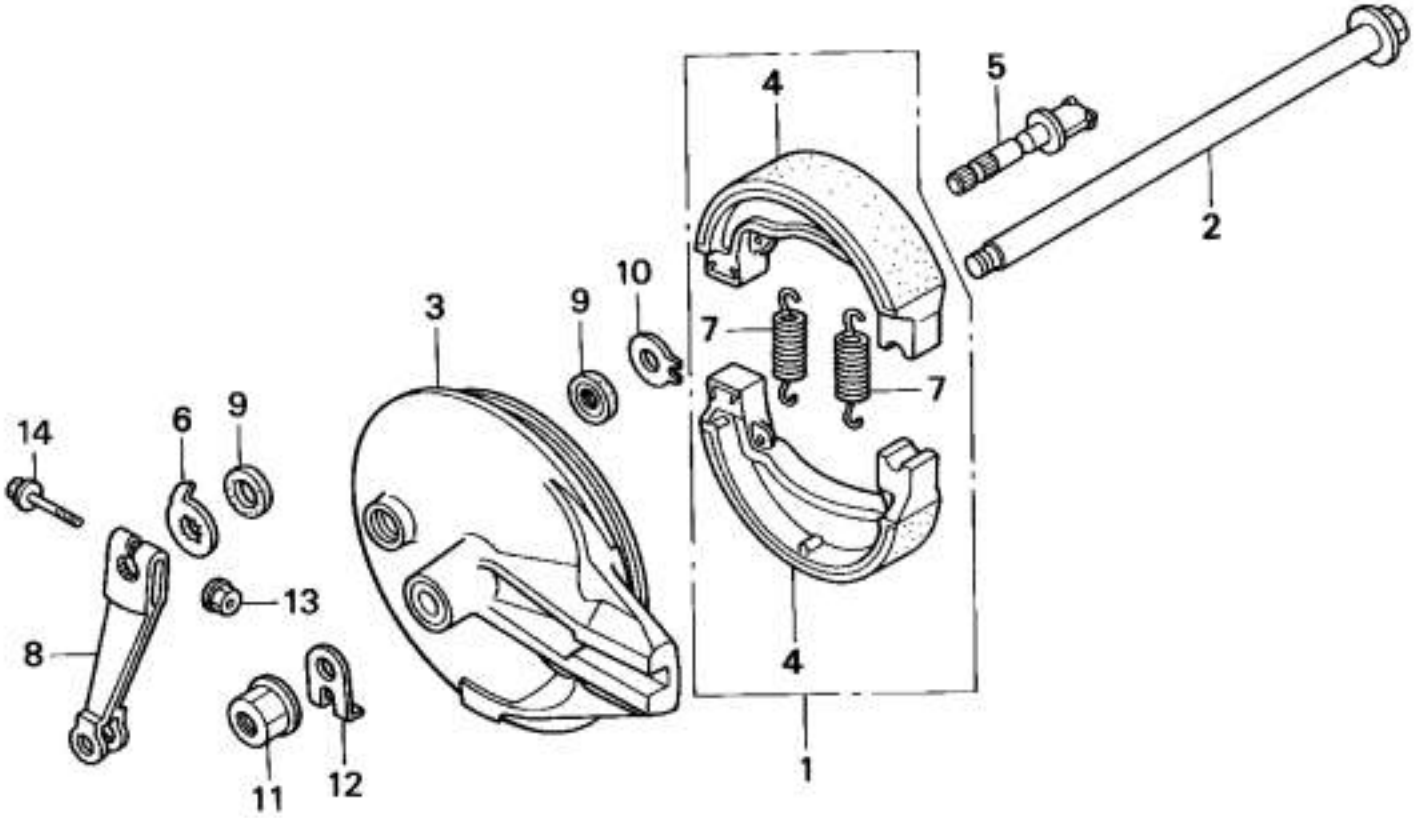

MM93-F1100A

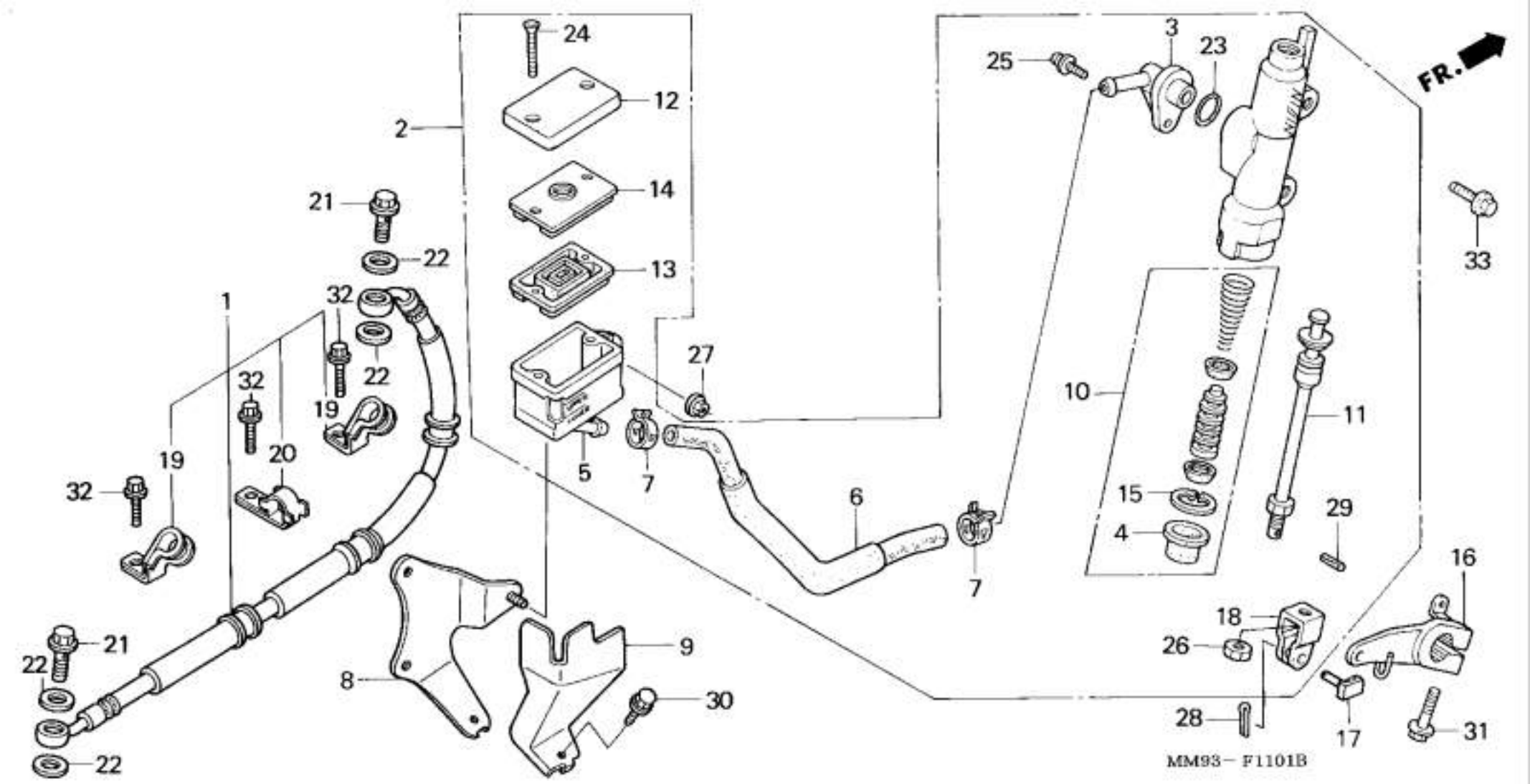
FR.
MM93 – F1101B

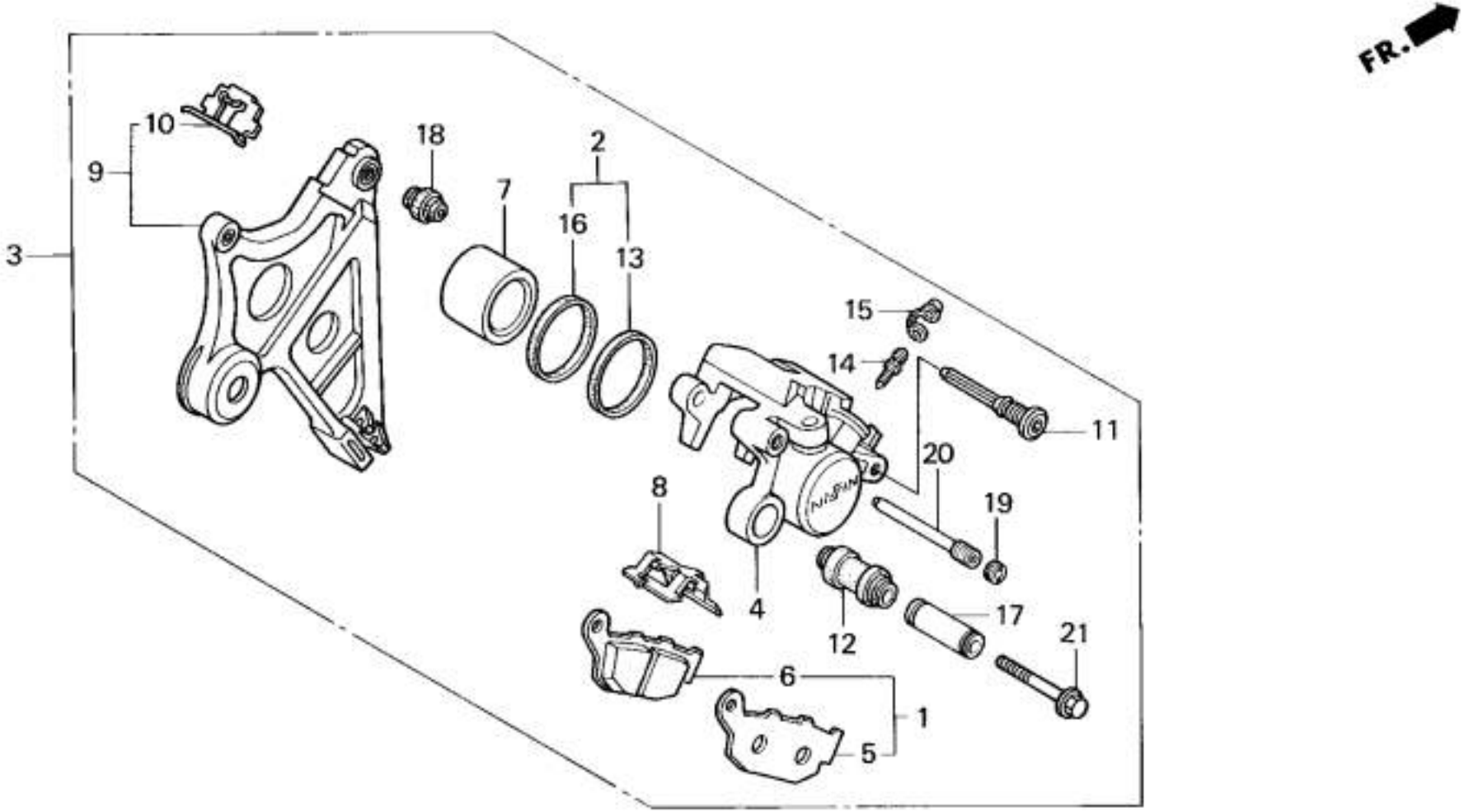
FR.
10
9
3
18
2
7
16
13
15
14
11
20
19
8
4
12
17
21
6
1
5
NISSIN
MM93-F1102B

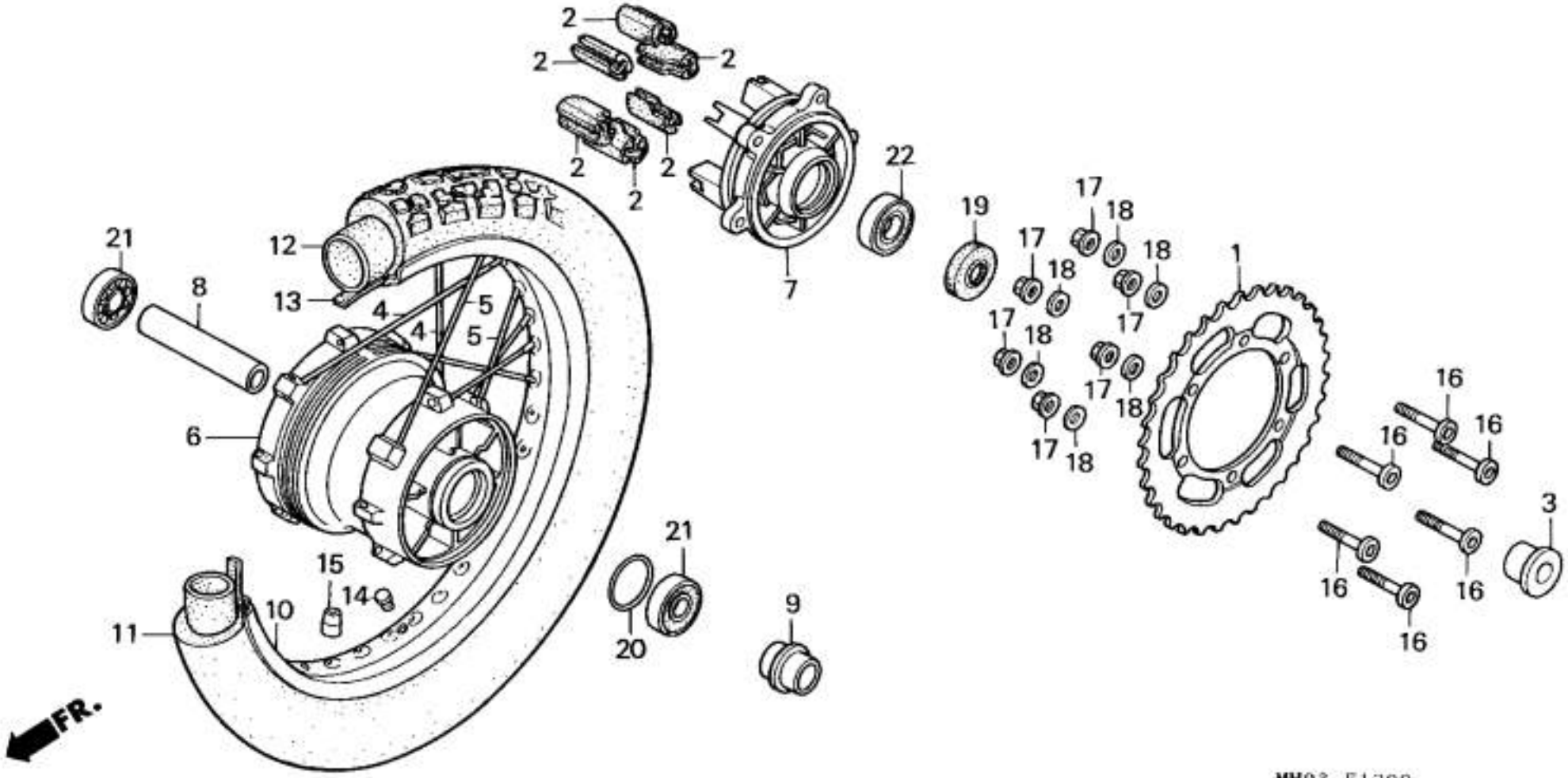
2
2
2
2
2
2
22
7
19
17
18
1
16
3
21
8
12
13
4
5
6
15
14
10
11
21
20
9
FR.
MM93-F1200

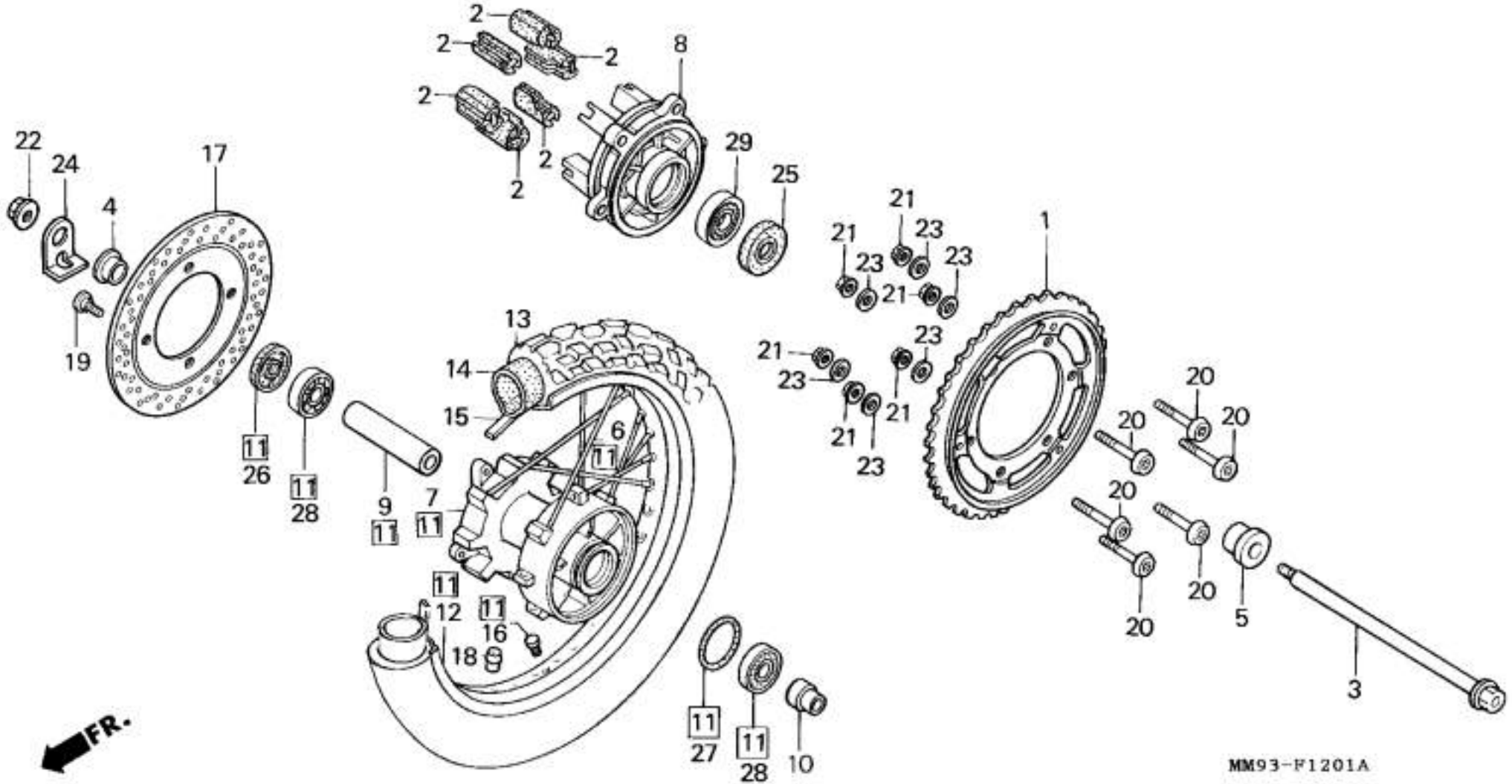

2
2
2
2
2
2
8
29
25
22
24
4
17
19
21
23
21
23
23
21
1
13
14
15
6
11
11
26
11
28
9
11
7
11
11
12
11
16
18
20
20
20
20
20
20
5
3
11
27
11
28
10
FR.
MM93-F1201A

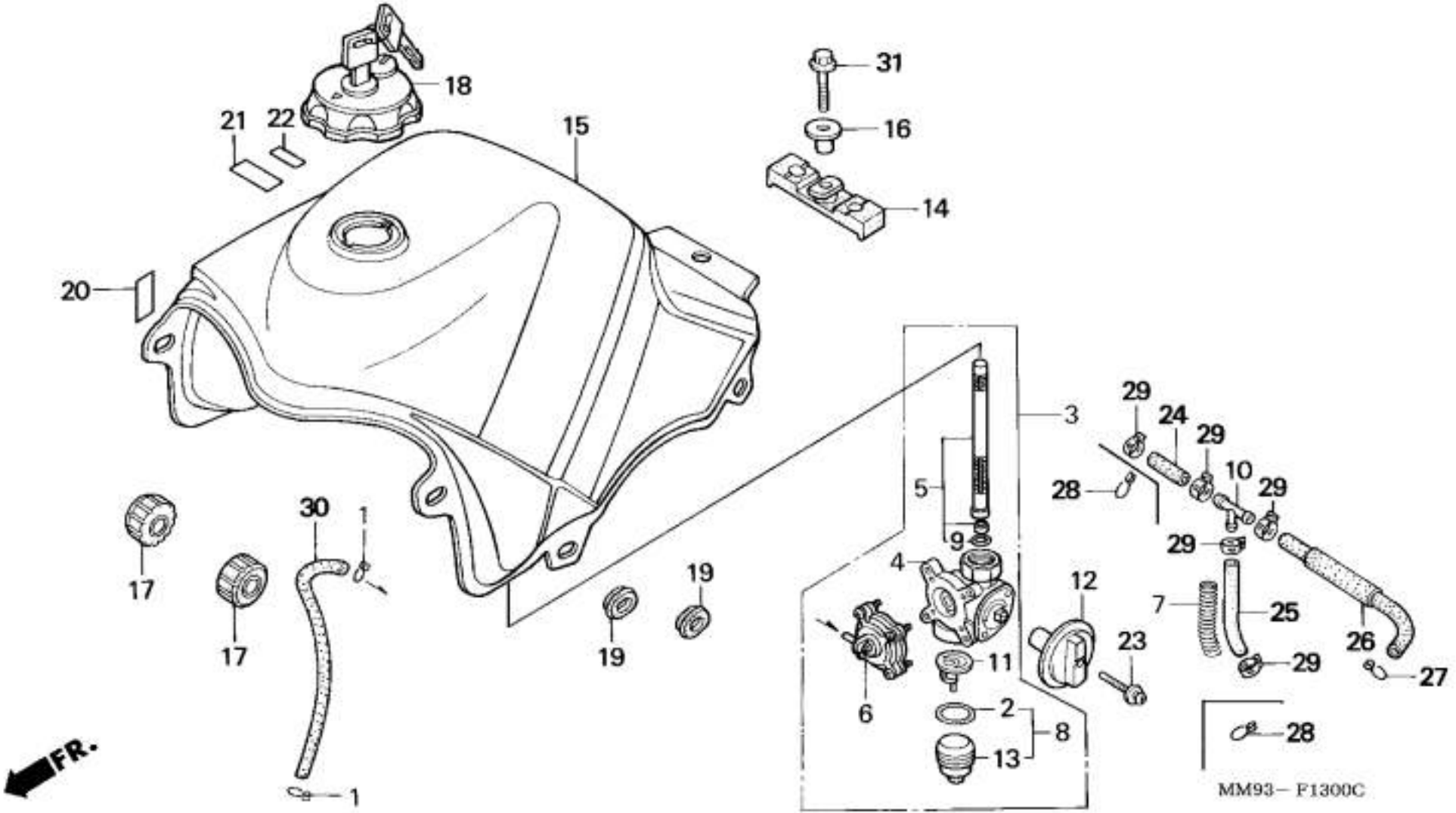

18
21
22
15
31
16
14
20
3
29
24
29
10
29
28
5
9
4
29
12
7
25
26
27
29
23
11
6
2
8
13
28
30
1
17
17
19
19
1
FR.
MM93– F1300C

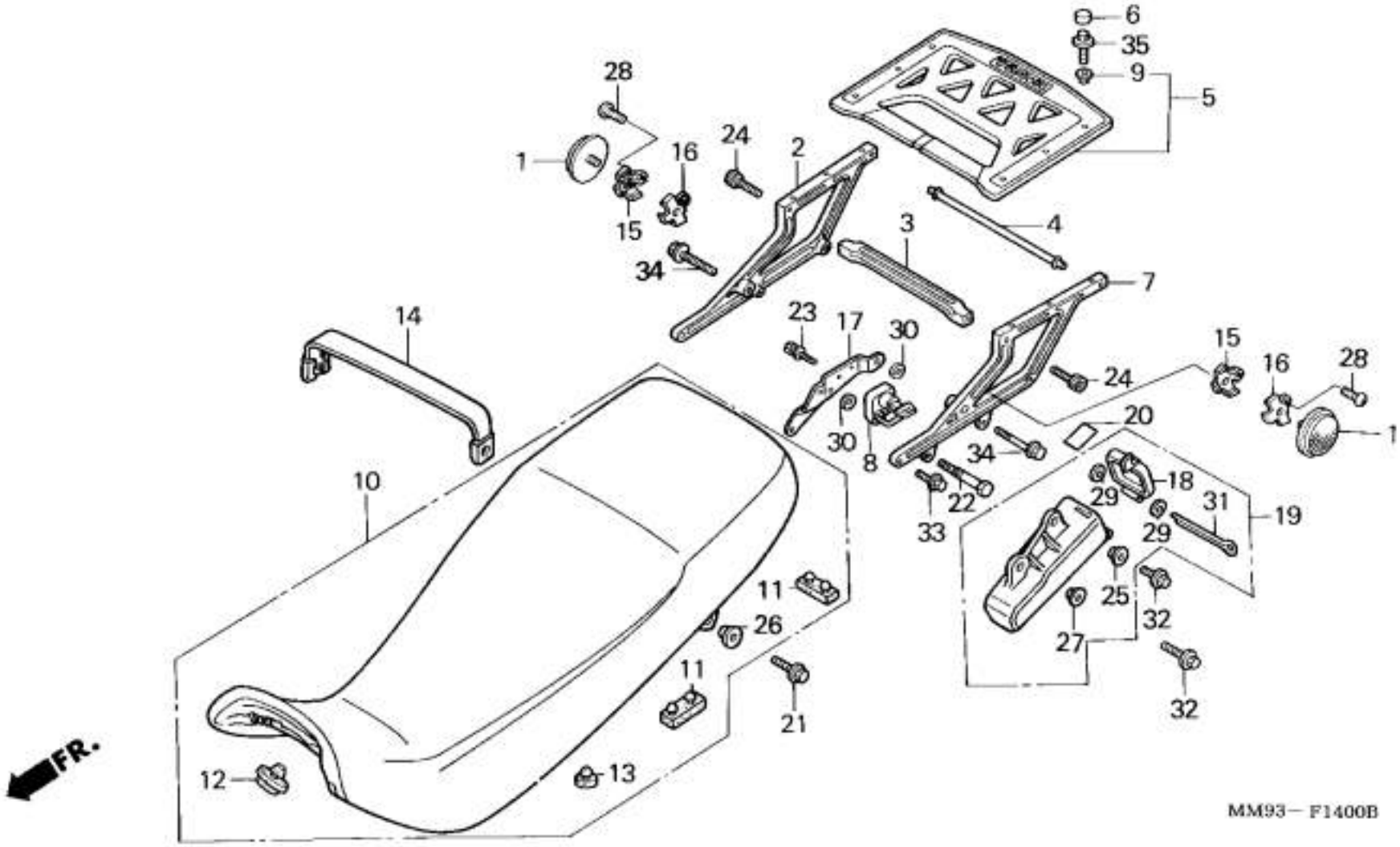

6
35
9
5
28
1
16
24
2
15
3
4
34
7
14
23
17
30
15
16
28
24
20
1
30
8
34
18
10
22
29
31
19
33
29
11
25
26
32
27
11
21
32
FR.
12
13
MM93— F1400B

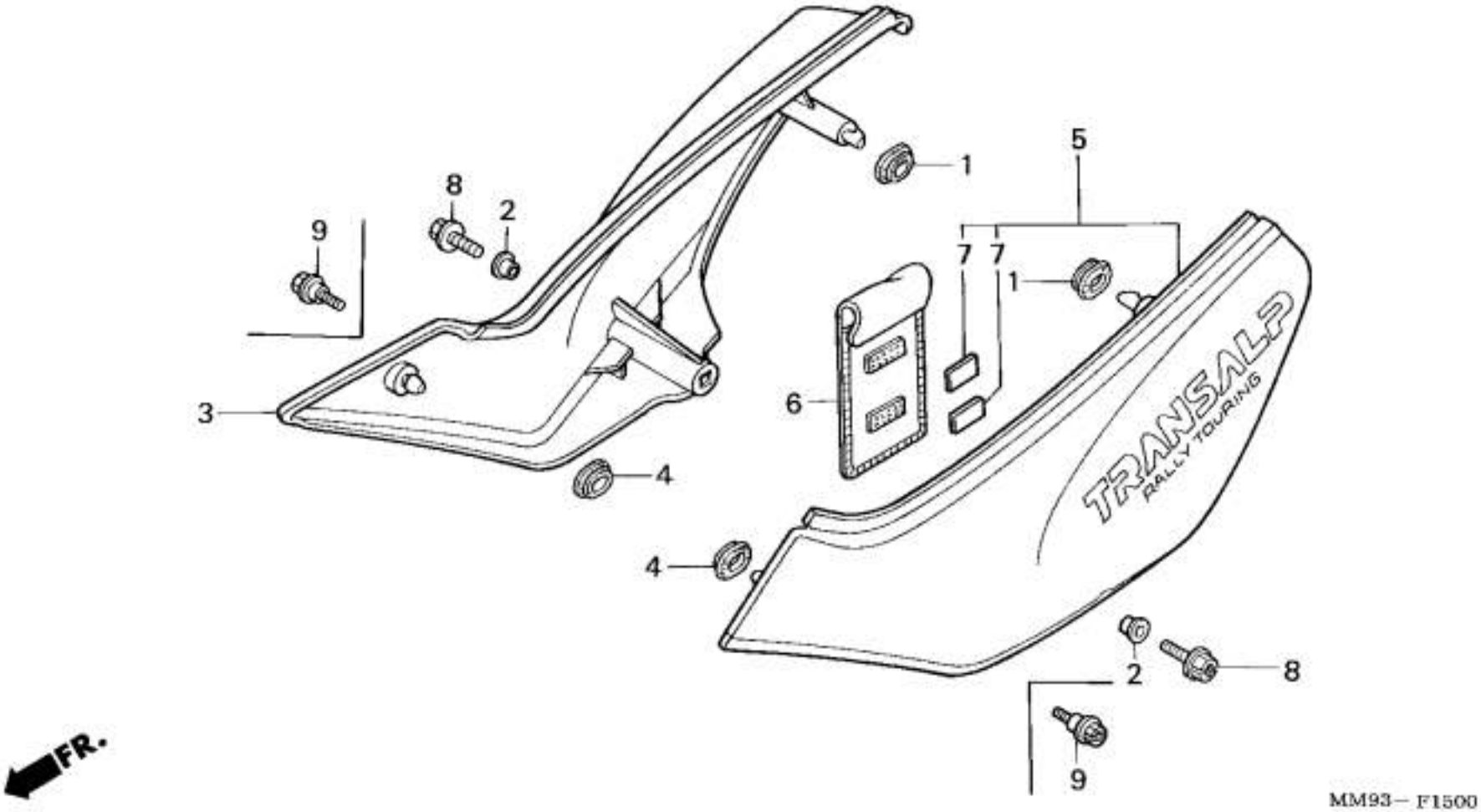

1
5
8
2
9
7
7
1
6
3
4
4
TRANSALP
RALLY TOURING
2
8
9
FR.
MM93– F1500

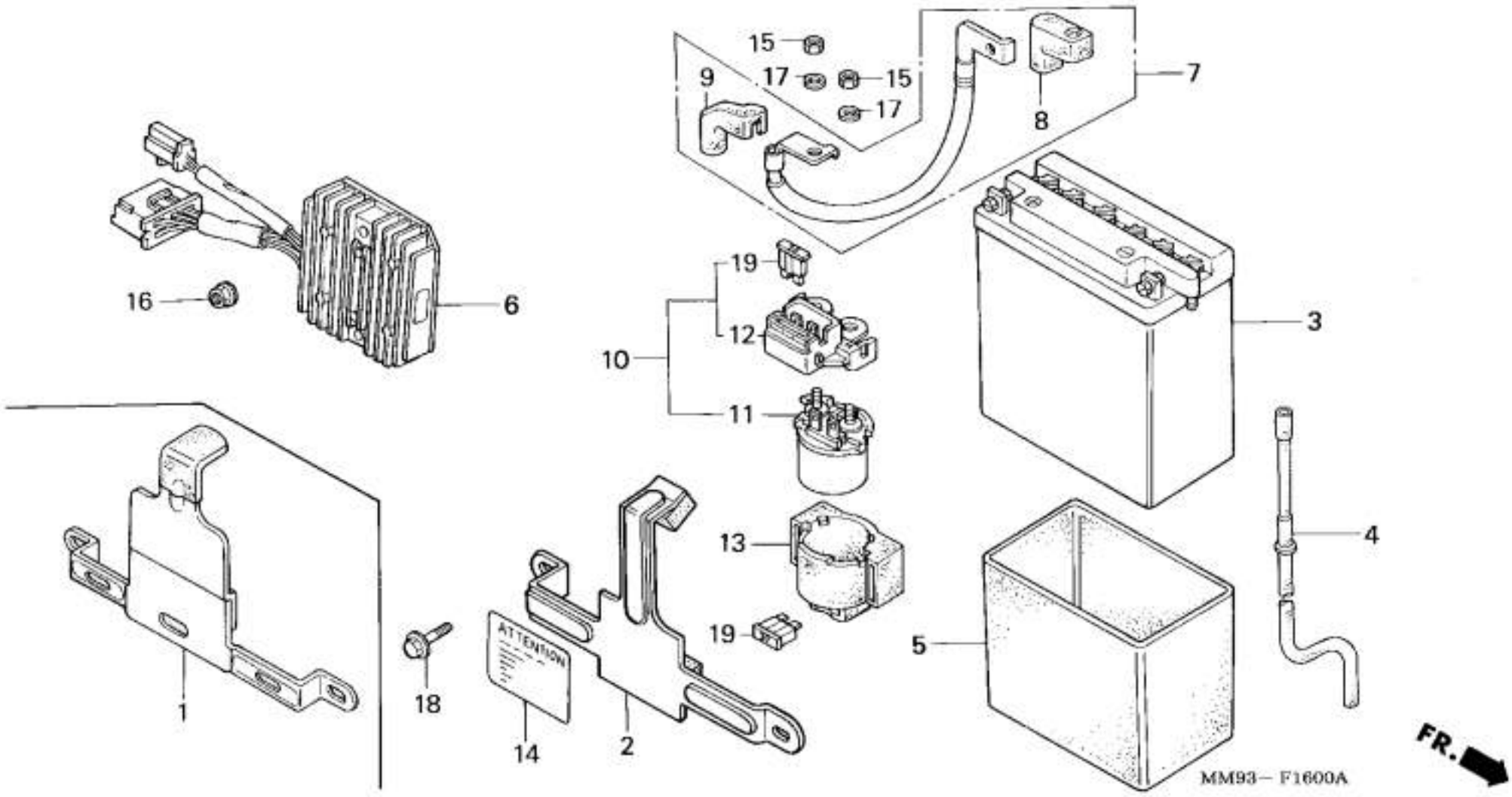
15
17
15
17
9
8
7
19
12
10
11
13
19
16
6
3
4
5
1
18
14
2
ATTENTION
MM93– F1600A
FR.

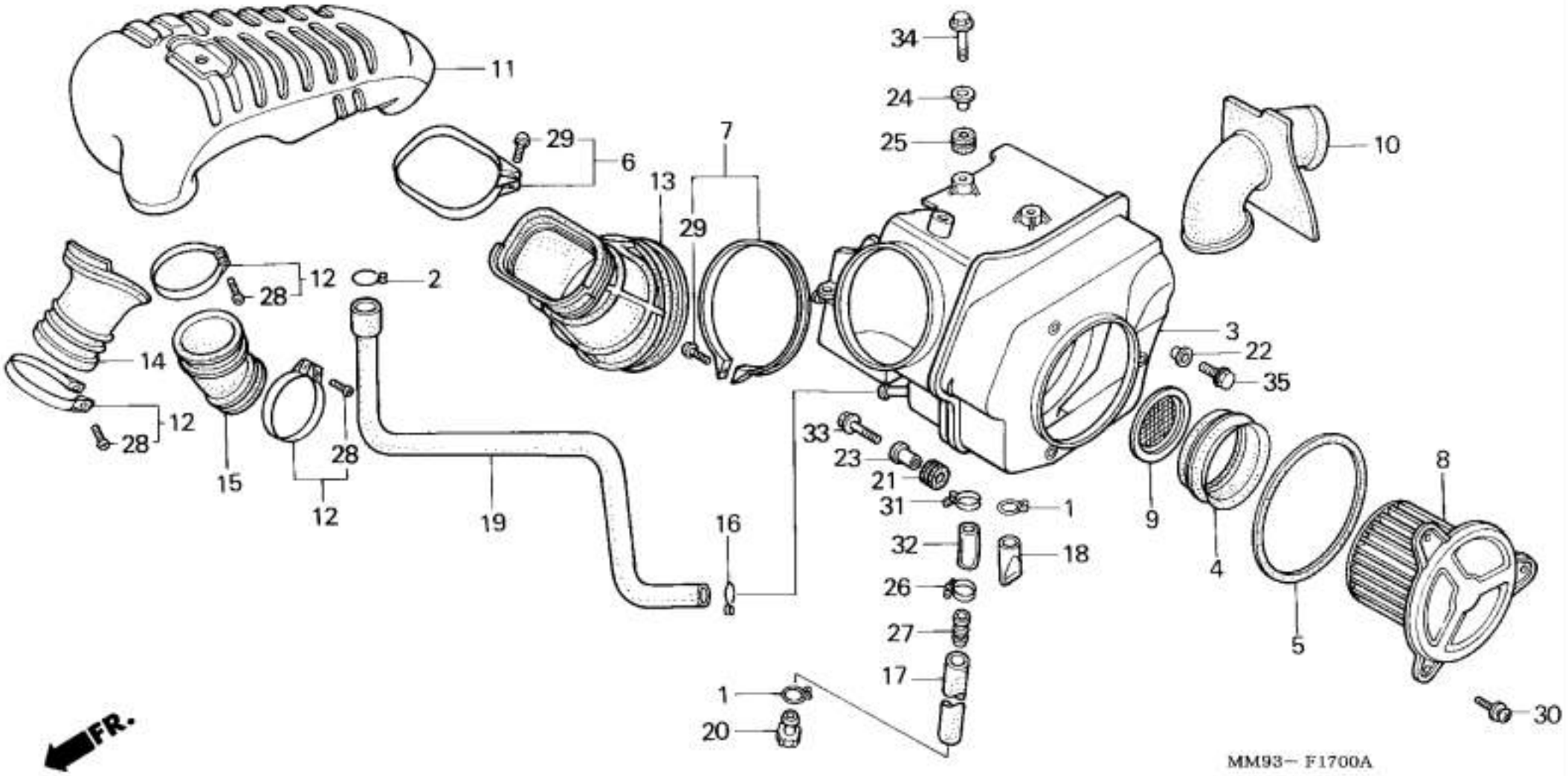

11
34
24
25
10
29
6
7
13
29
12
2
28
14
3
22
35
12
28
15
28
12
19
33
23
21
31
1
9
8
16
32
18
4
26
5
27
17
1
20
30
FR.
MM93— F1700A

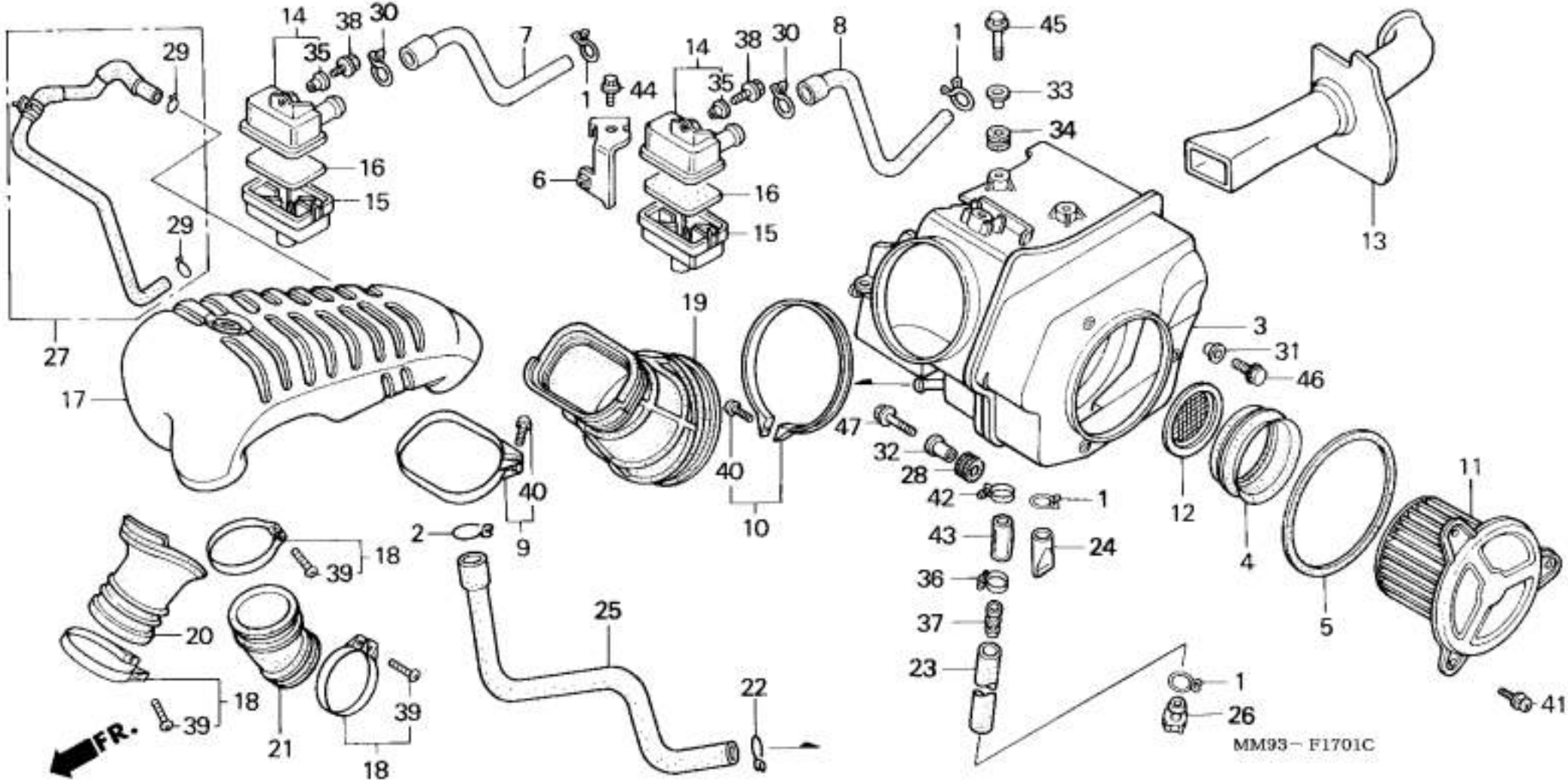

14
38
30
35
7
29
1
44
14
38
30
8
1
45
35
33
34
16
6
16
15
15
13
29
27
19
3
31
46
17
47
32
28
40
40
42
1
12
11
2
9
10
43
24
4
18
39
36
5
20
25
37
23
1
22
26
41
18
39
39
21
18
FR.
MM93- F1701C

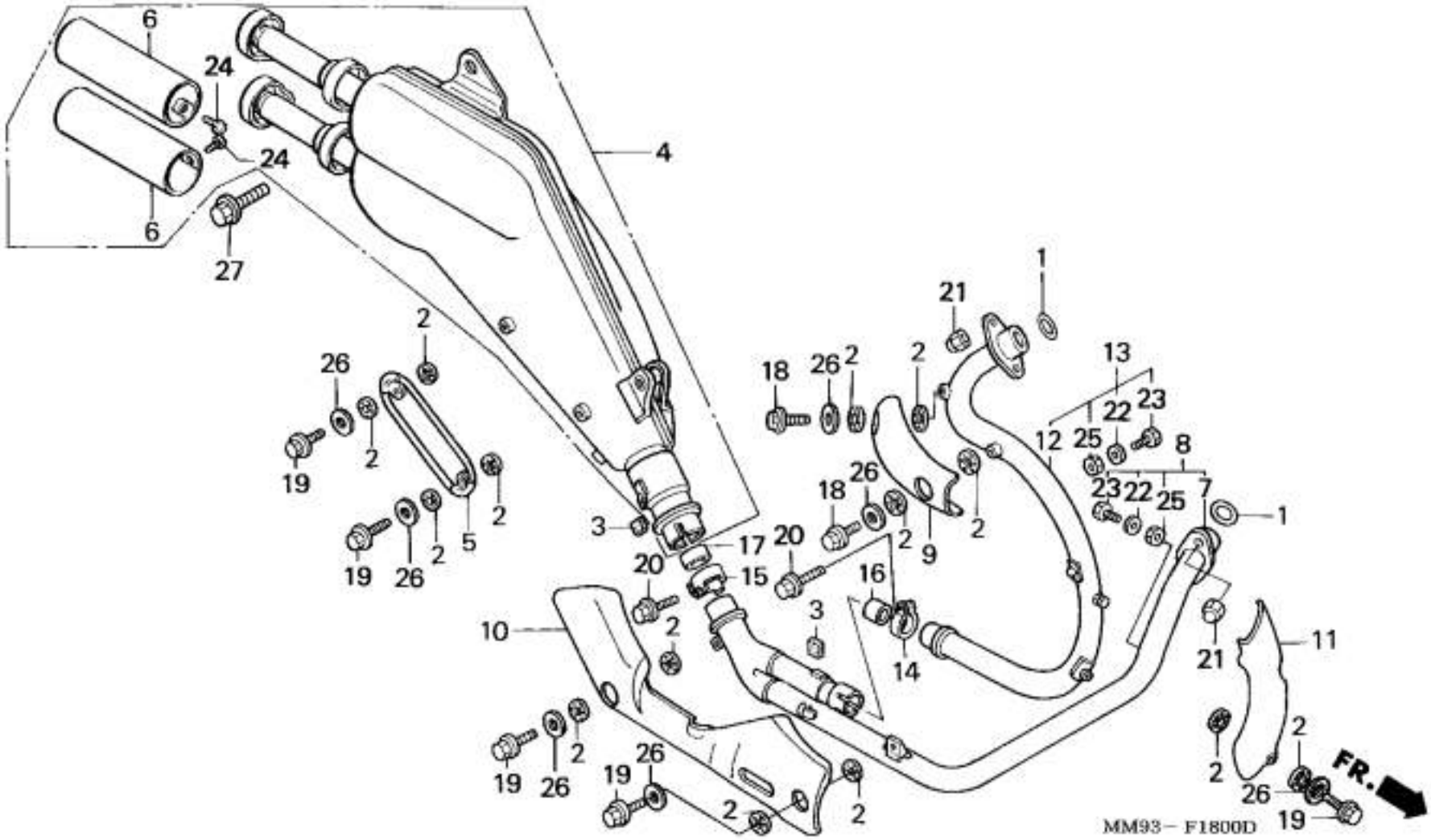
6
24
24
6
27
4
2
26
19
2
5
2
19
26
2
2
3
17
20
15
20
2
10
19
26
2
19
26
2
2
18
26
2
2
1
21
13
12
25
22
23
8
23
22
25
7
1
18
26
2
9
2
20
16
3
14
21
11
2
2
26
19
FR.
MM93 – F1800D

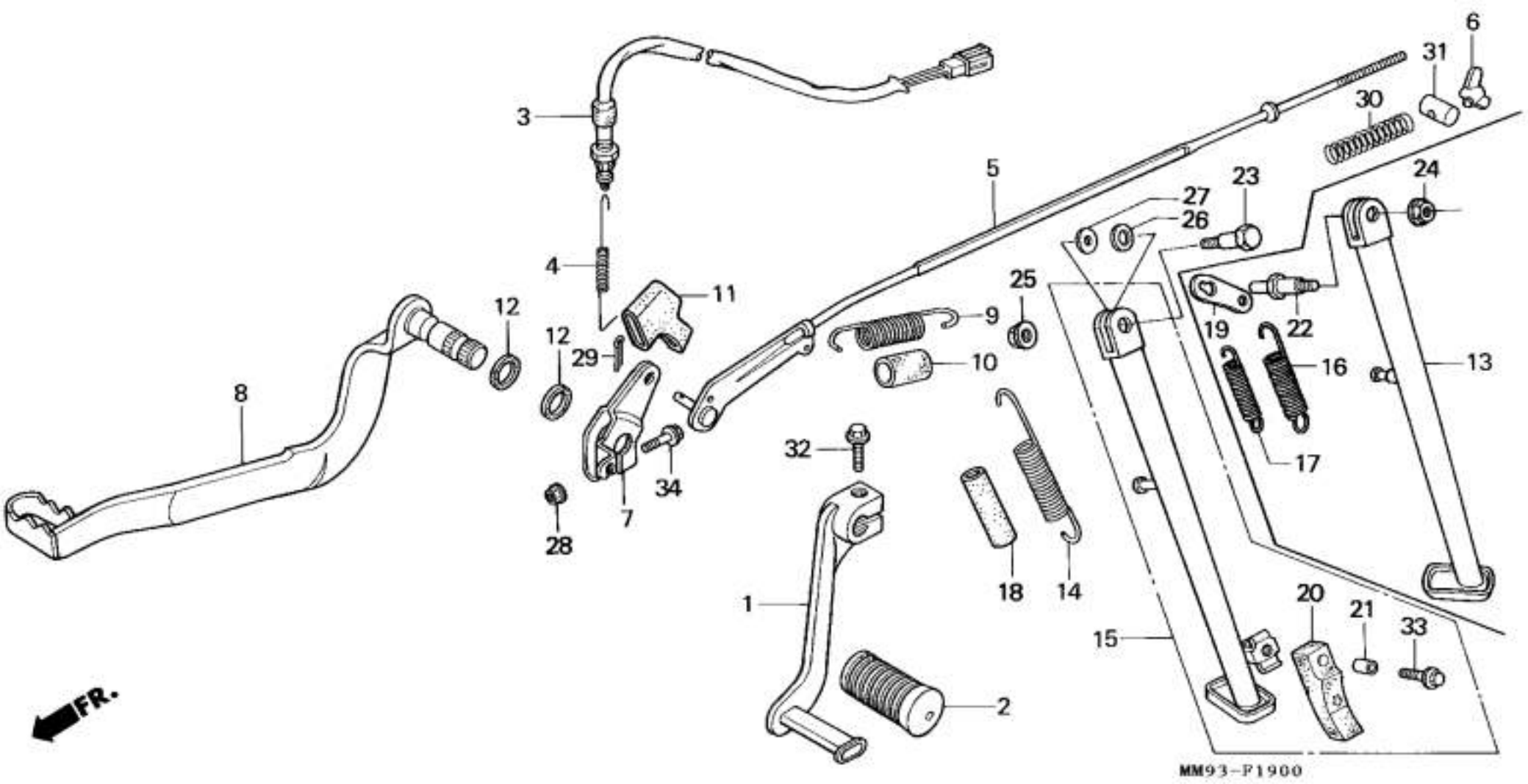
1
2
3
4
5
6
7
8
9
10
11
12
12
13
14
15
16
17
18
19
20
21
22
23
24
25
26
27
28
29
30
31
32
33
34
FR.
MM93-P1900

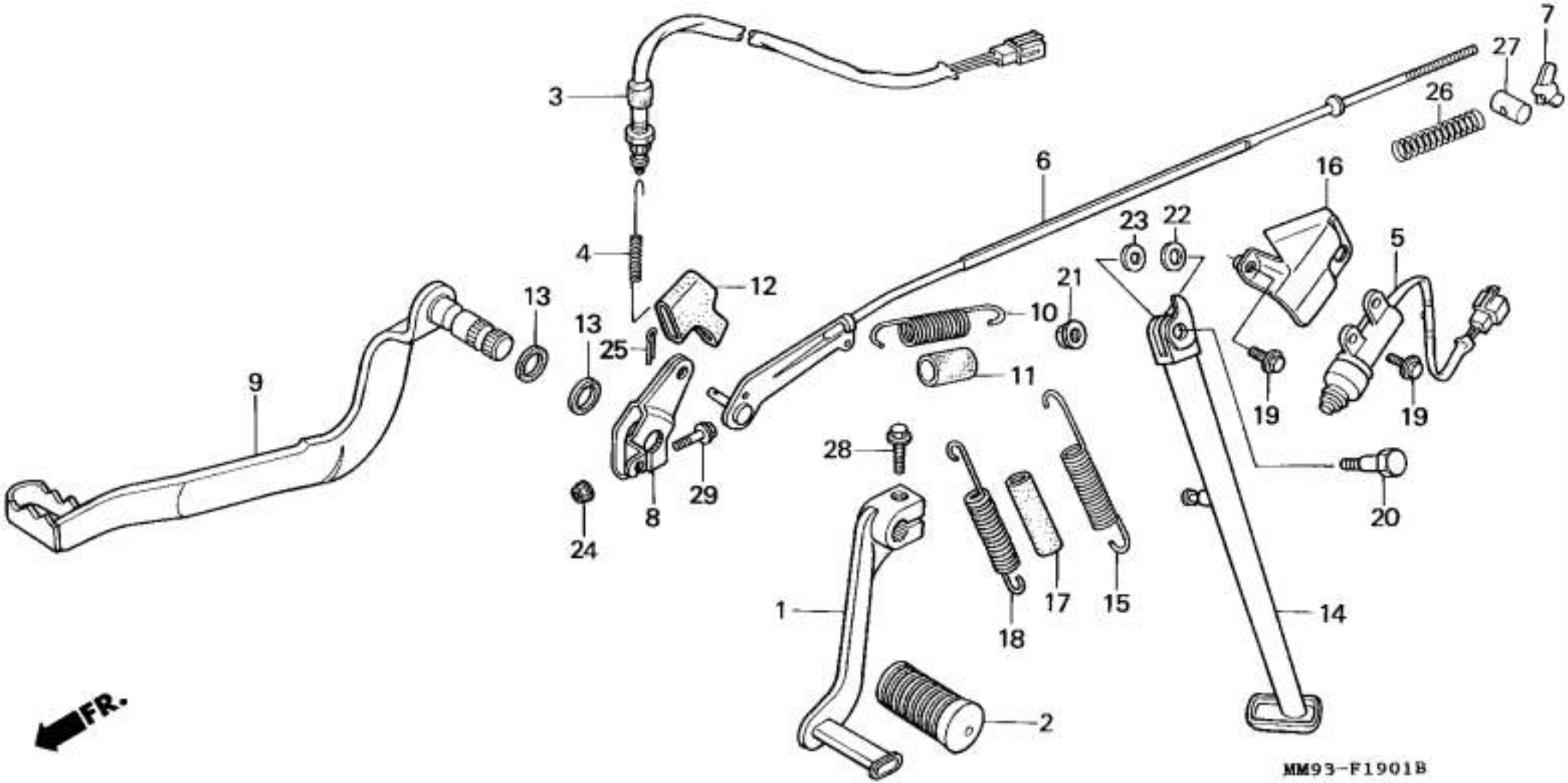
1
2
3
4
5
6
7
8
9
10
11
12
13
13
14
15
16
17
18
19
19
20
21
22
23
24
25
26
27
28
29
FR.
MM93-F1901B

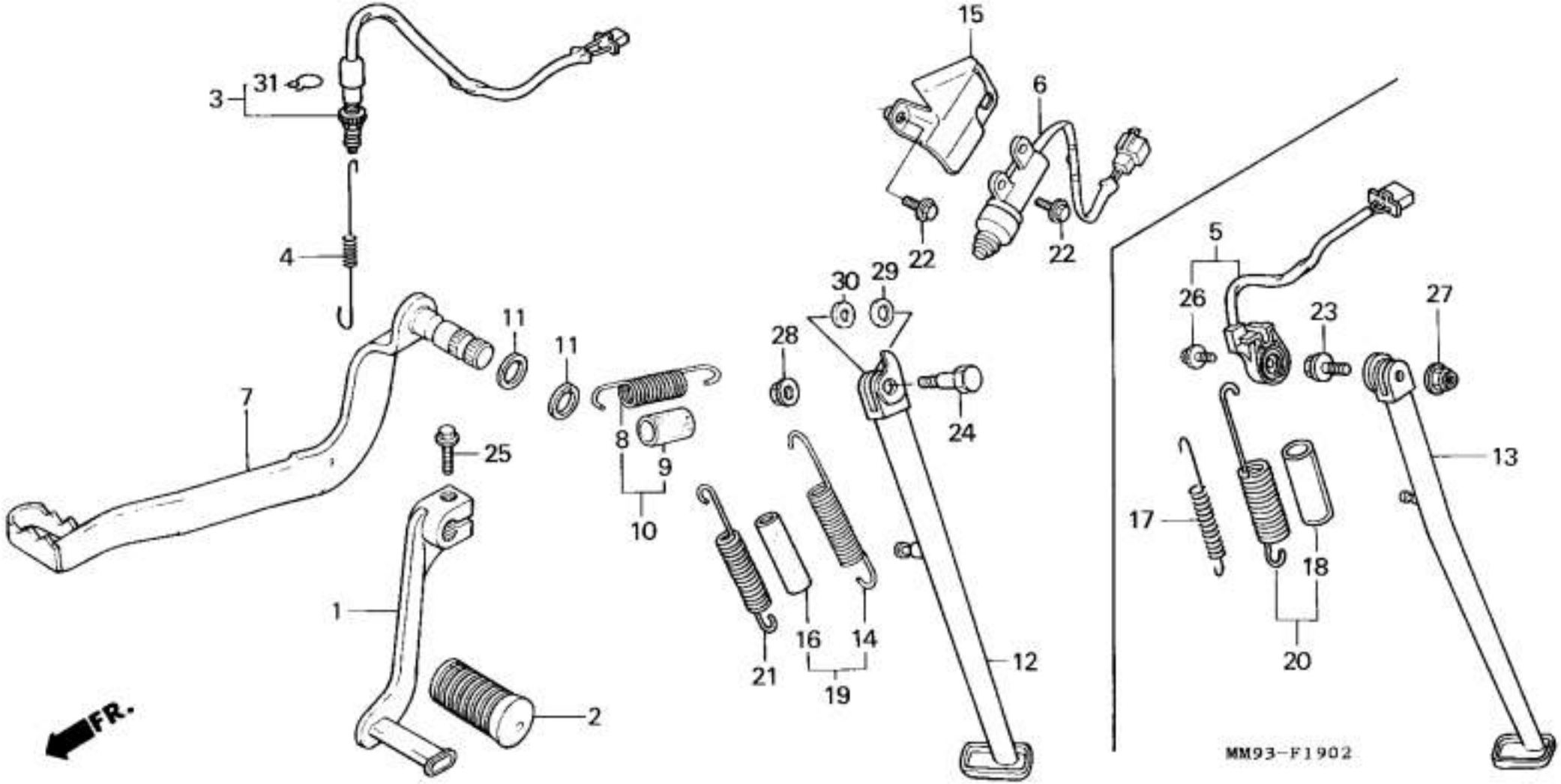
3
31
4
7
11
11
25
8
9
10
1
2
FR.
15
6
22
22
30
29
28
24
21
16
14
19
12
5
26
23
27
17
18
20
13
MM93-F1902

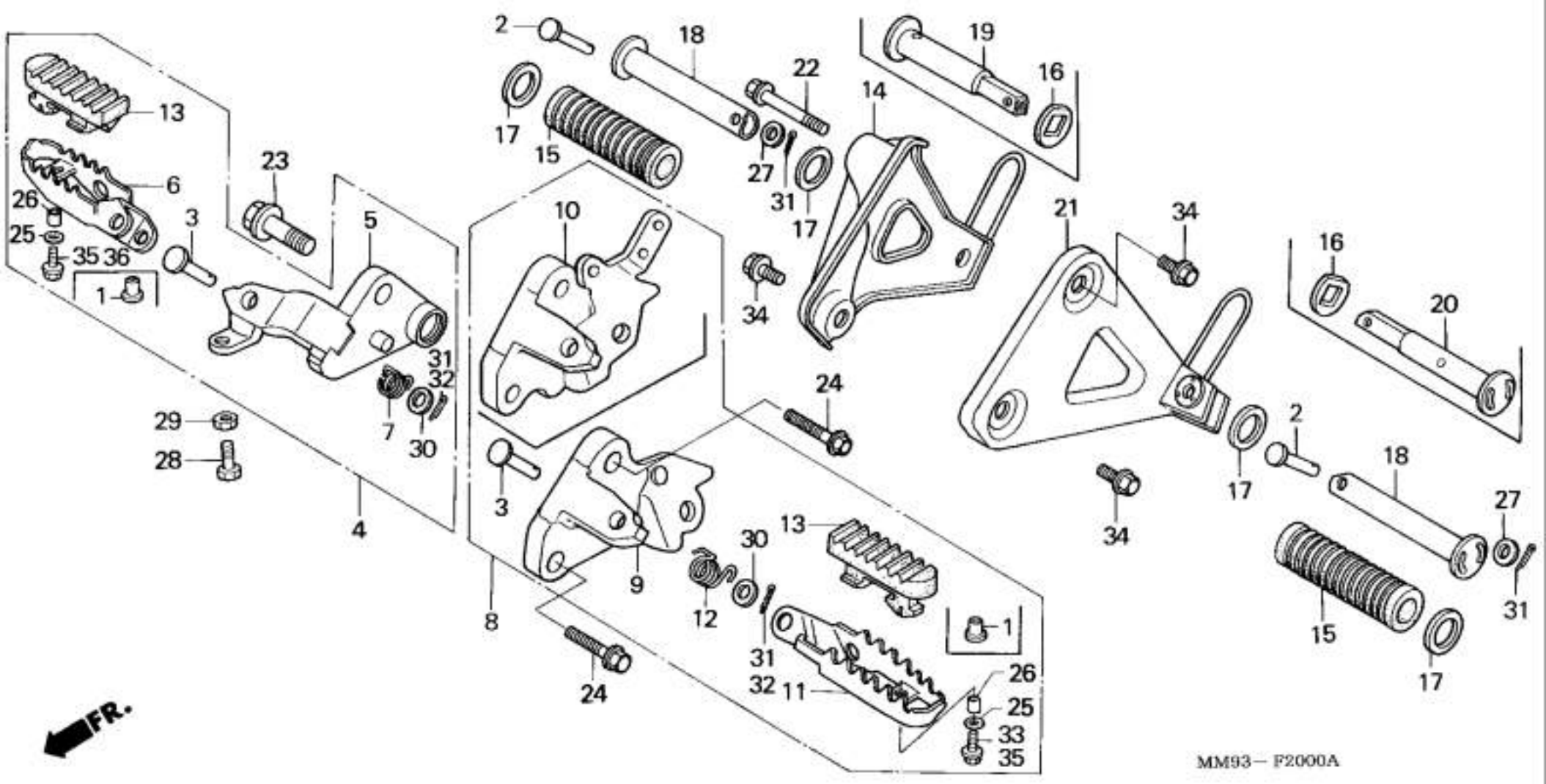
FR.
MM93 – F2000A

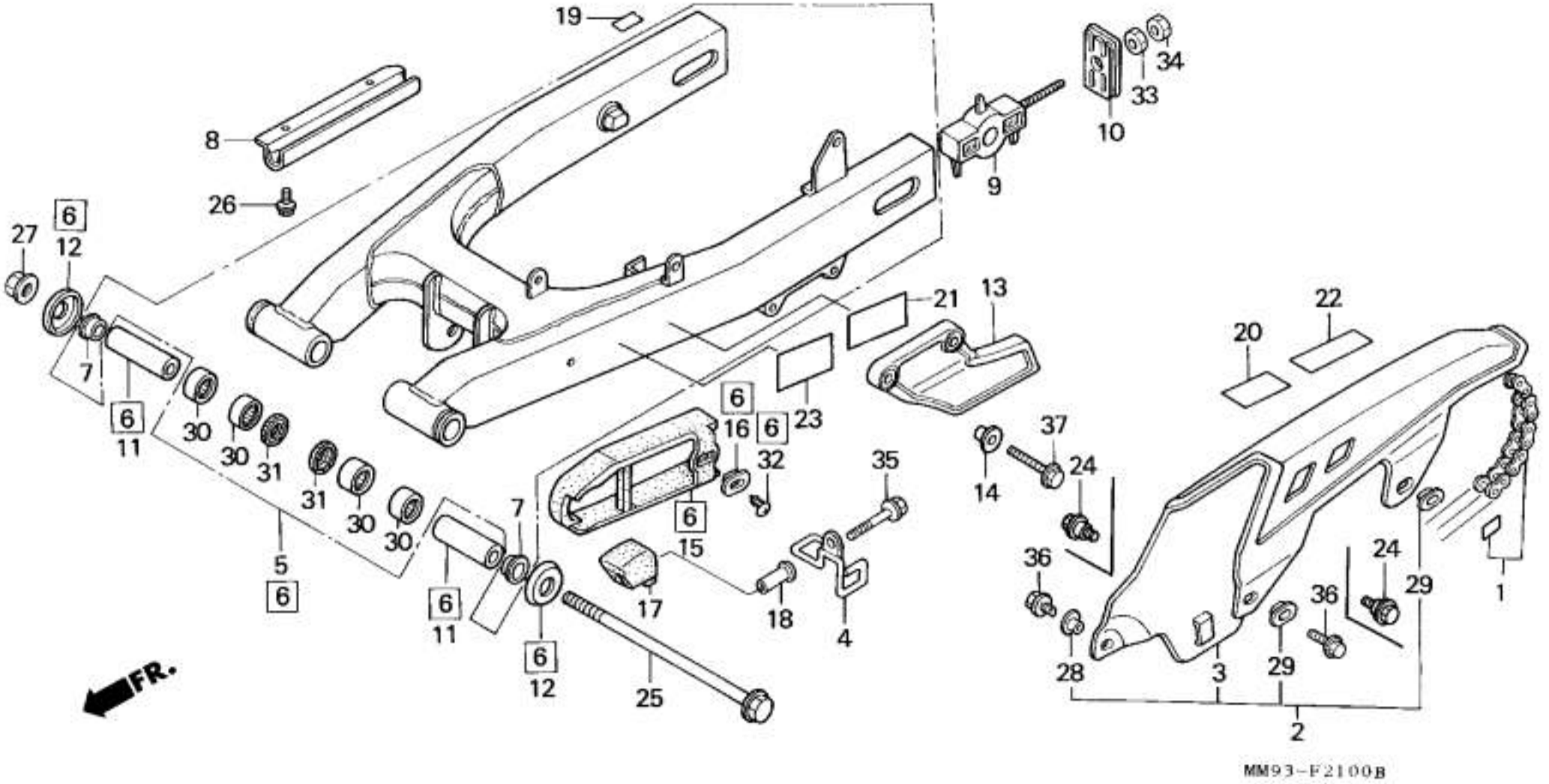
19
8
26
9
10
33
34
27
6
12
7
6
11
30
30
31
31
30
30
5
6
6
16
6
32
23
21
13
6
15
7
6
11
6
12
17
18
4
35
25
14
37
24
20
22
36
24
29
1
36
28
3
29
2
FR.
MM93-F2100B

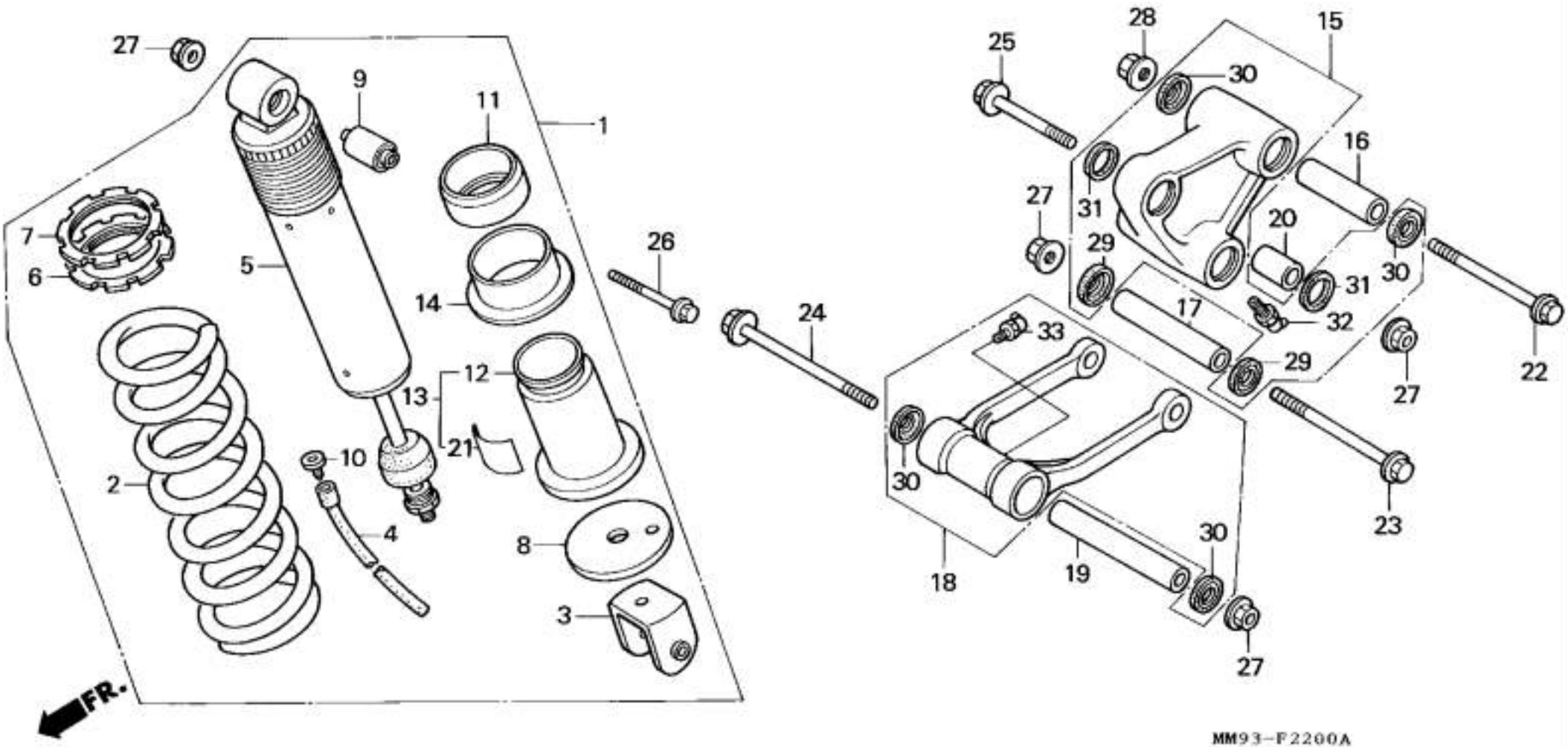

27
9
11
1
7
6
5
14
26
24
12
13
21
10
2
4
8
3
FR.
25
28
15
30
16
31
27
20
29
30
31
17
32
33
29
22
27
30
23
18
19
30
27
MM93-F2200A

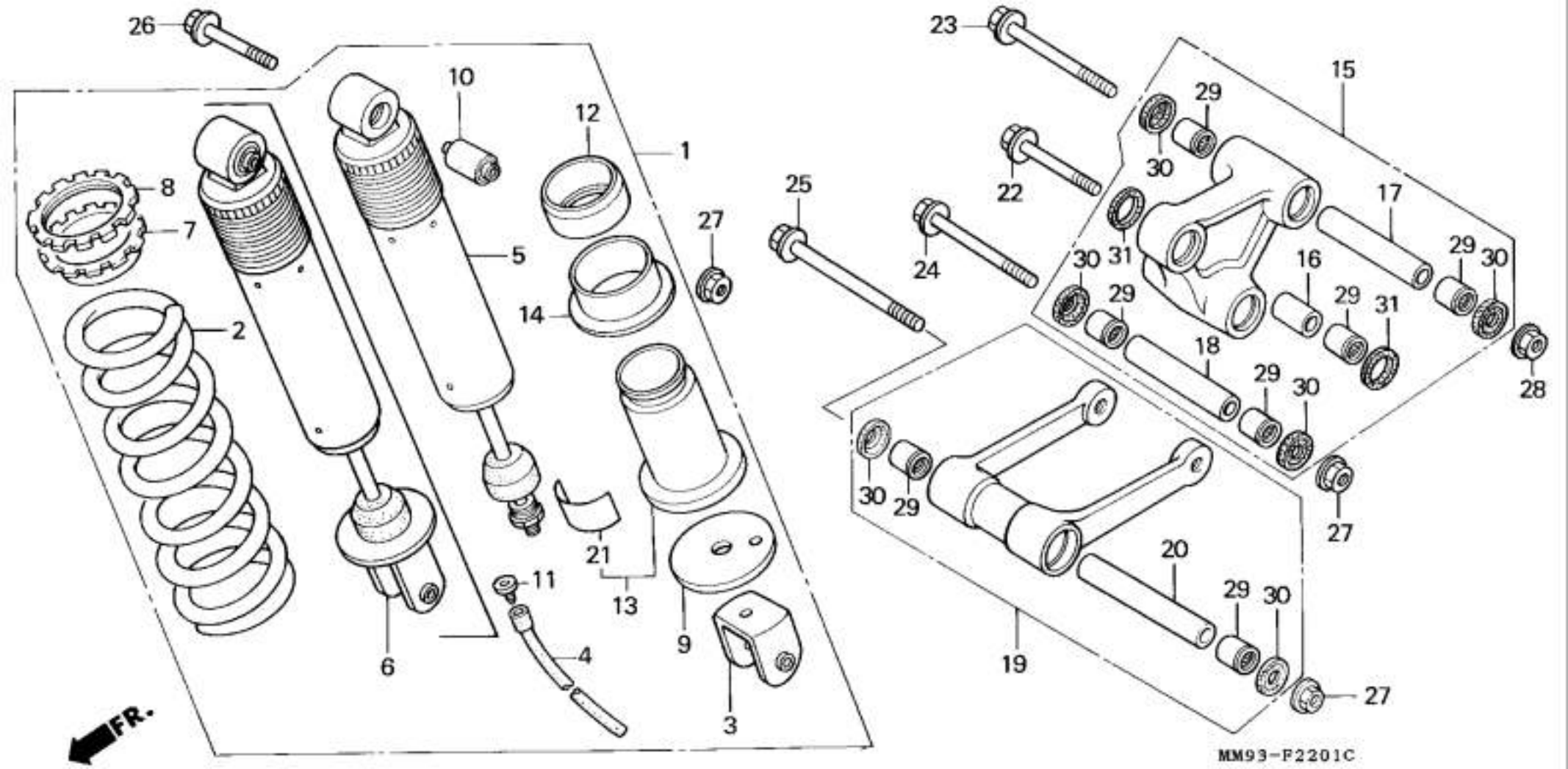
26
10
12
1
8
7
5
27
2
14
25
24
23
22
15
29
30
31
17
16
18
28
6
21
13
11
4
9
3
20
19
27
FR.
MM93-P2201C

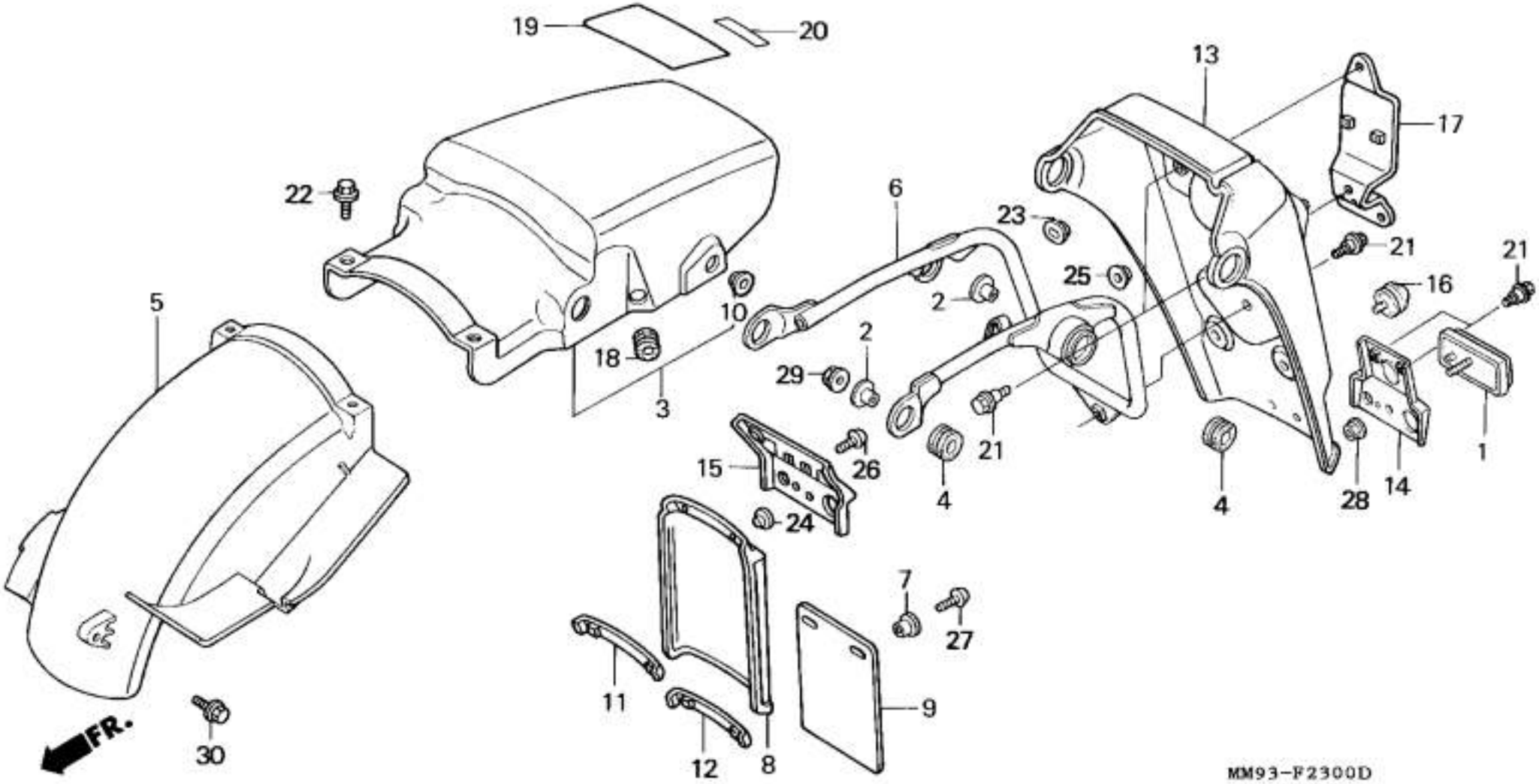
19
20
13
17
22
6
23
21
21
25
16
5
10
2
2
18
29
3
21
1
15
26
4
4
28
14
24
7
27
11
9
12
8
FR.
30
MM93-F2300D

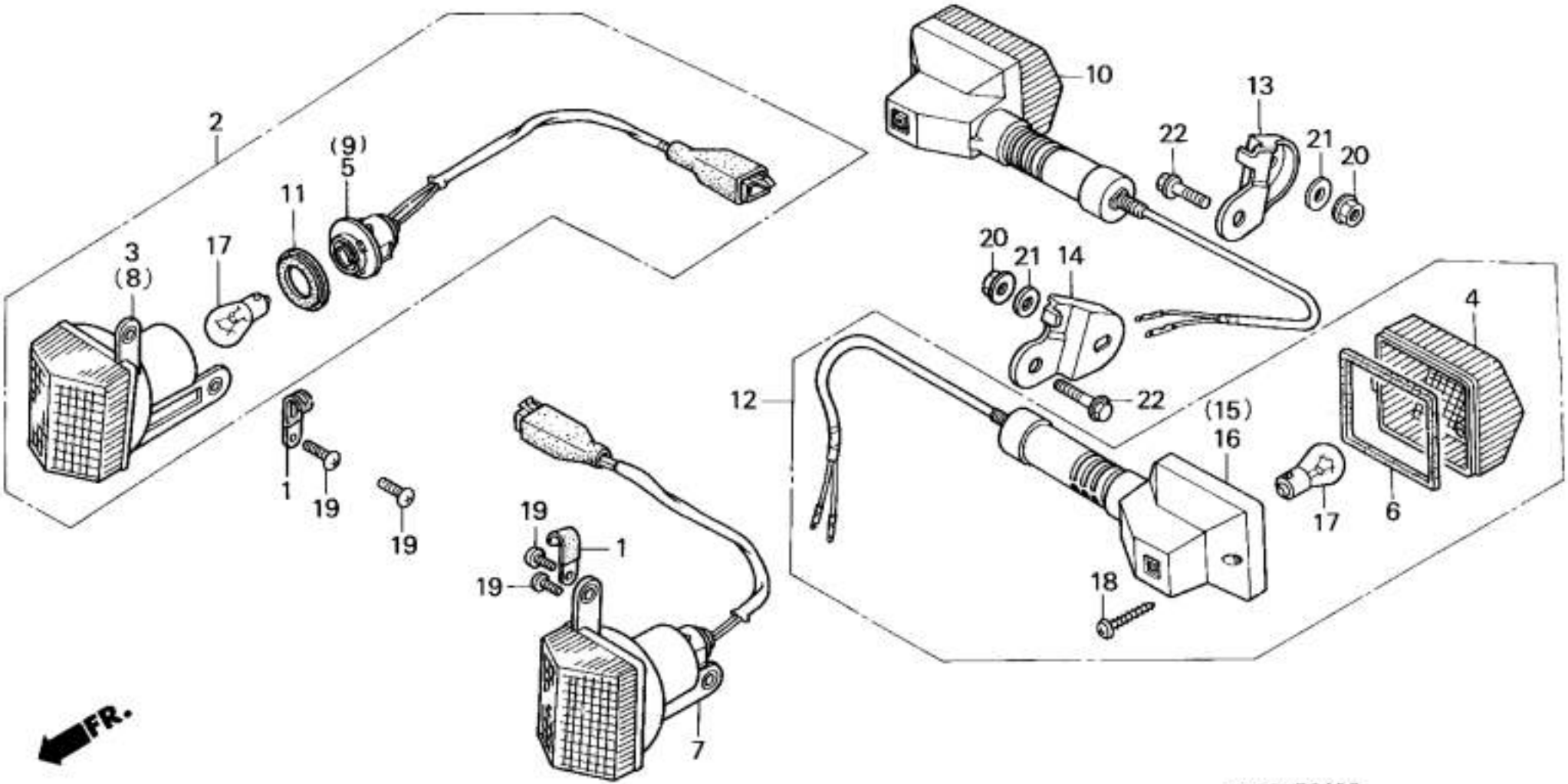
2
(9)
5
11
3
(8)
17
1
19
19
19
19
1
7
10
22
13
21
20
20
21
14
22
12
(15)
16
18
4
6
17
FR.
MM93-P2400

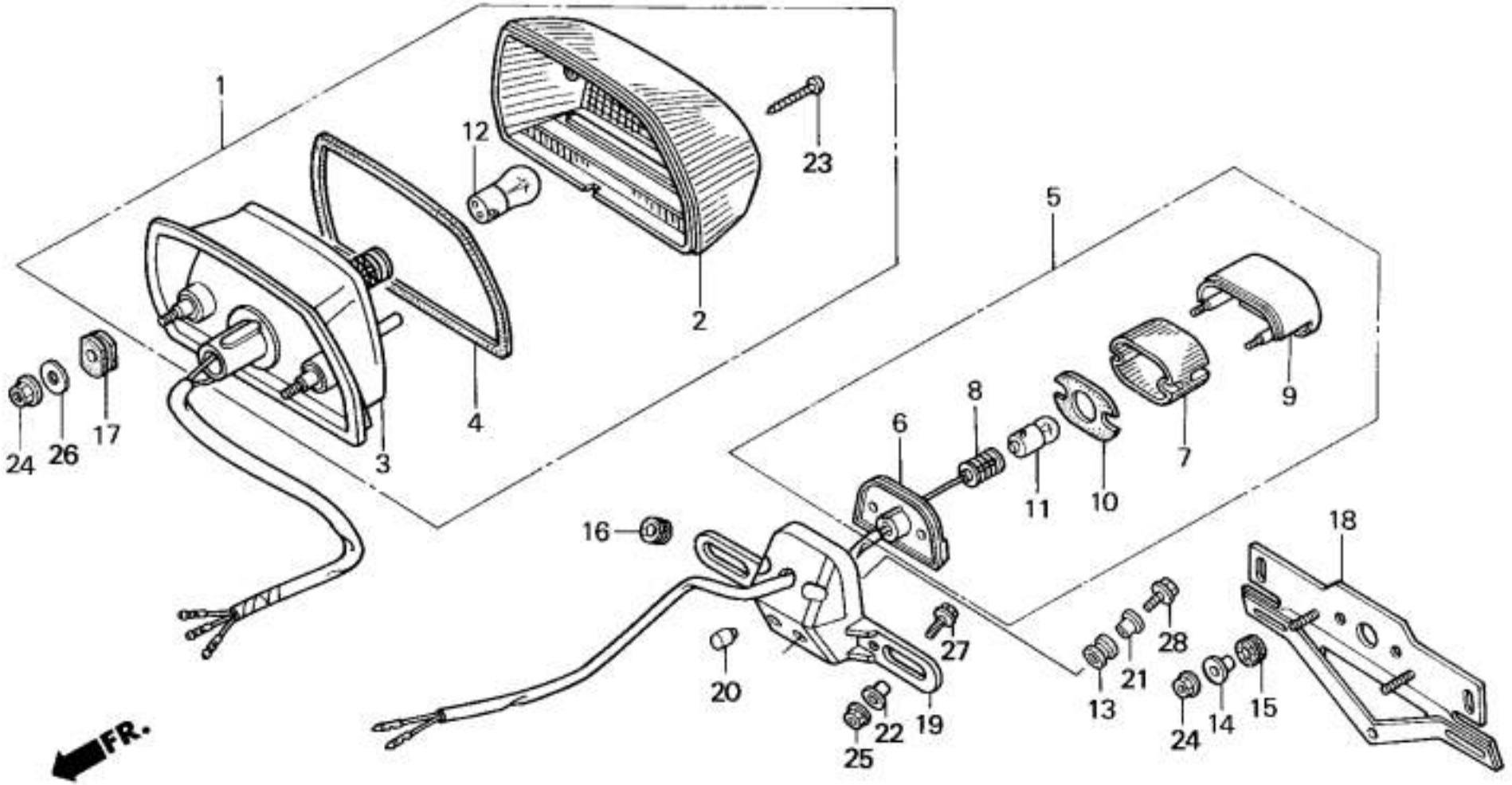
1
2
3
4
5
6
7
8
9
10
11
12
13
14
15
16
17
18
19
20
21
22
23
24
25
26
27
28
FR.
MM93-P2500

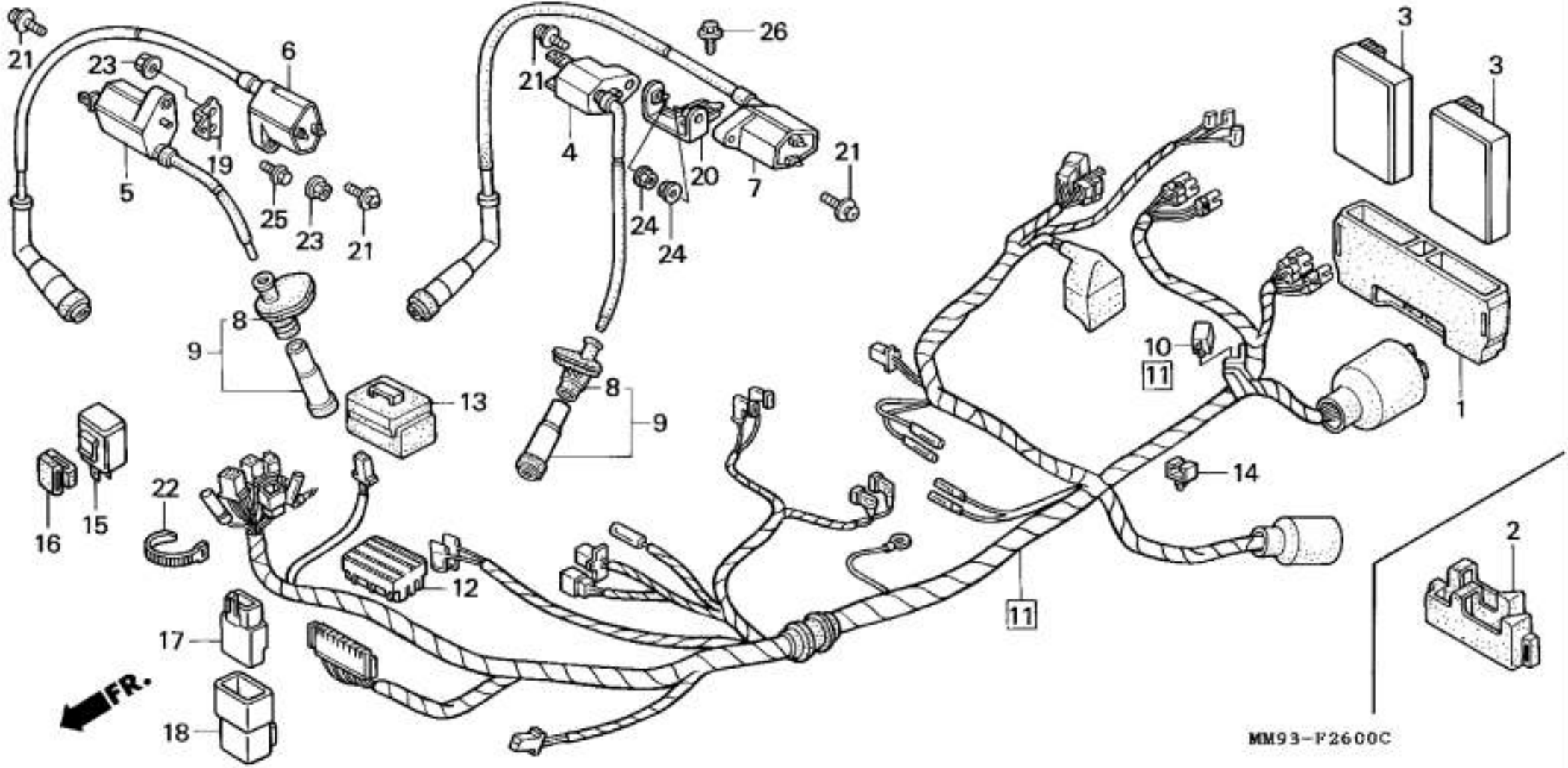
21
23
6
19
5
25
23
21
26
21
4
20
7
21
24
24
3
3
8
9
13
8
9
10
11
1
14
16
15
22
12
11
2
17
18
FR.
MM93-F2600C

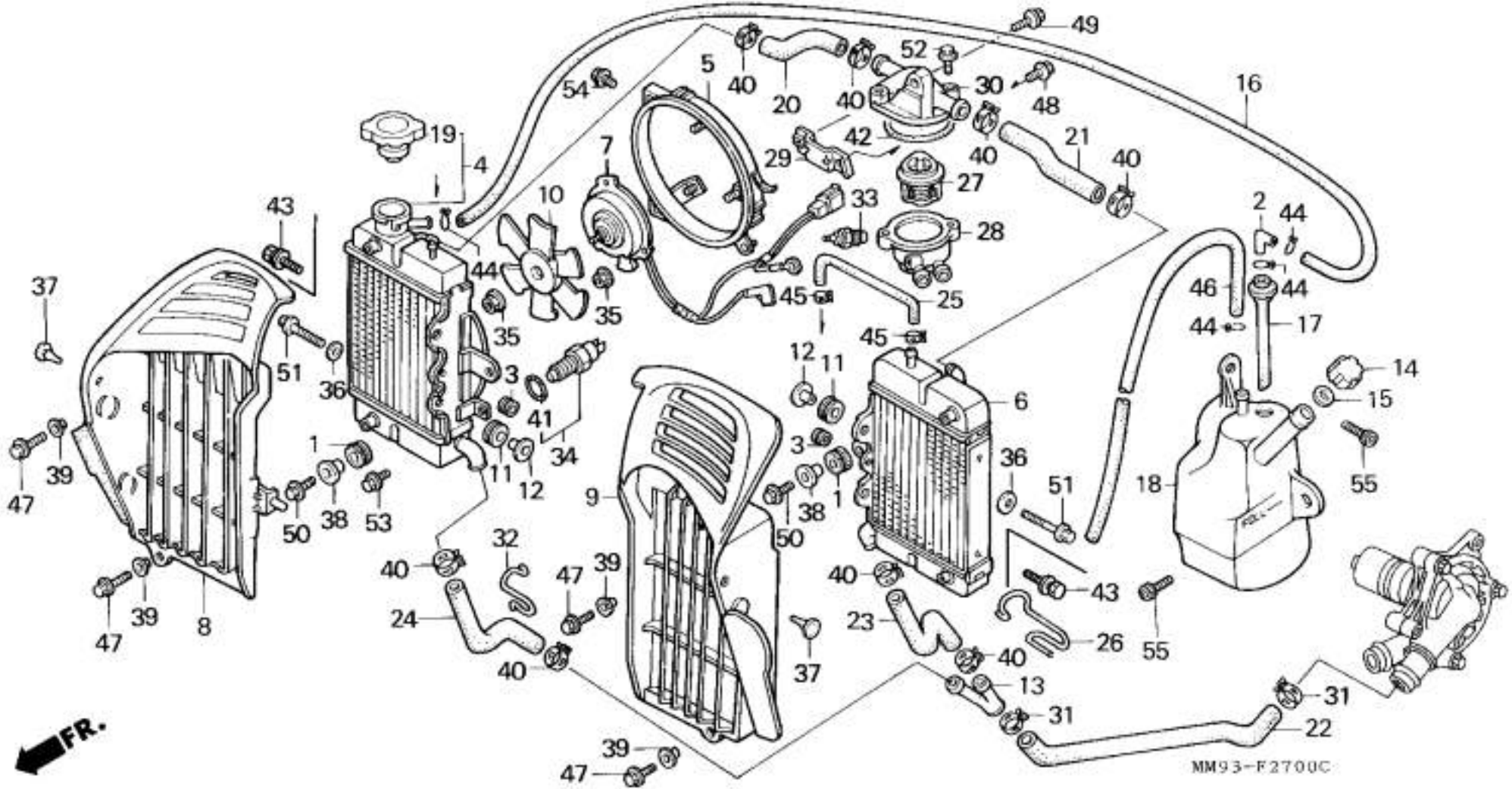
FR.
MM93-F2700C

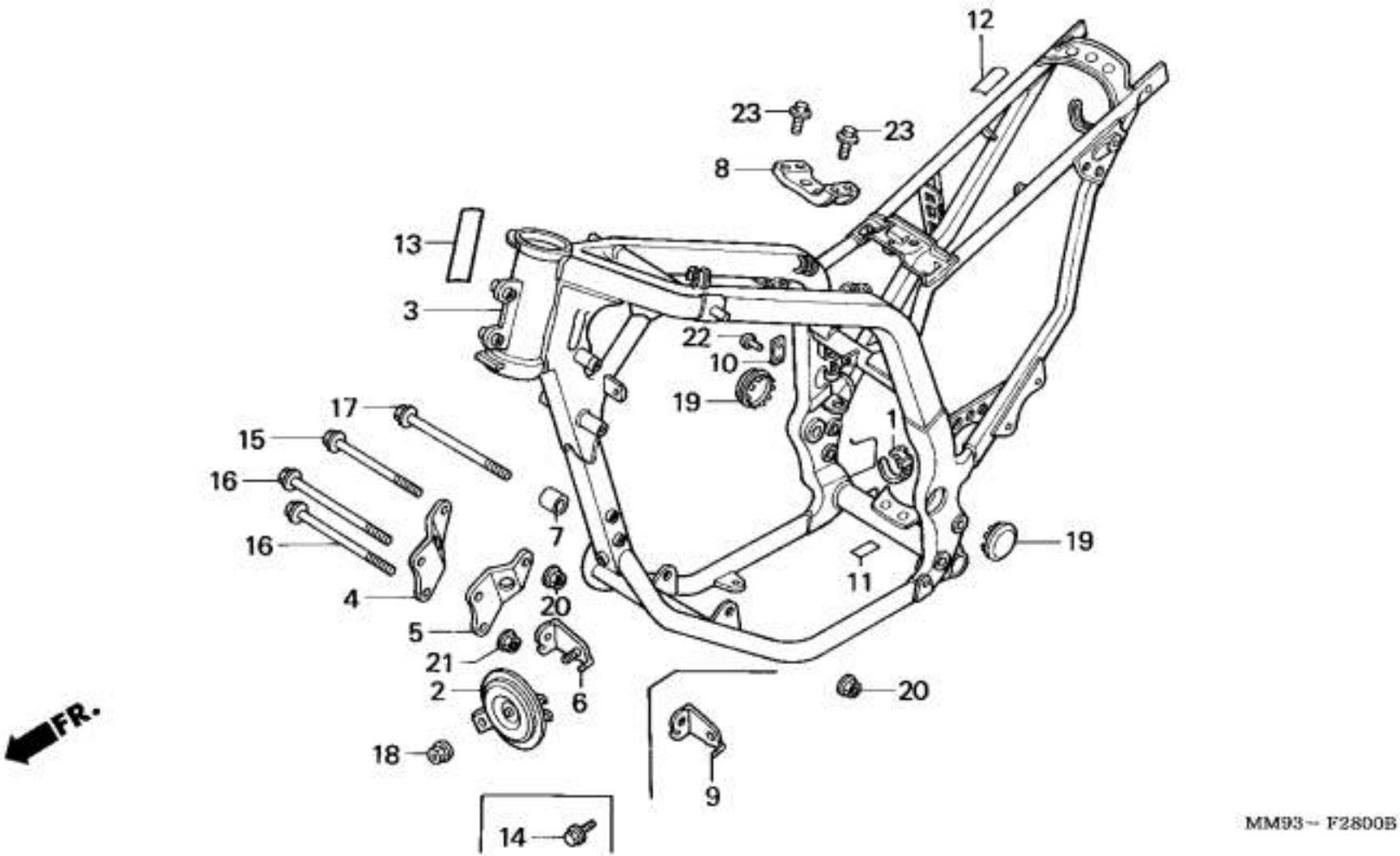

MM93~ F2800B

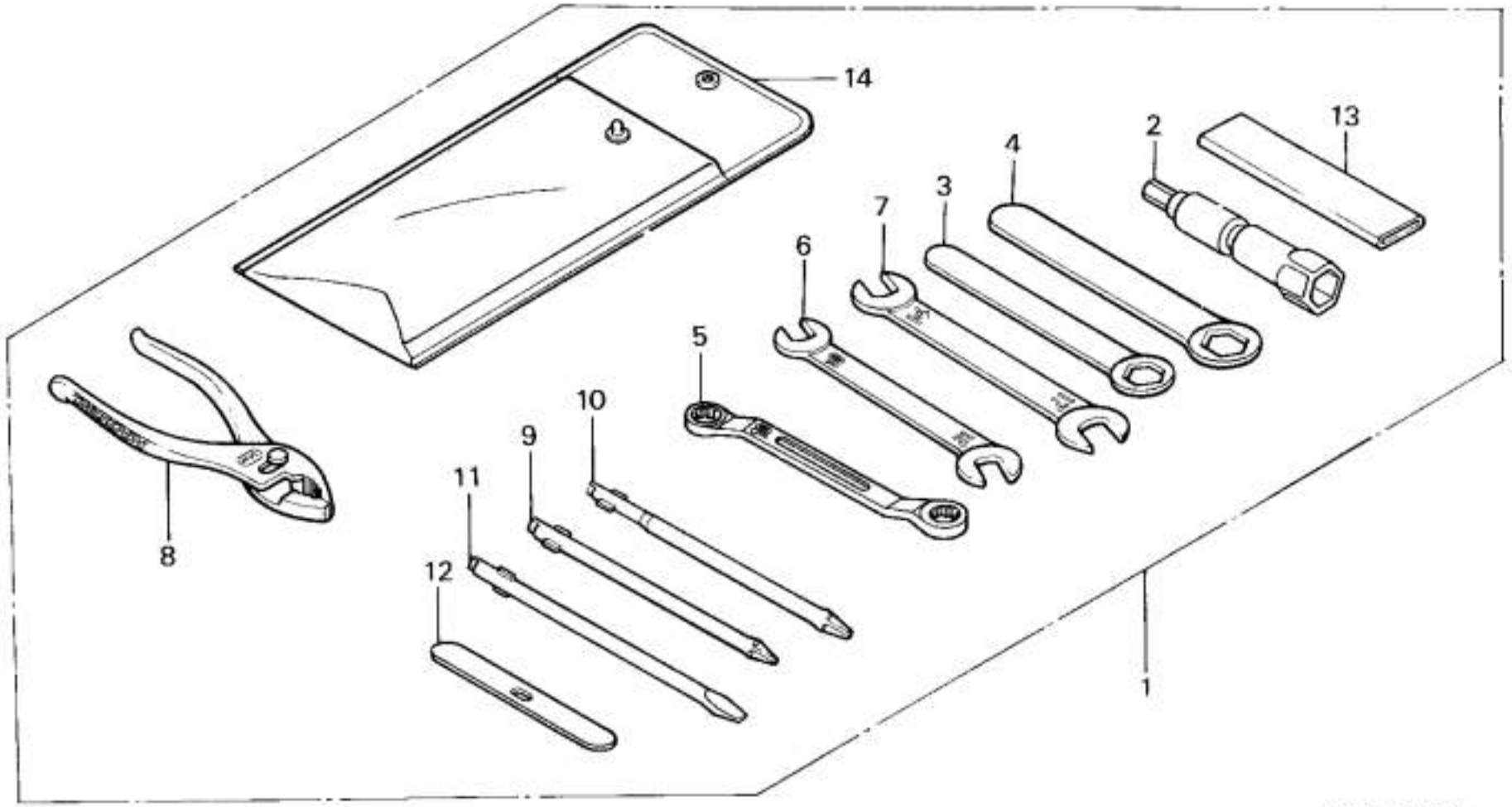
14
13
2
4
3
7
6
5
10
9
11
12
8
1
MM93-F2900

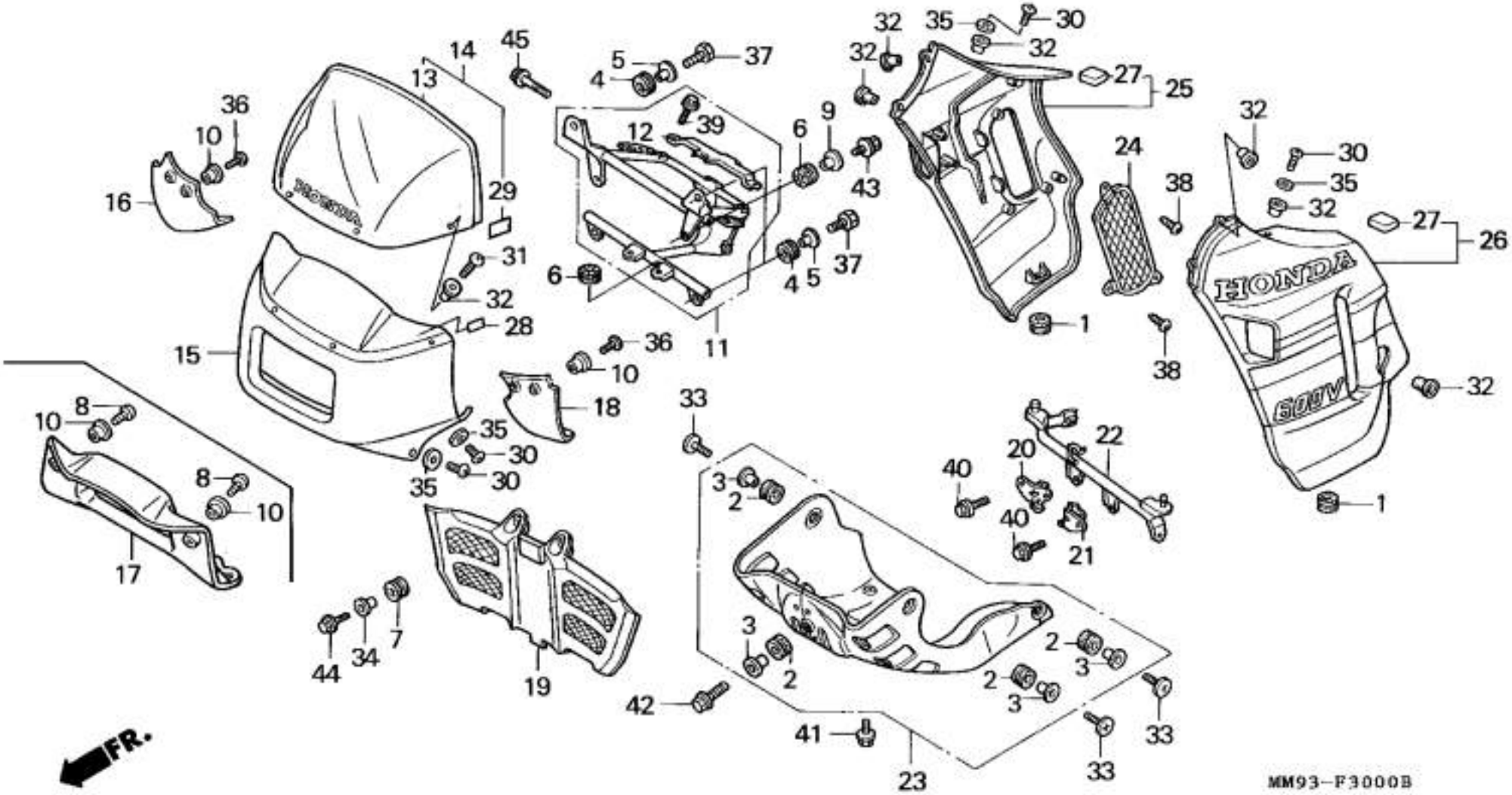
HONDA
600V
FR.
MM93-F3000B

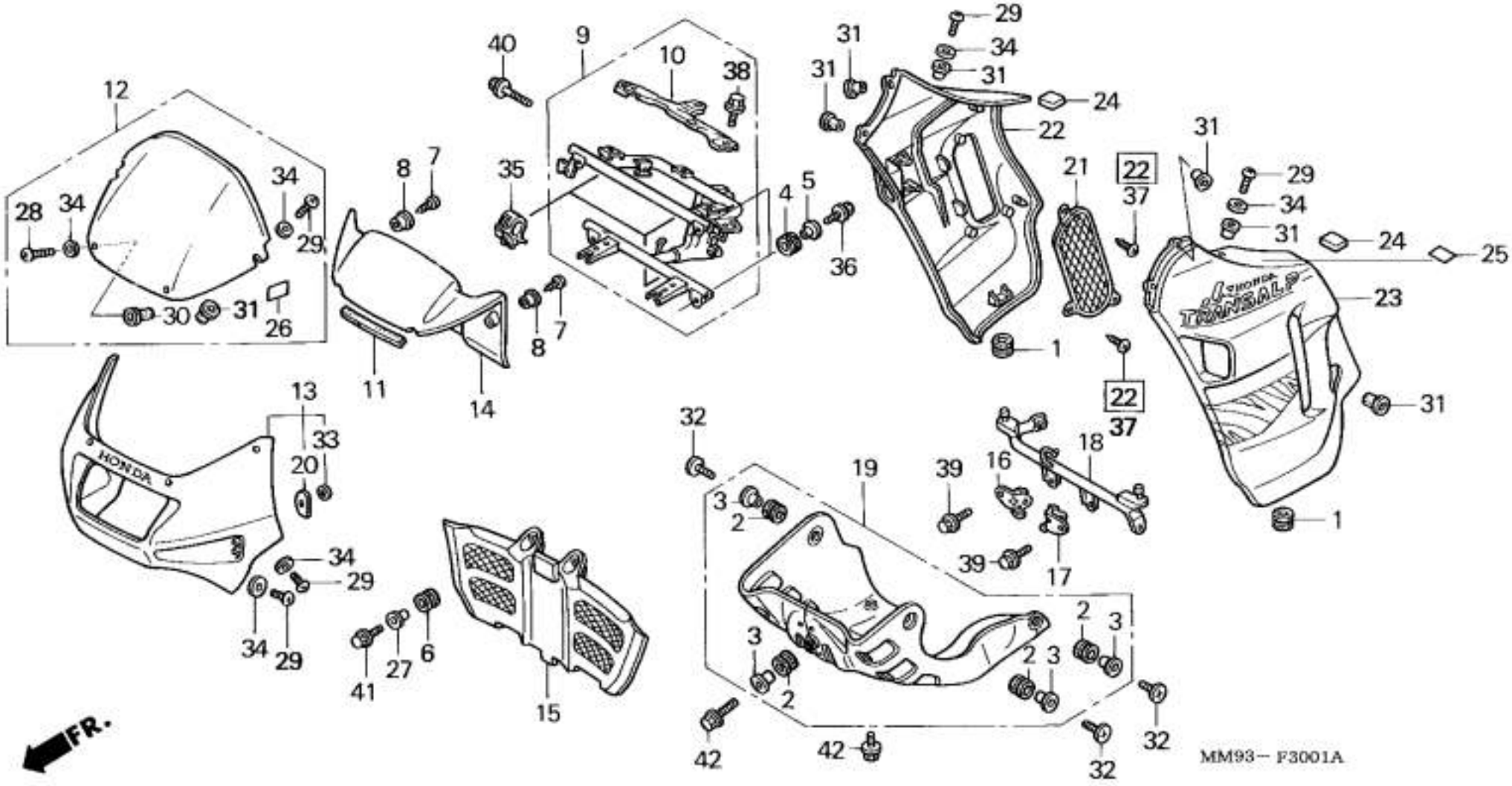
HONDA
TRANSALP
FR.
MM93– F3001A

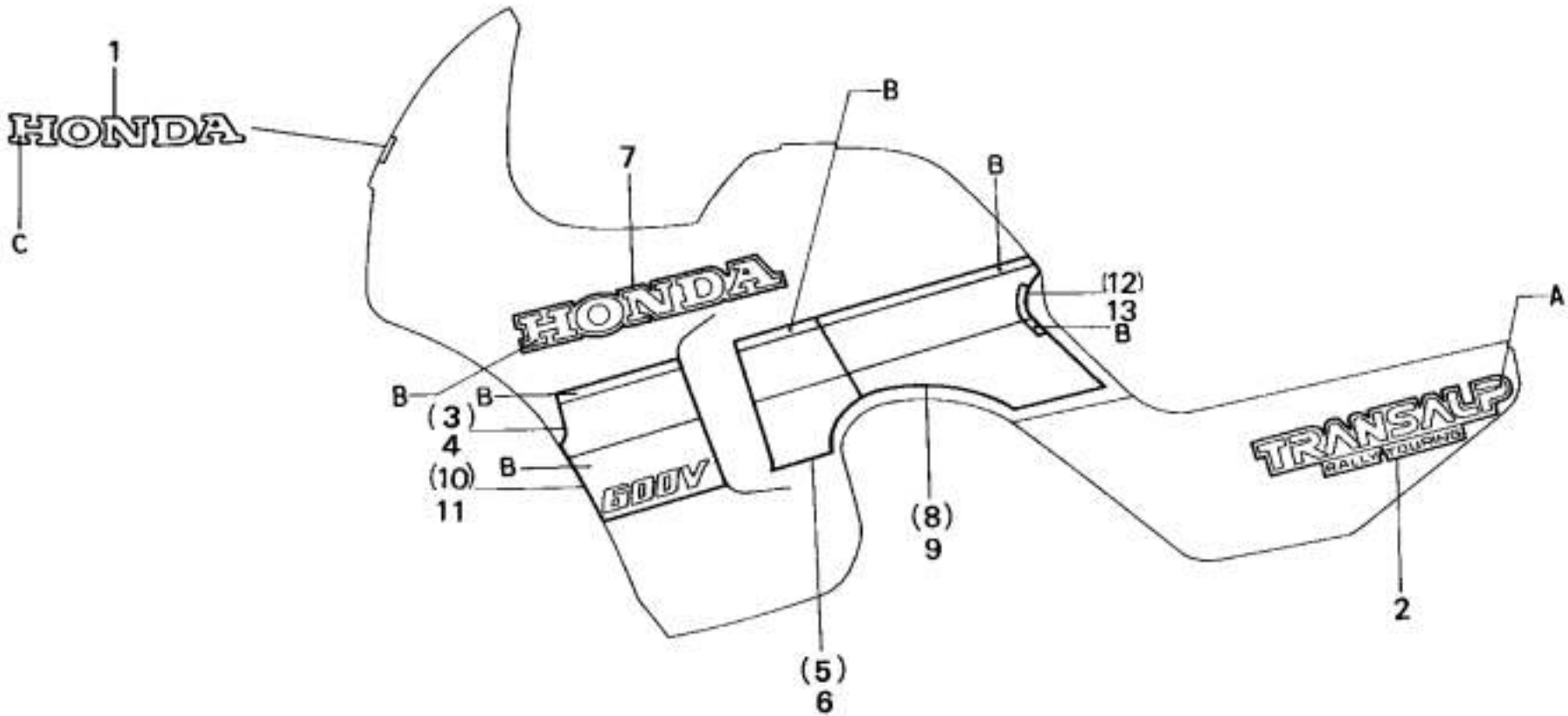
1
HONDA
C
7
B
B
(12)
13
B
A
HONDA
B
B
(3)
4
B
(10)
11
600V
(8)
9
TRANSALP
RALLY TOURING
2
(5)
6

MM93-F3100A

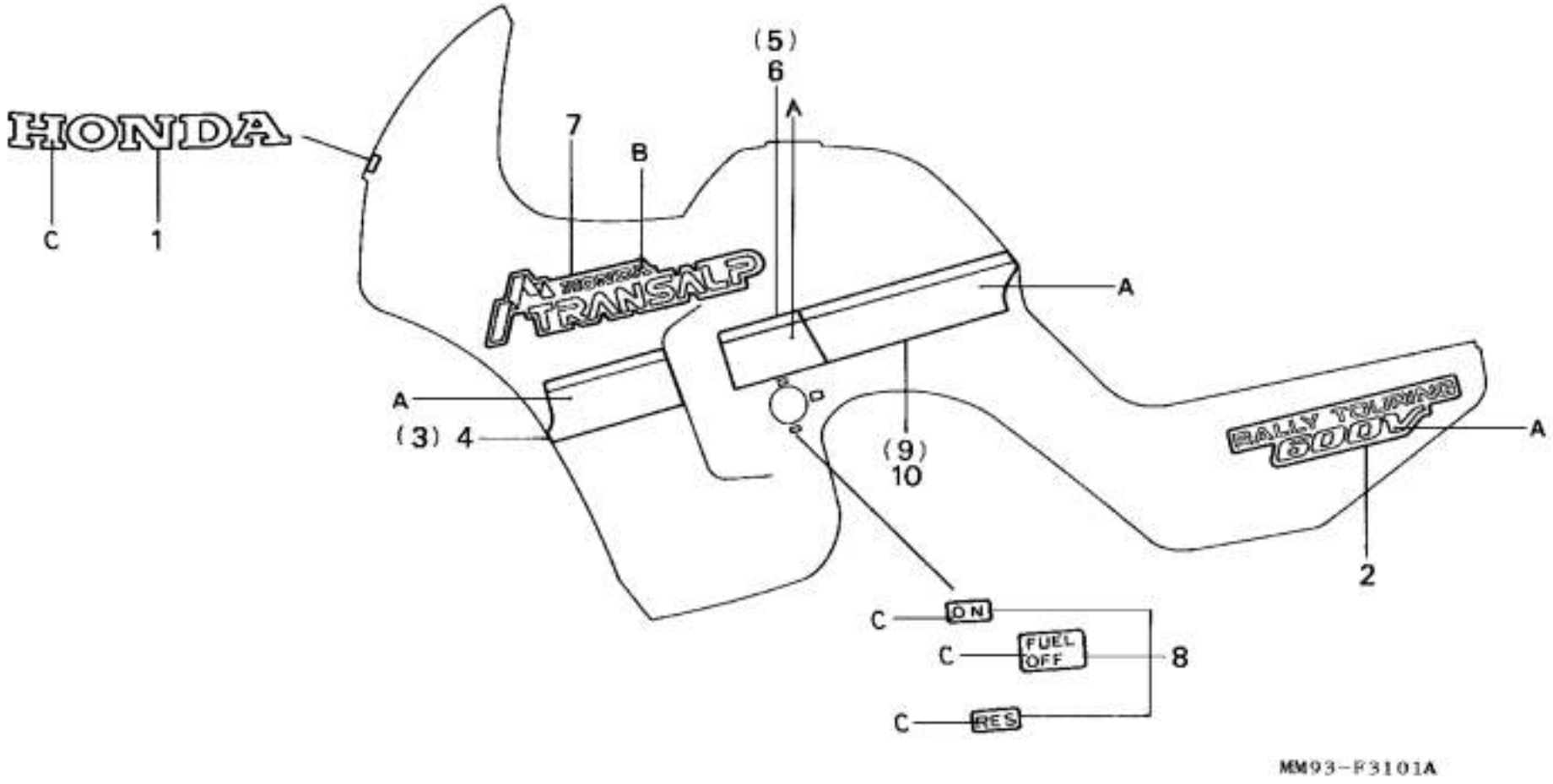
HONDA
C
1
7
B
(5)
6
A
A
(3) 4
(9)
10
A
2
C
ON
C
FUEL
OFF
8
C
RES
MM93-P3101A

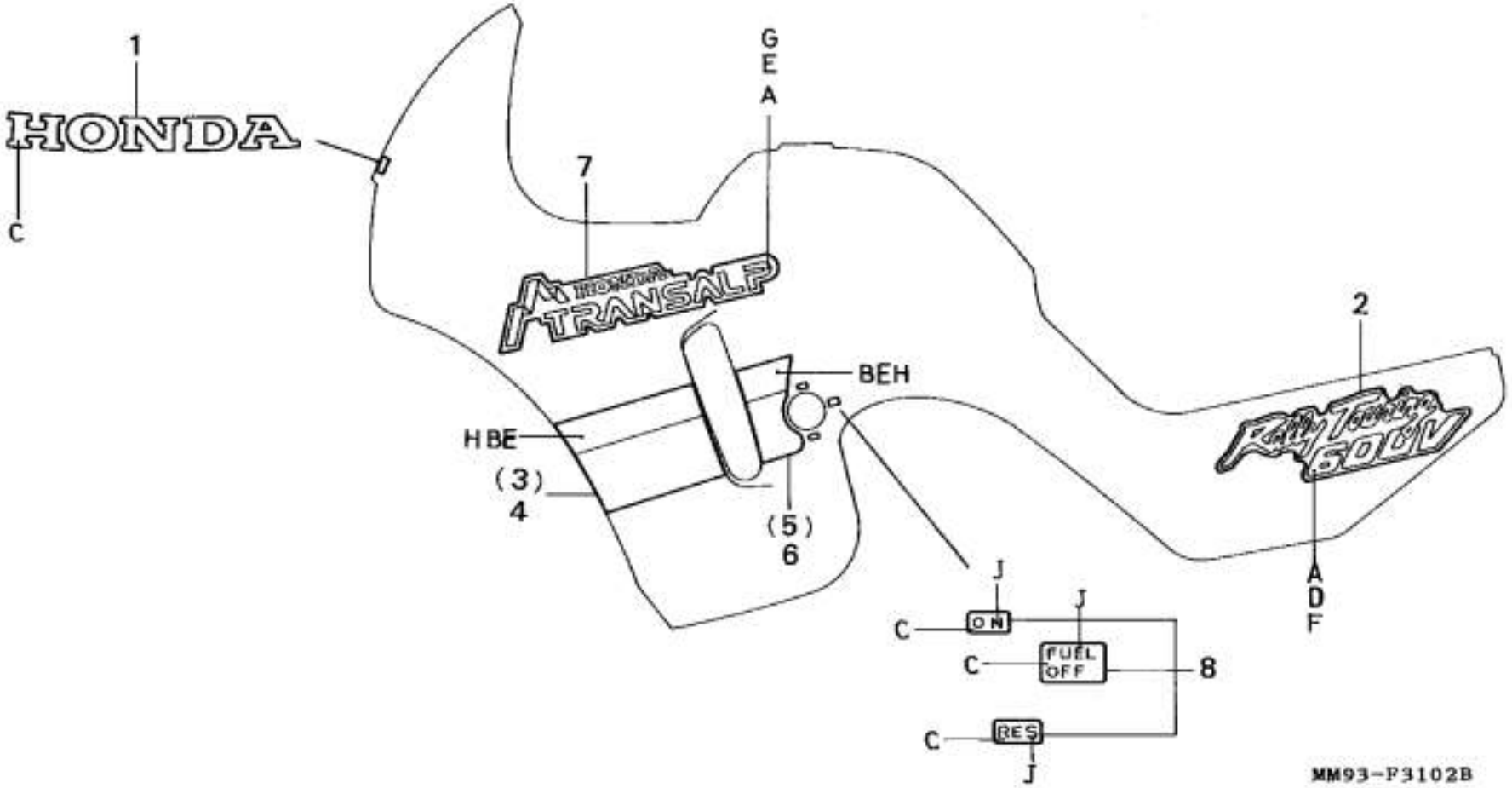
1
HONDA
C
7
G
E
A
HONDA
TRANSALP
2
BEH
HBE
(3)
4
(5)
6
J
C
ON
J
C
FUEL
OFF
8
C
RES
J
A
D
F
MM93-P3102B

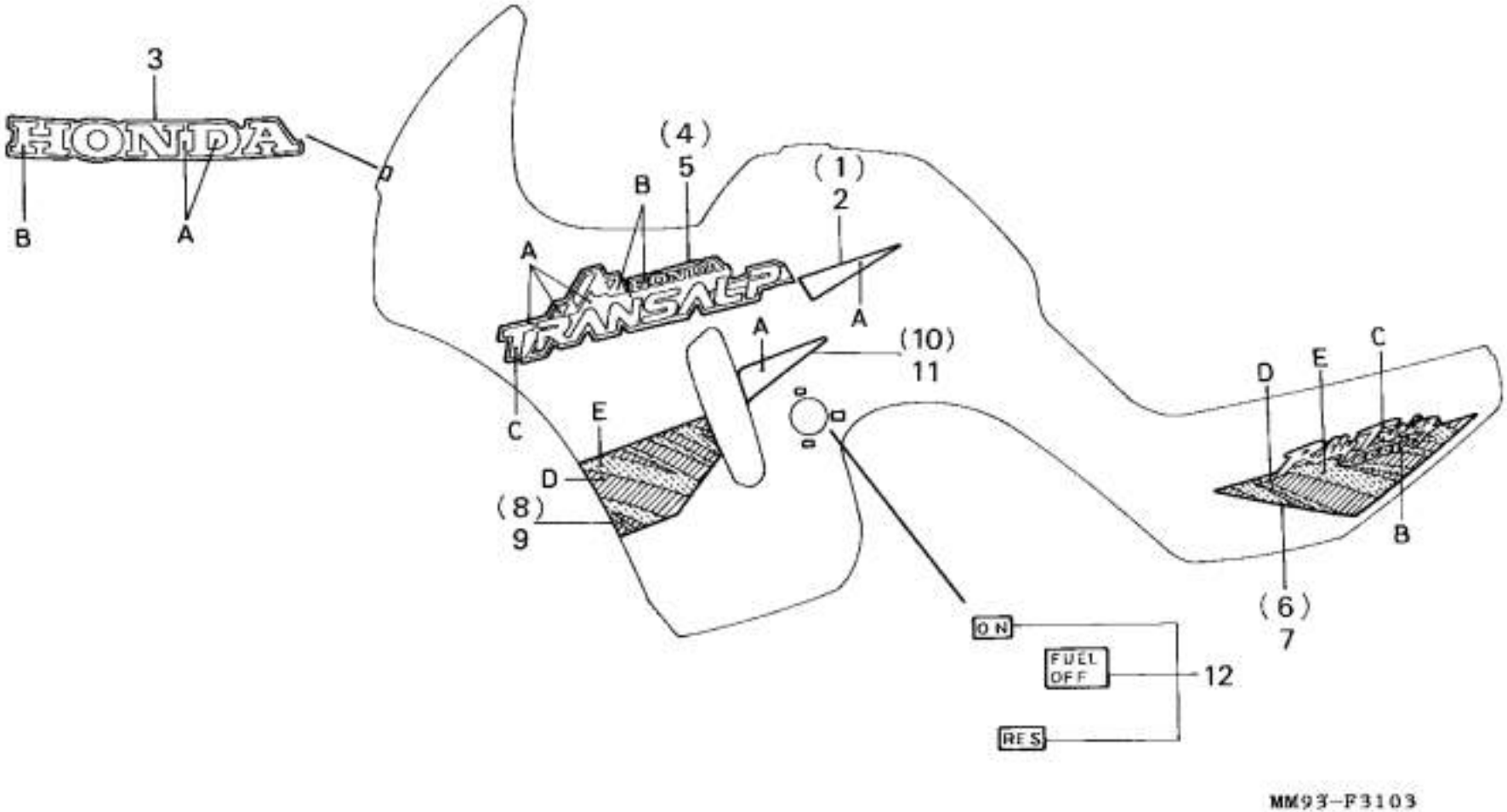
3
HONDA
B
A
(4)
5
B
(1)
2
A
A
HONDA
TRANSALP
A
A
(10)
11
C
E
D
(8)
9
D
E
C
B
(6)
7
ON
FUEL
OFF
12
RES
MM93-F3103

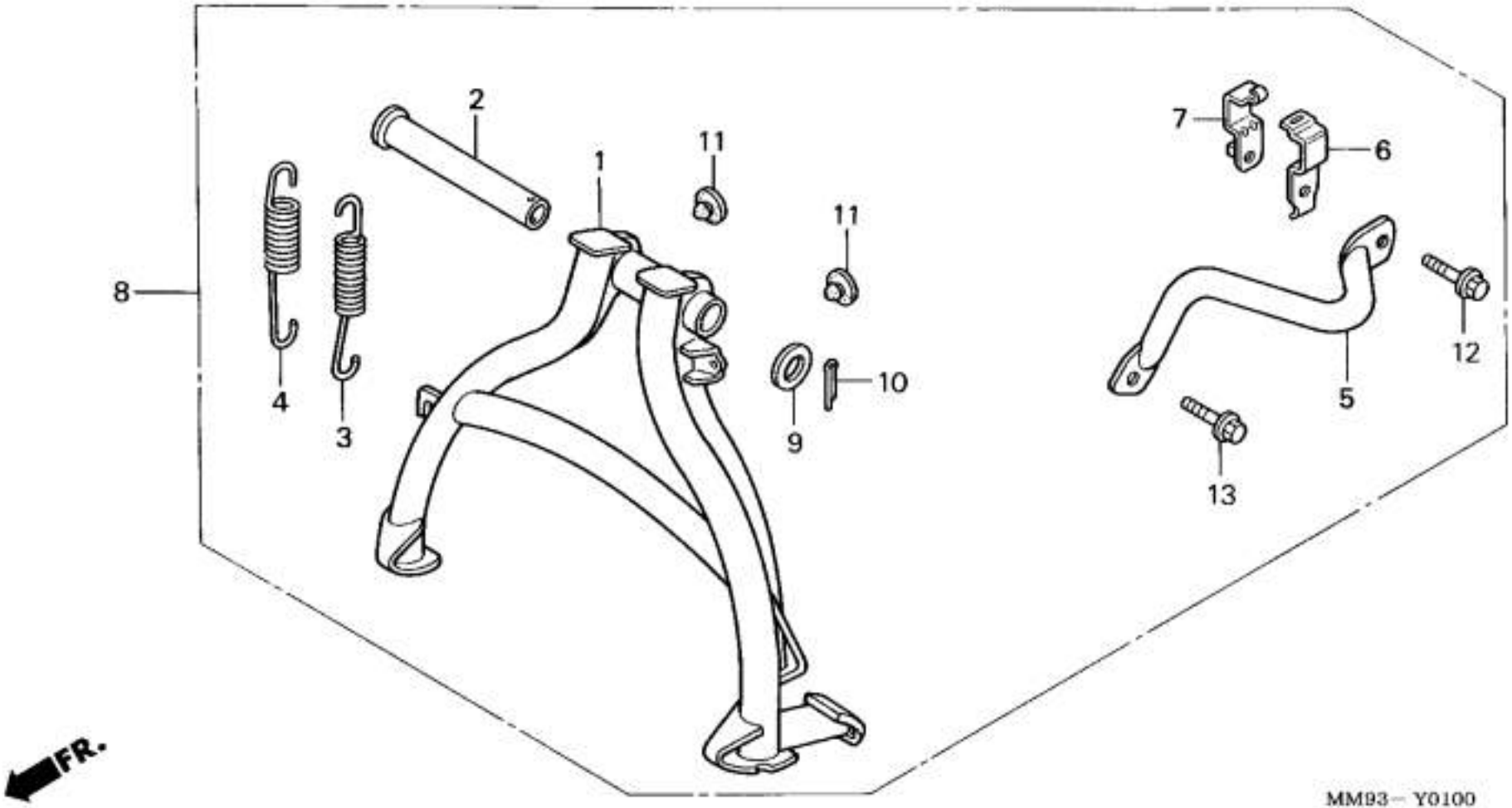
2
1
11
11
8
7
6
4
3
10
9
5
12
13
FR.
MM93 – Y0100

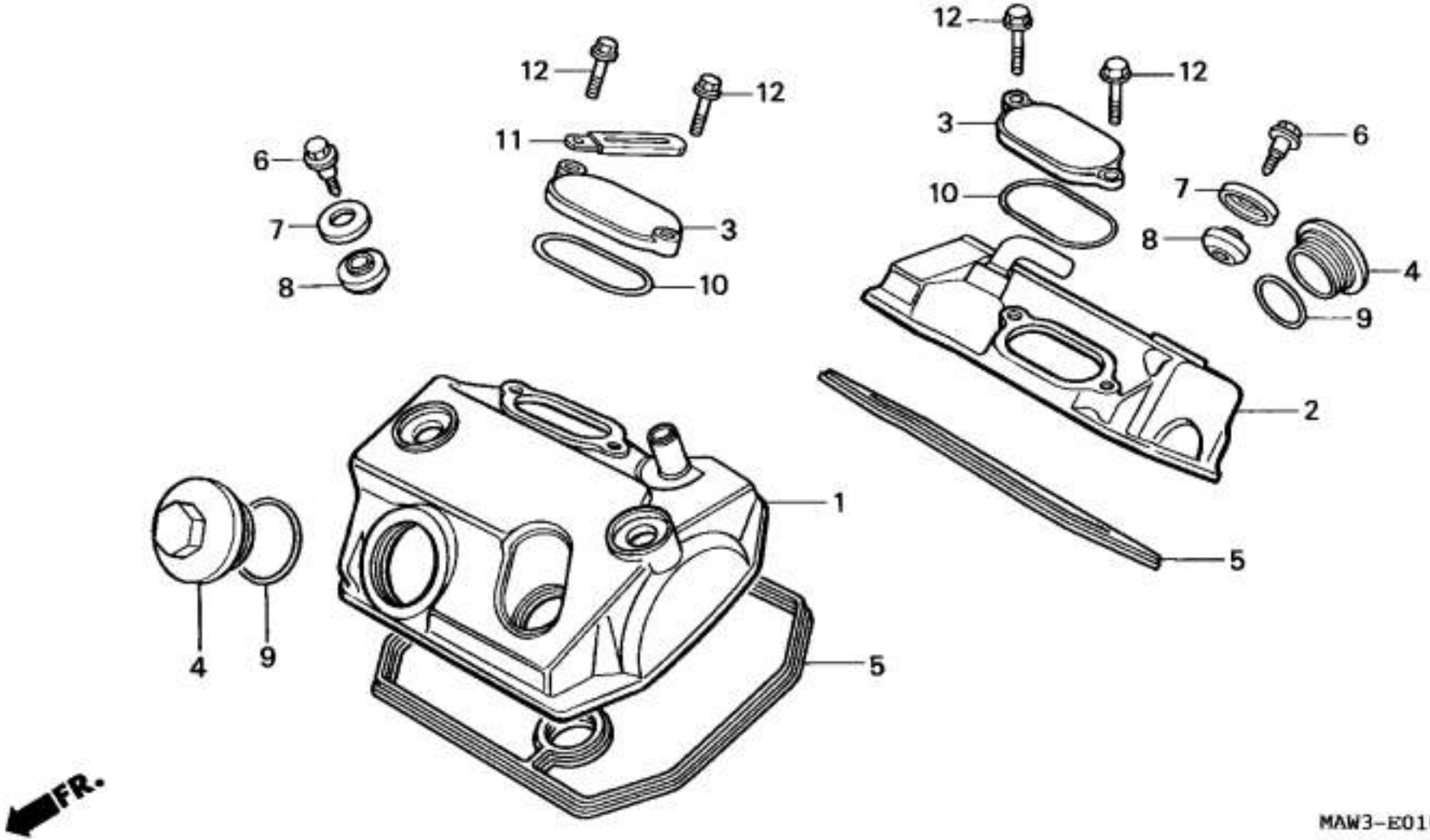
12
12
12
12
11
6
7
8
3
10
3
10
6
7
8
4
9
2
1
5
4
9
5
FR.
MAW3-E0100

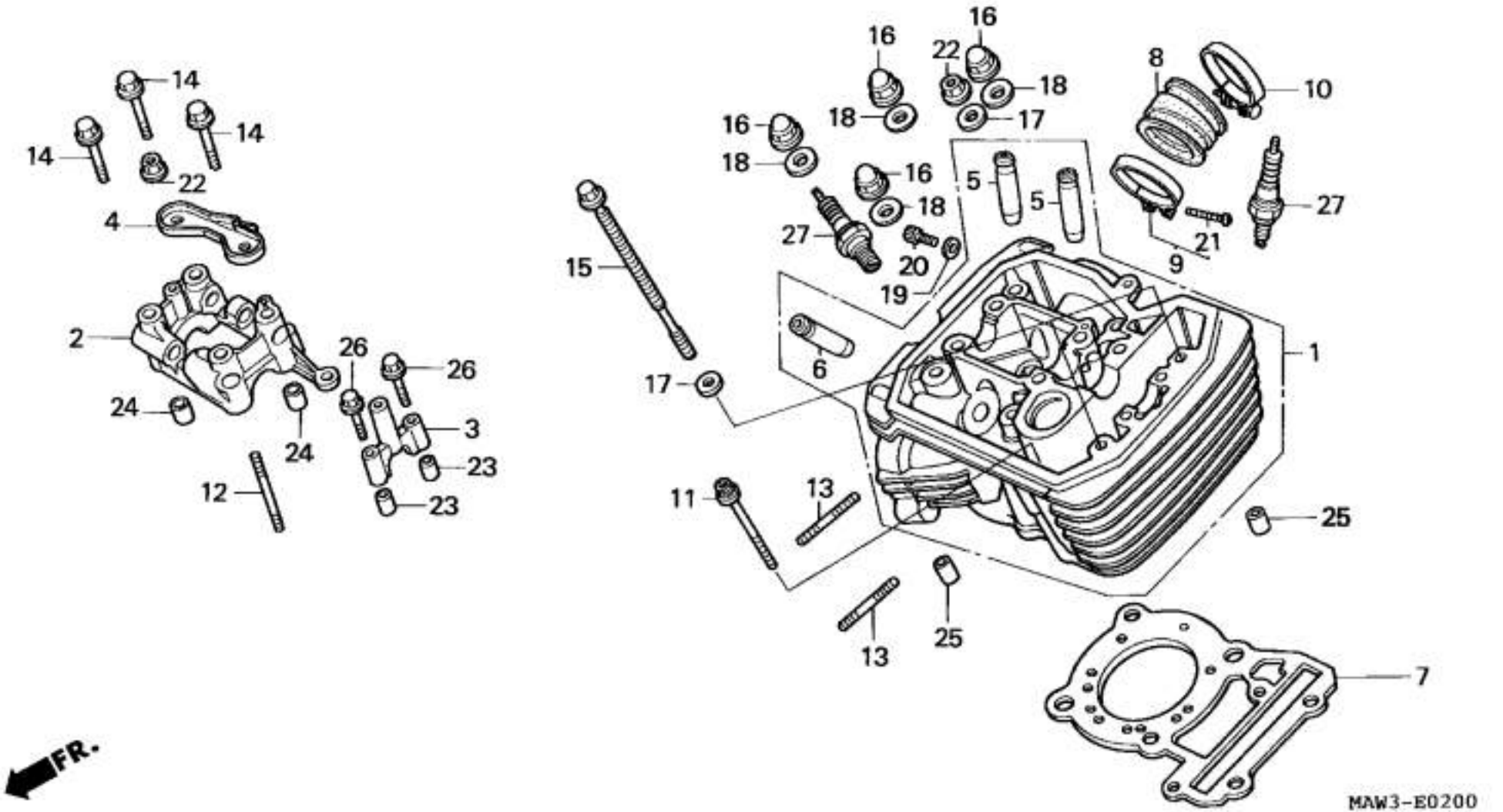
14
14
14
22
4
2
26
26
24
24
3
23
23
12
16
16
22
18
18
17
16
18
16
18
27
20
19
5
5
8
10
27
21
9
15
6
1
17
11
13
25
13
25
7
FR.
MAW3-E0200

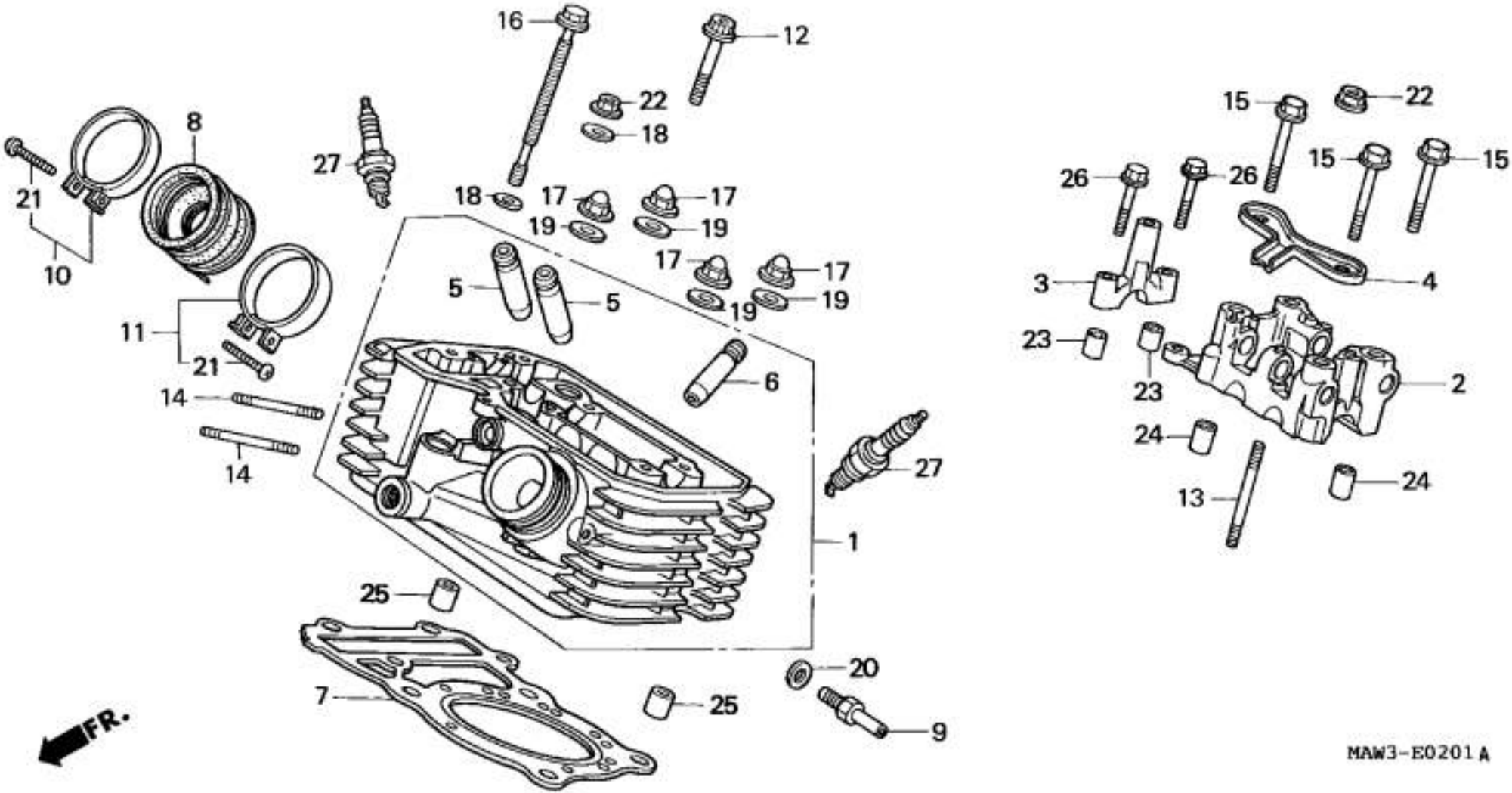
16
12
22
18
27
18
17
17
19
19
17
17
19
19
8
21
10
11
21
5
5
6
14
14
27
1
25
20
7
25
9
FR.
15
22
15
15
26
26
3
4
23
23
2
24
24
13
MAW3-E0201A

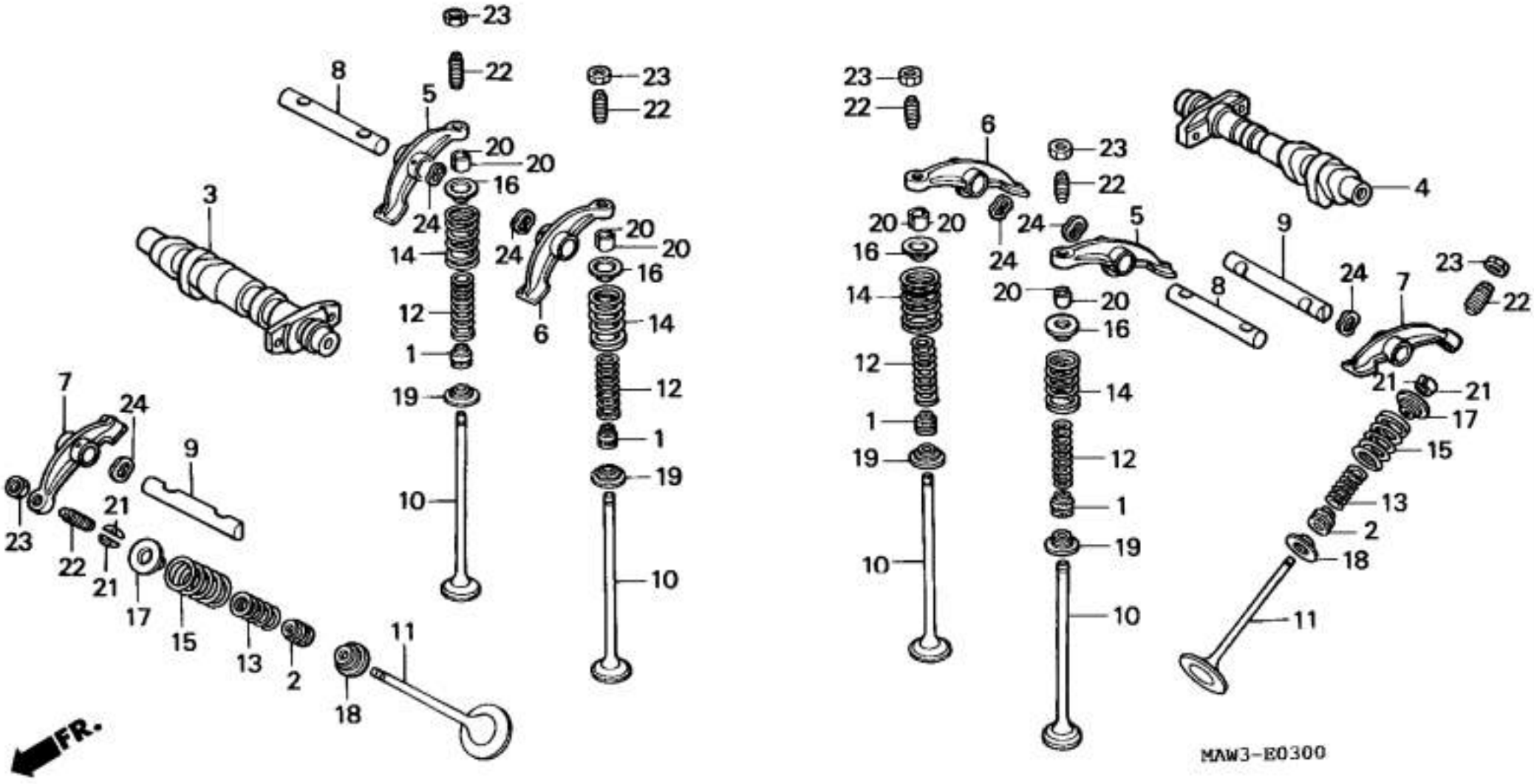
FR.
MAW3-E0300

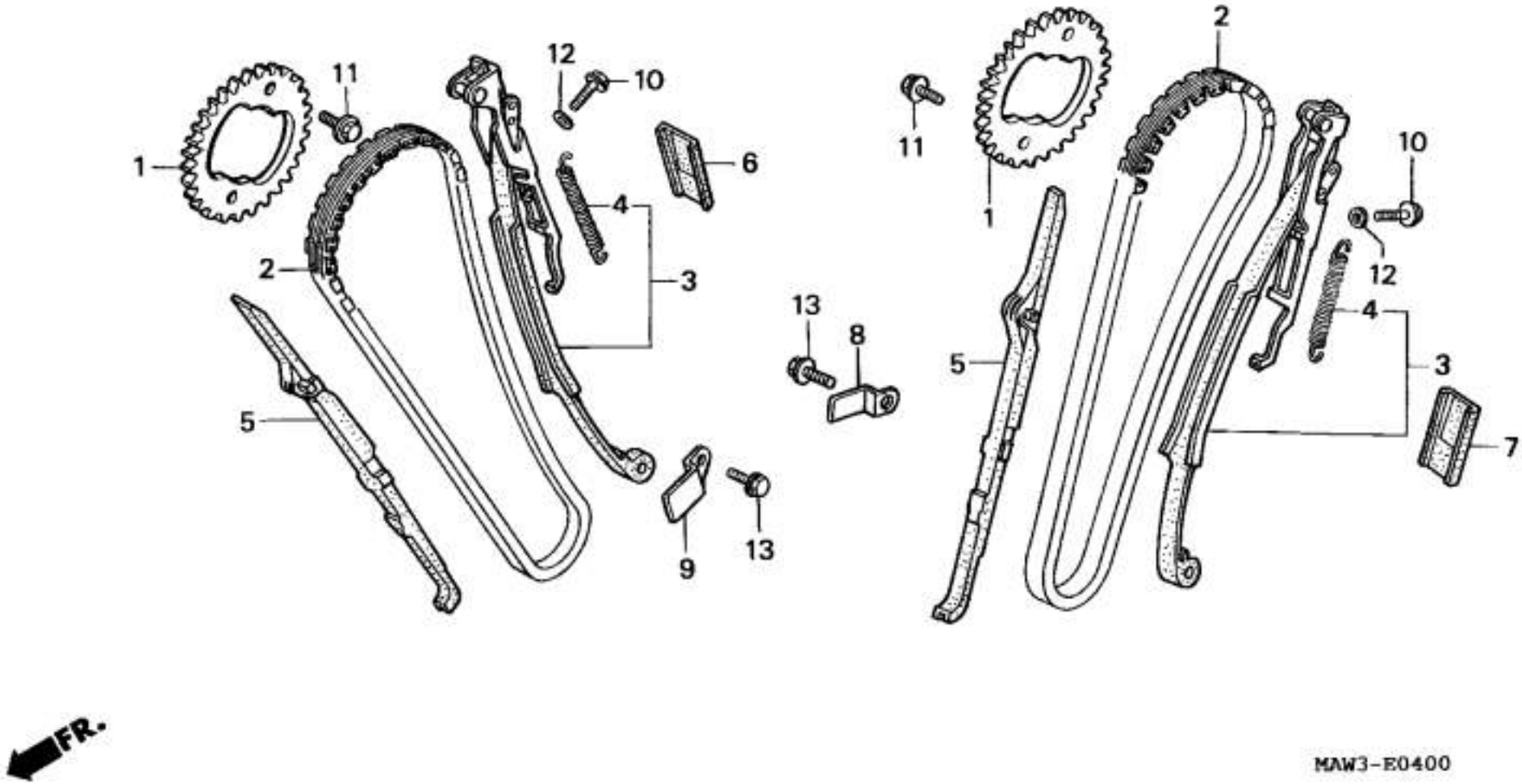
1
11
12
10
6
4
2
3
5
9
13
13
8
11
1
2
10
12
4
5
3
7
FR.
MAW3-E0400

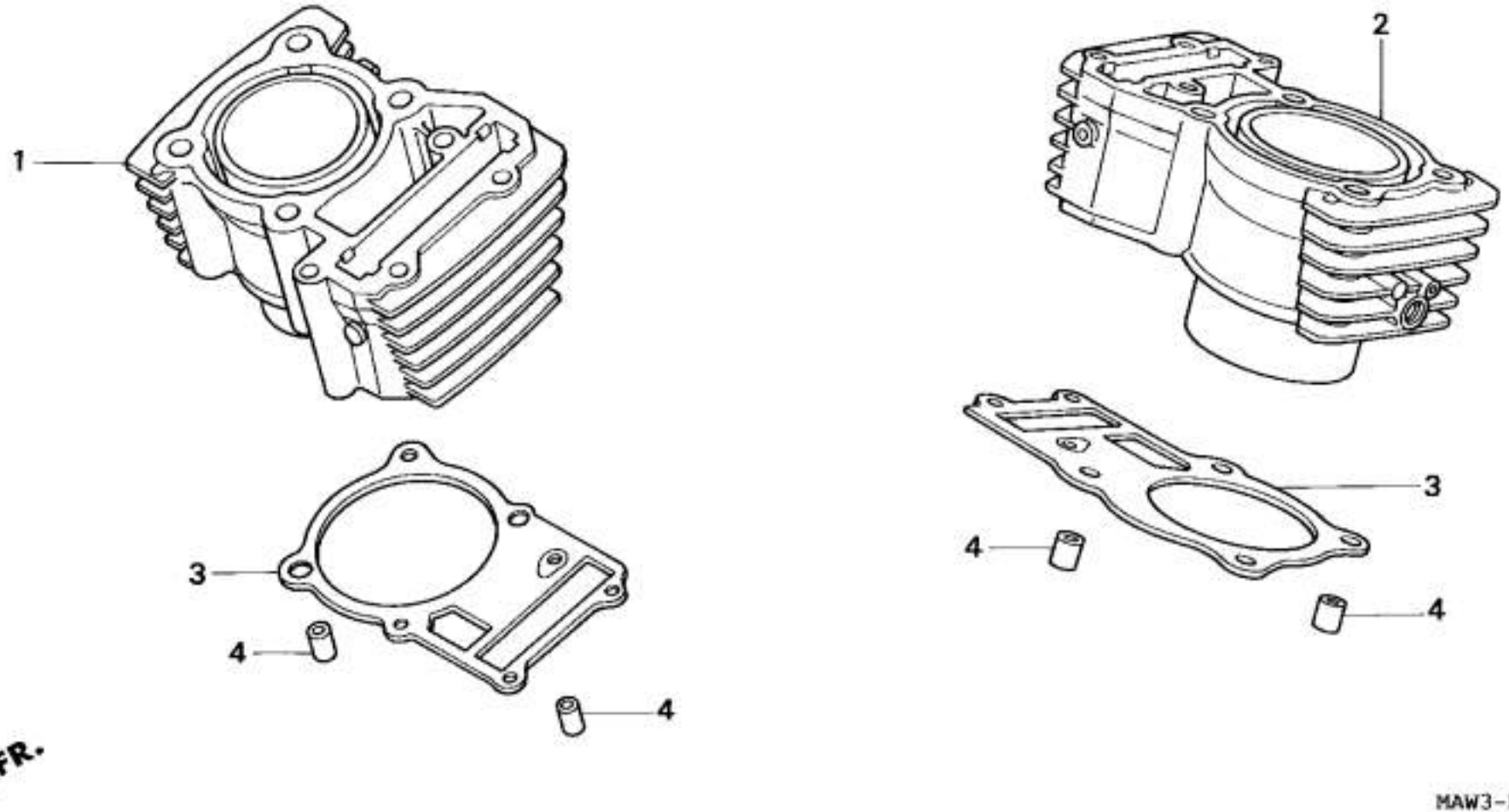

MAW3-E0500

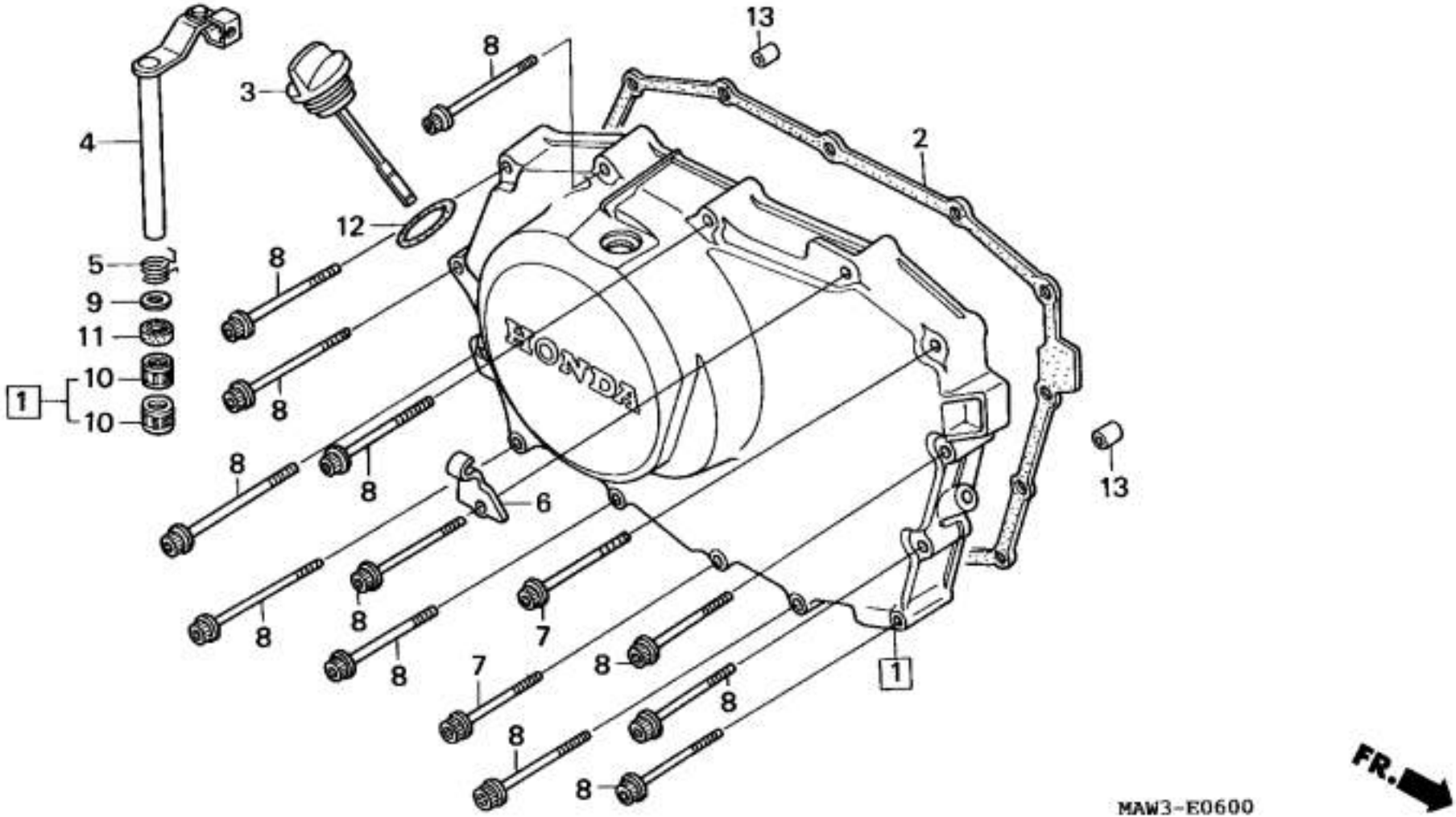

13
8
3
4
2
12
5
8
9
11
10
1
10
8
8
8
6
13
8
8
7
8
8
7
8
1
8
8
8
FR.
MAW3-E0600

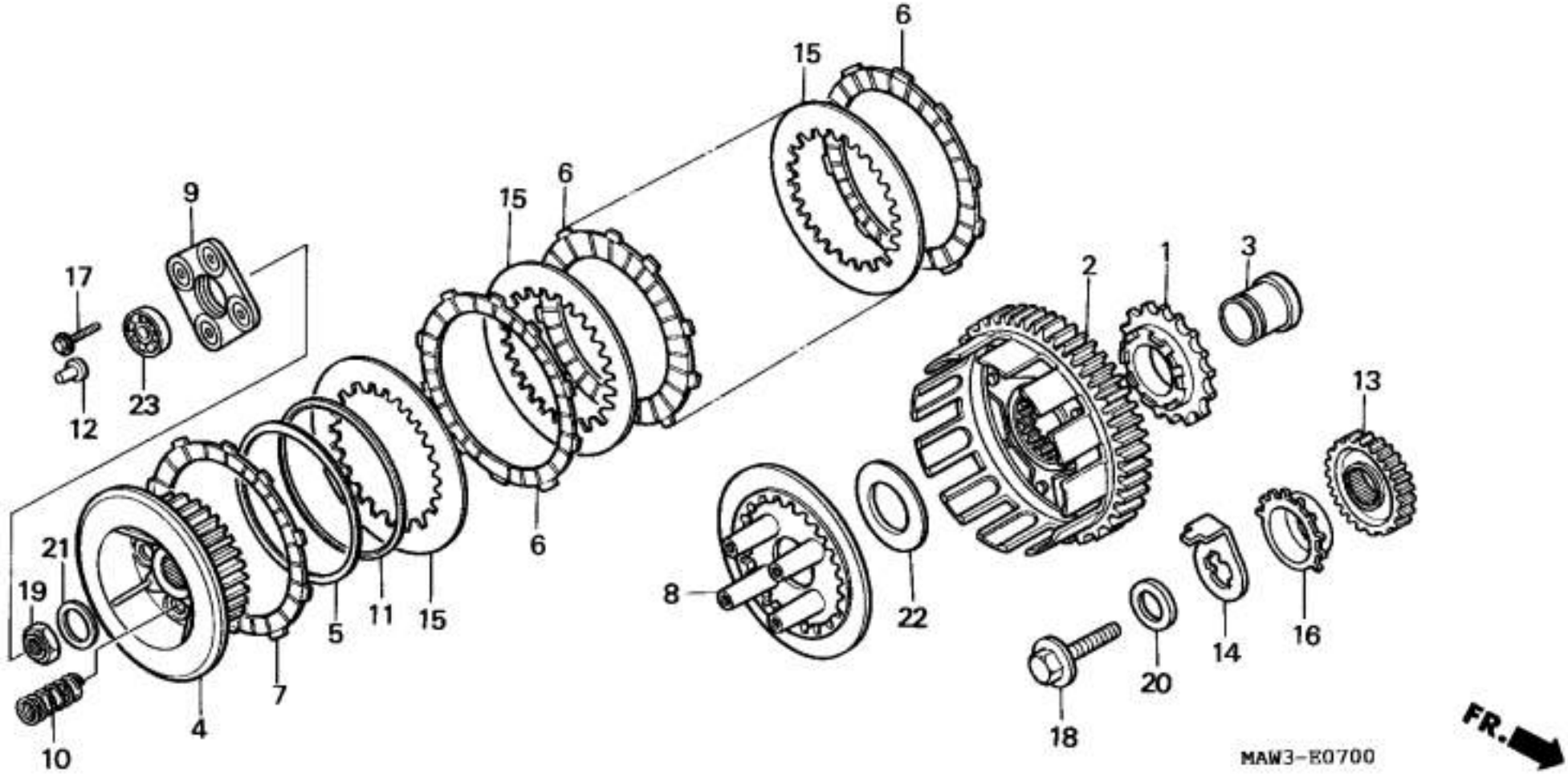
1
2
3
4
5
6
7
8
9
10
11
12
13
14
15
16
17
18
19
20
21
22
23
MAW3-E0700
FR.

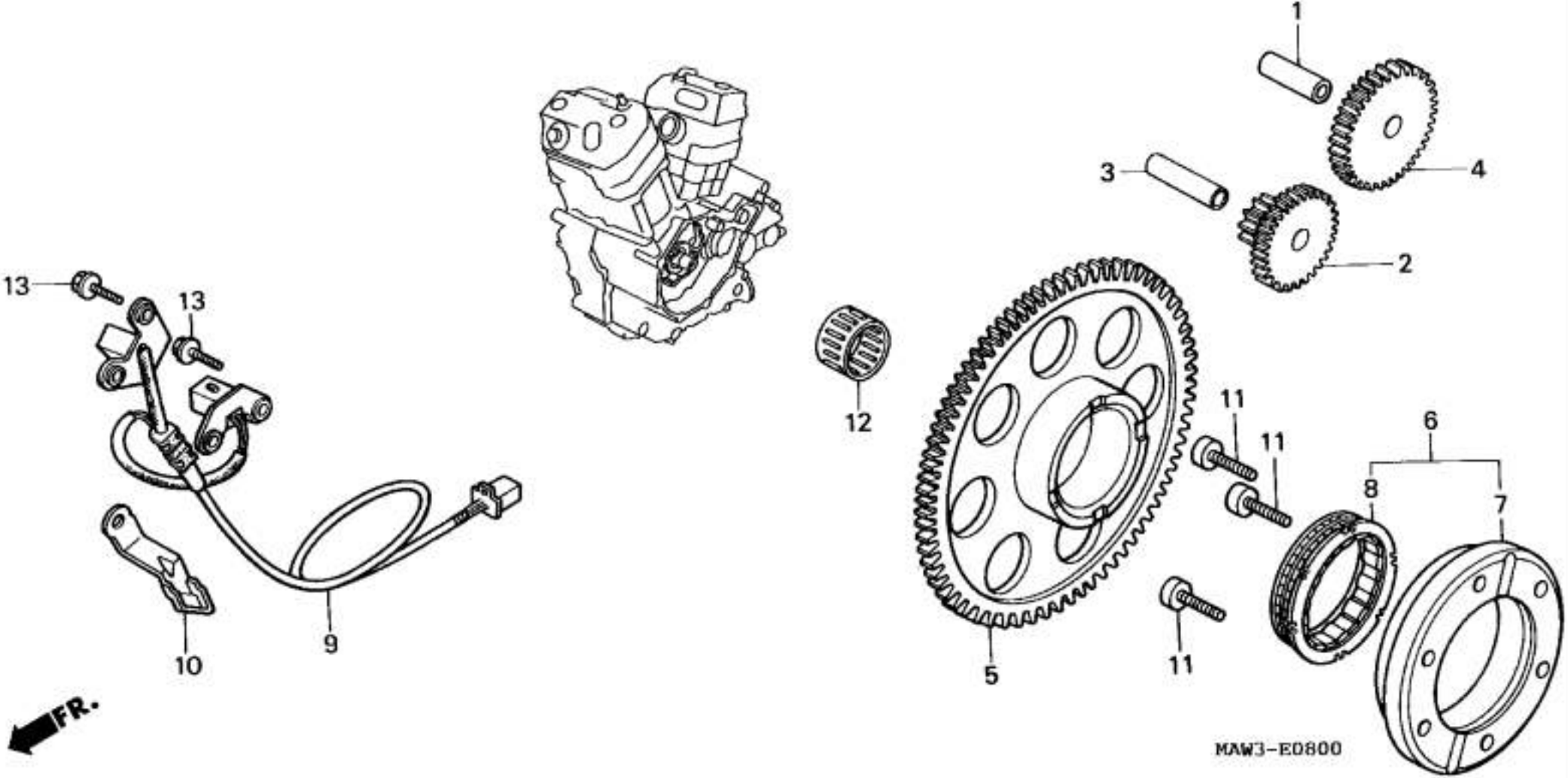
1
2
3
4
5
6
7
8
9
10
11
11
11
12
13
13
FR.
MAW3-E0800

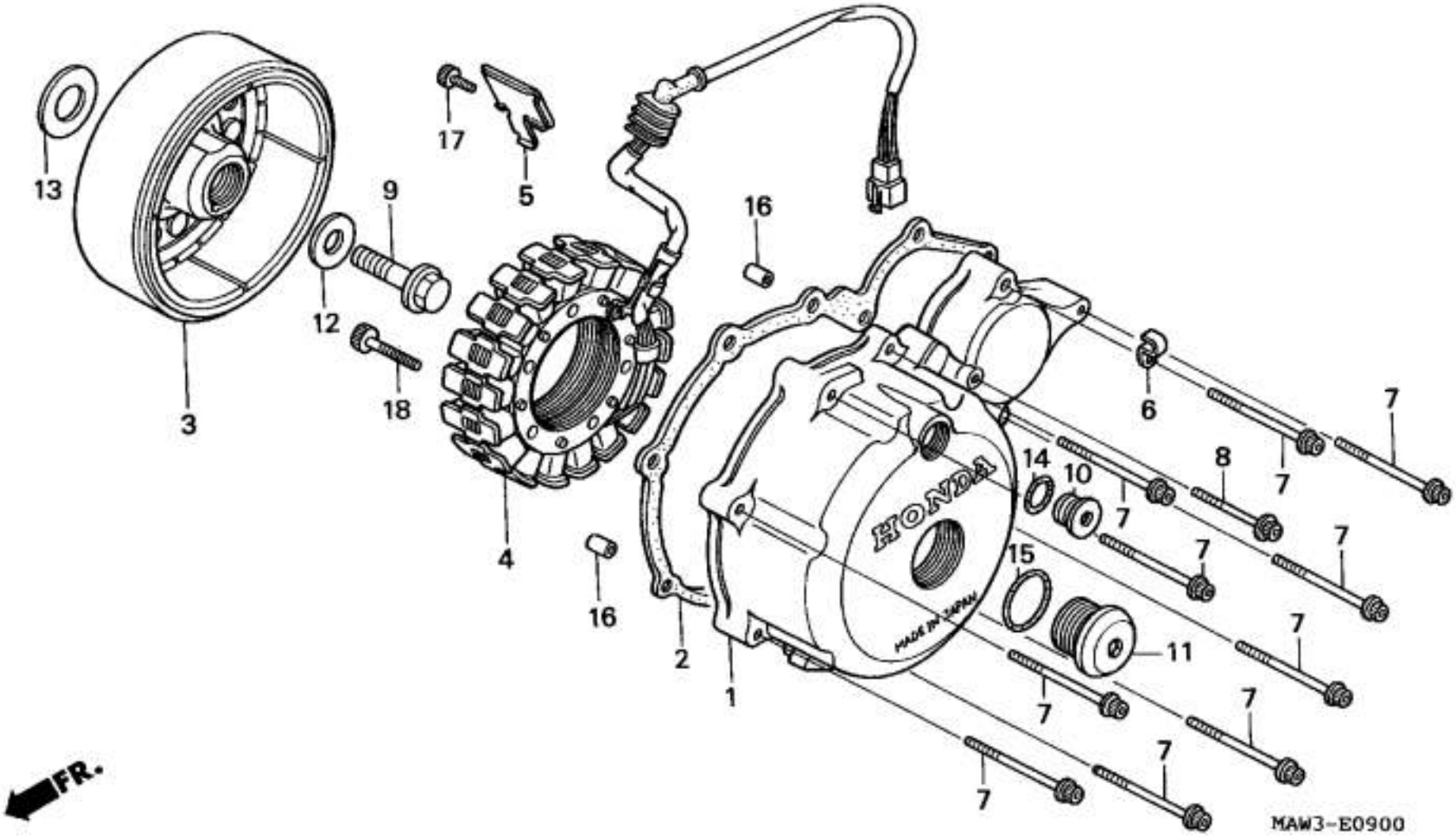
13
3
9
12
18
17
5
4
16
16
2
1
6
7
8
14
10
15
11
HONDA
MADE IN JAPAN
FR.
MAW3-E0900

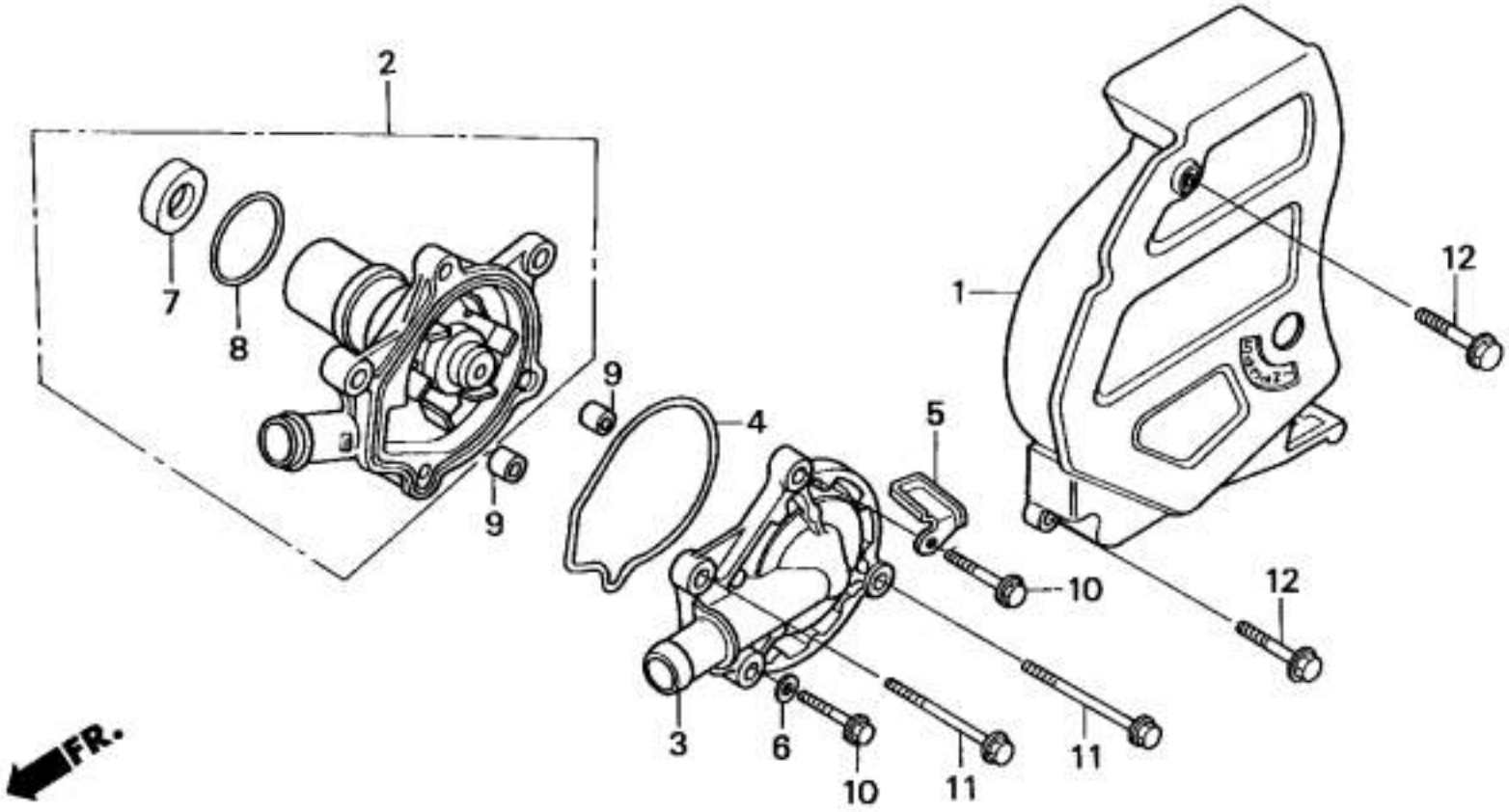

MAW3-E1000

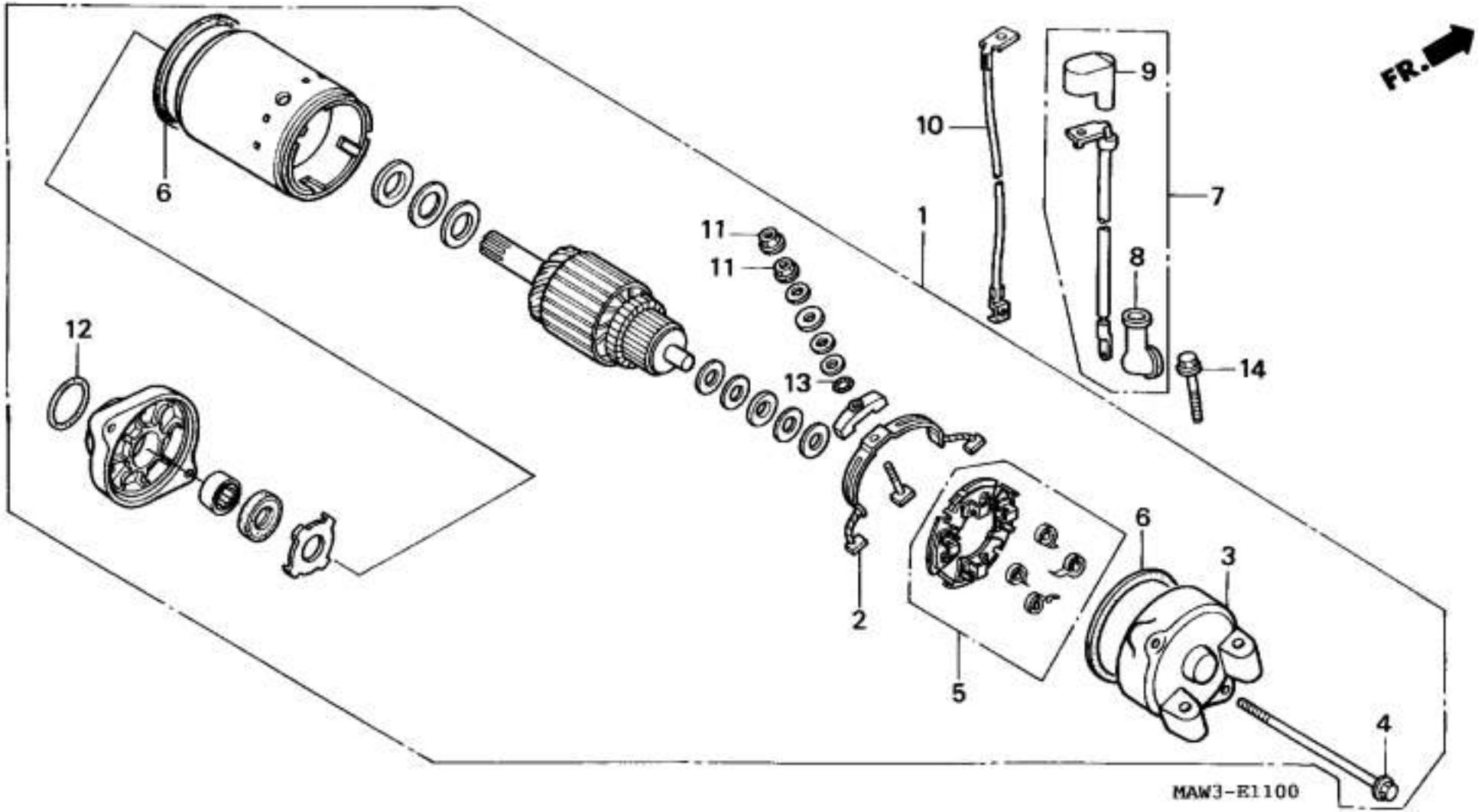
FR.
1
2
3
4
5
6
6
7
8
9
10
11
11
12
13
14
MAW3-E1100

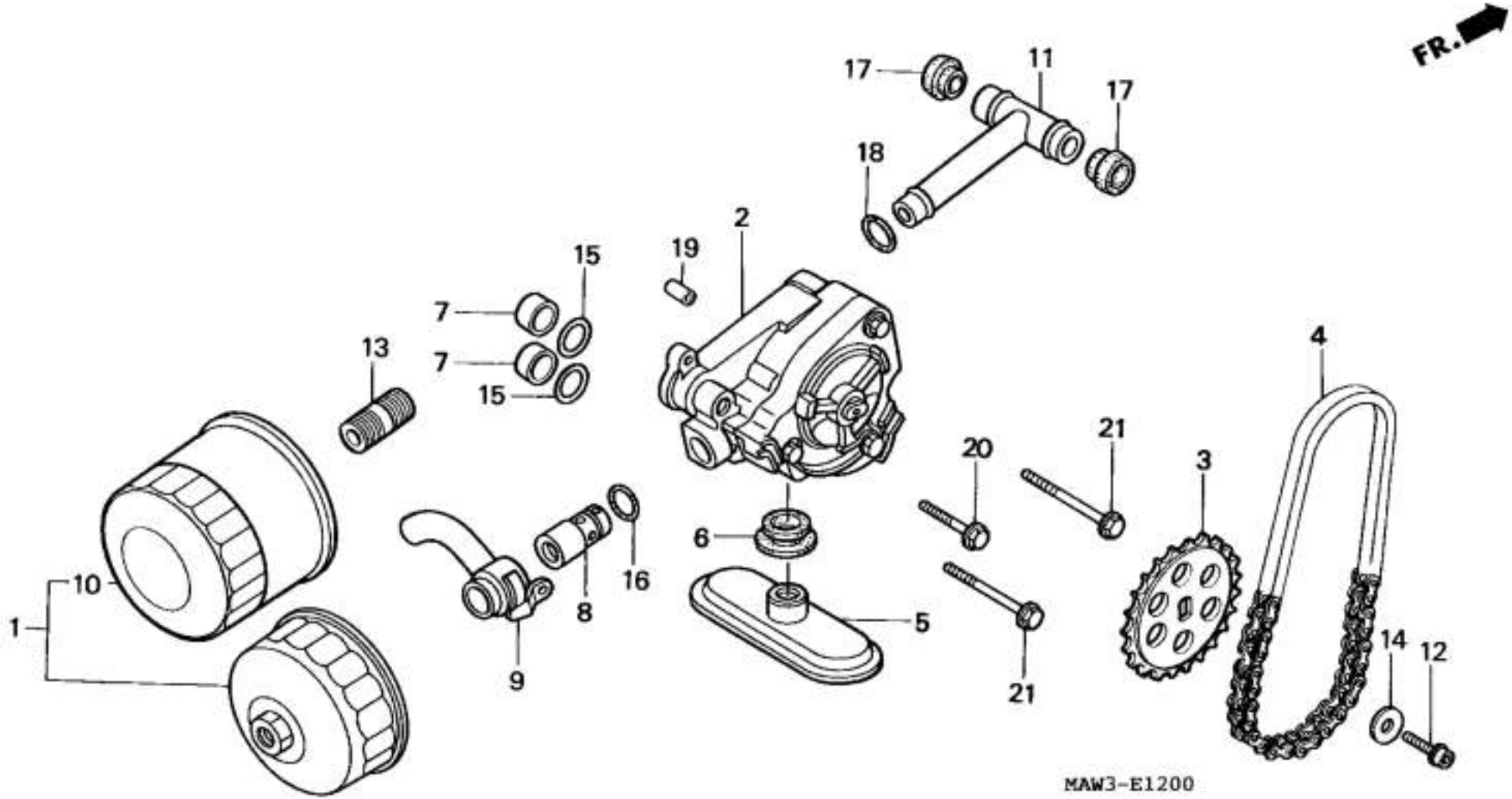
FR.
17
11
17
18
2
19
15
7
7
15
13
4
21
20
3
6
16
8
10
1
5
9
21
14
12
MAW3-E1200

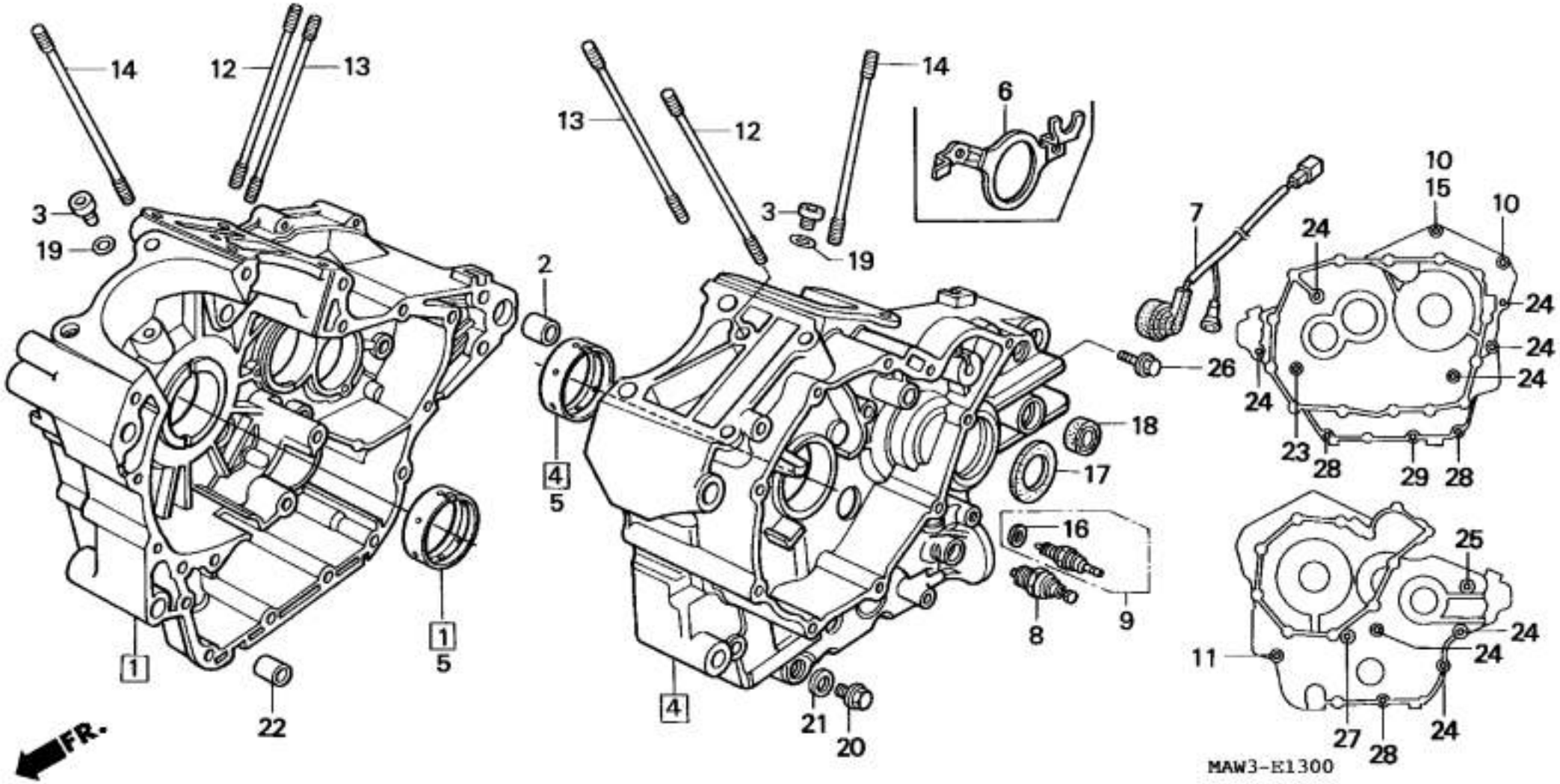
14
12
13
3
19
1
22
1
5
13
12
14
6
3
19
2
4
5
4
21
20
7
26
10
15
10
24
24
24
24
24
24
23
28
29
28
18
17
16
8
9
25
24
24
11
27
28
24
FR.
MAW3-E1300

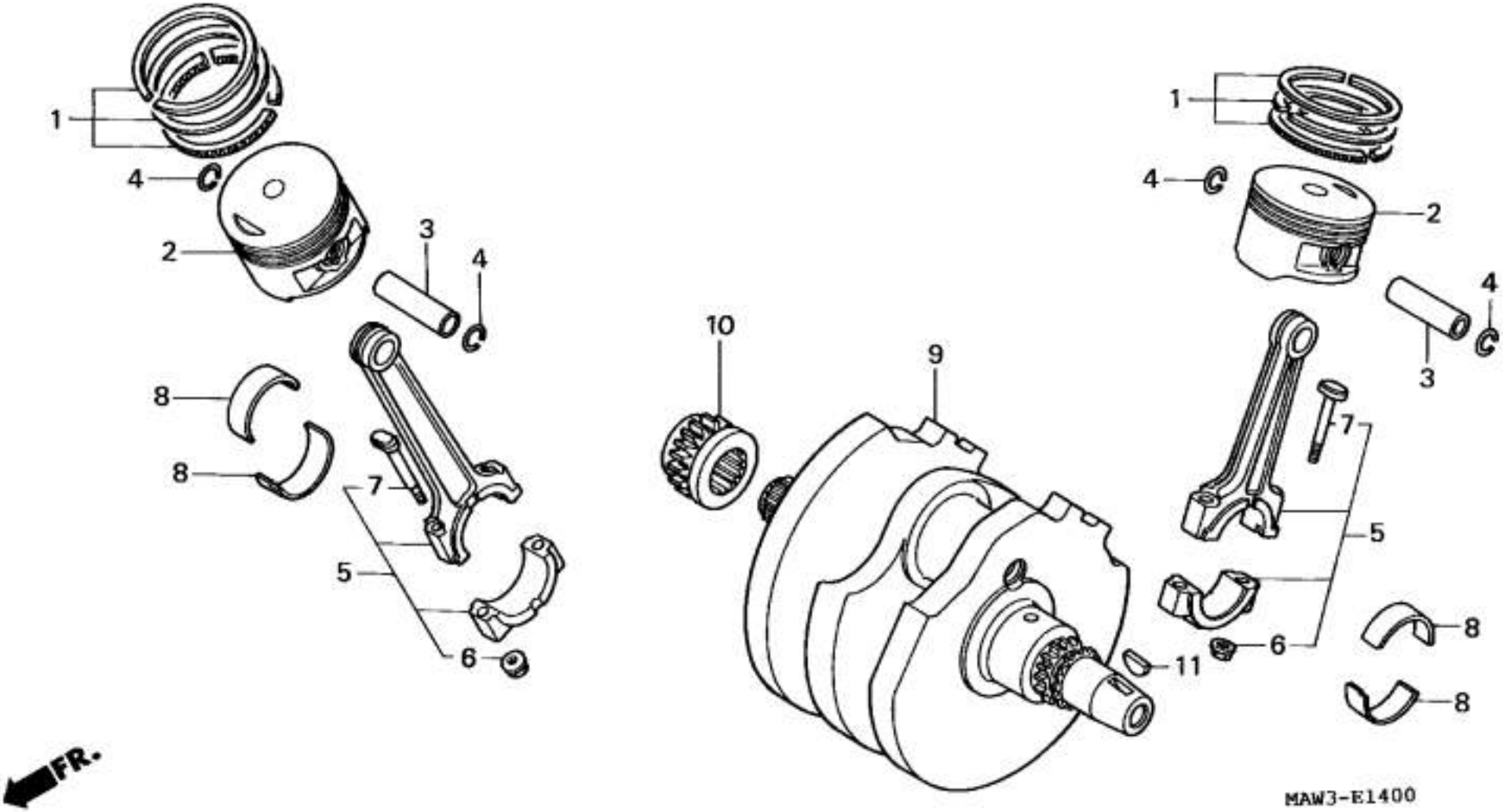
1
4
2
3
4
8
8
7
5
6
10
9
11
1
4
2
4
3
7
5
6
8
8
FR.
MAW3-E1400

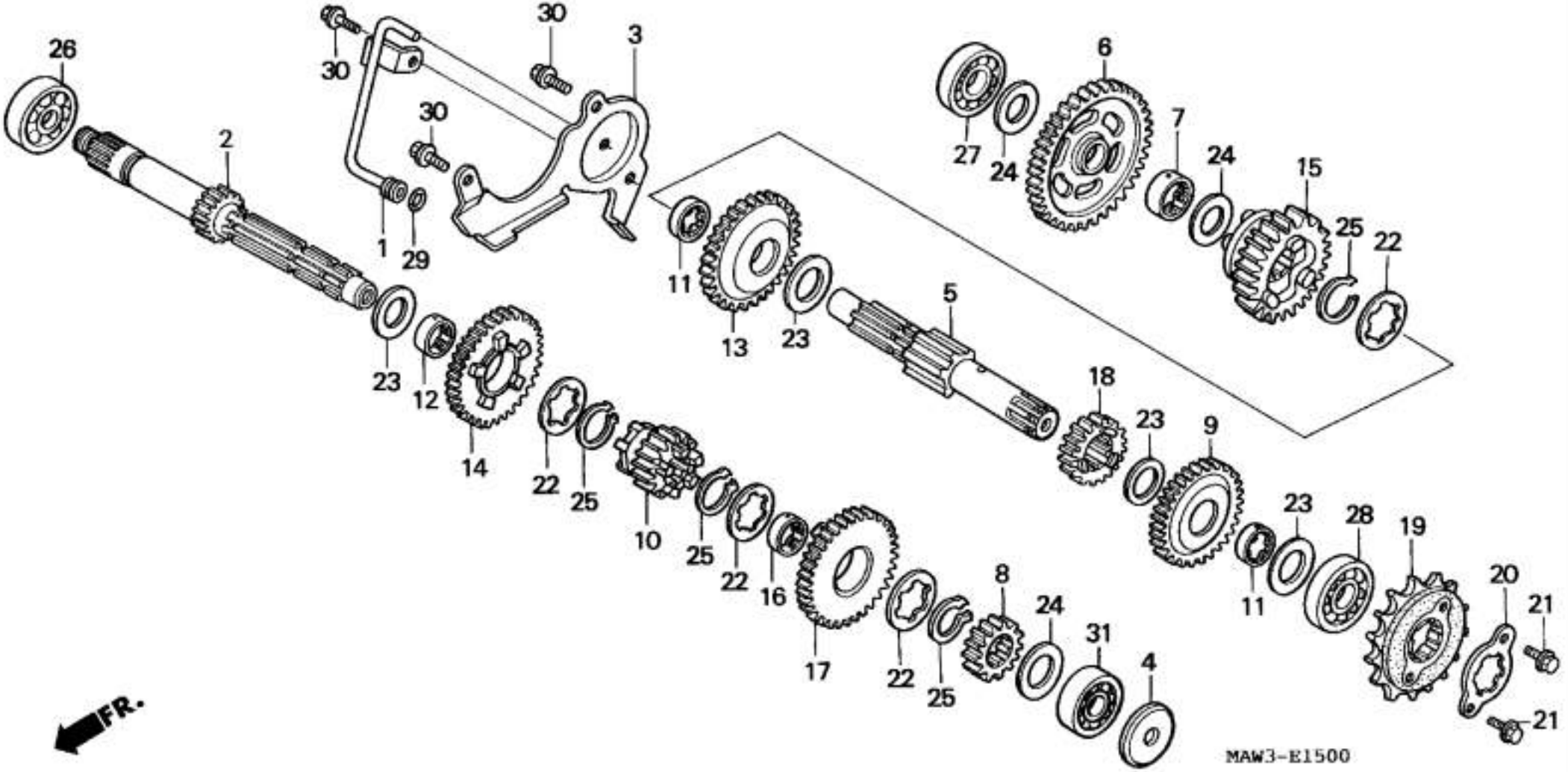
26
30
30
3
30
2
1
29
27
24
6
7
24
15
25
22
11
13
23
5
23
12
14
22
25
10
25
22
16
17
22
25
18
23
9
8
24
31
4
11
23
28
19
20
21
21
FR.
MAW3-E1500

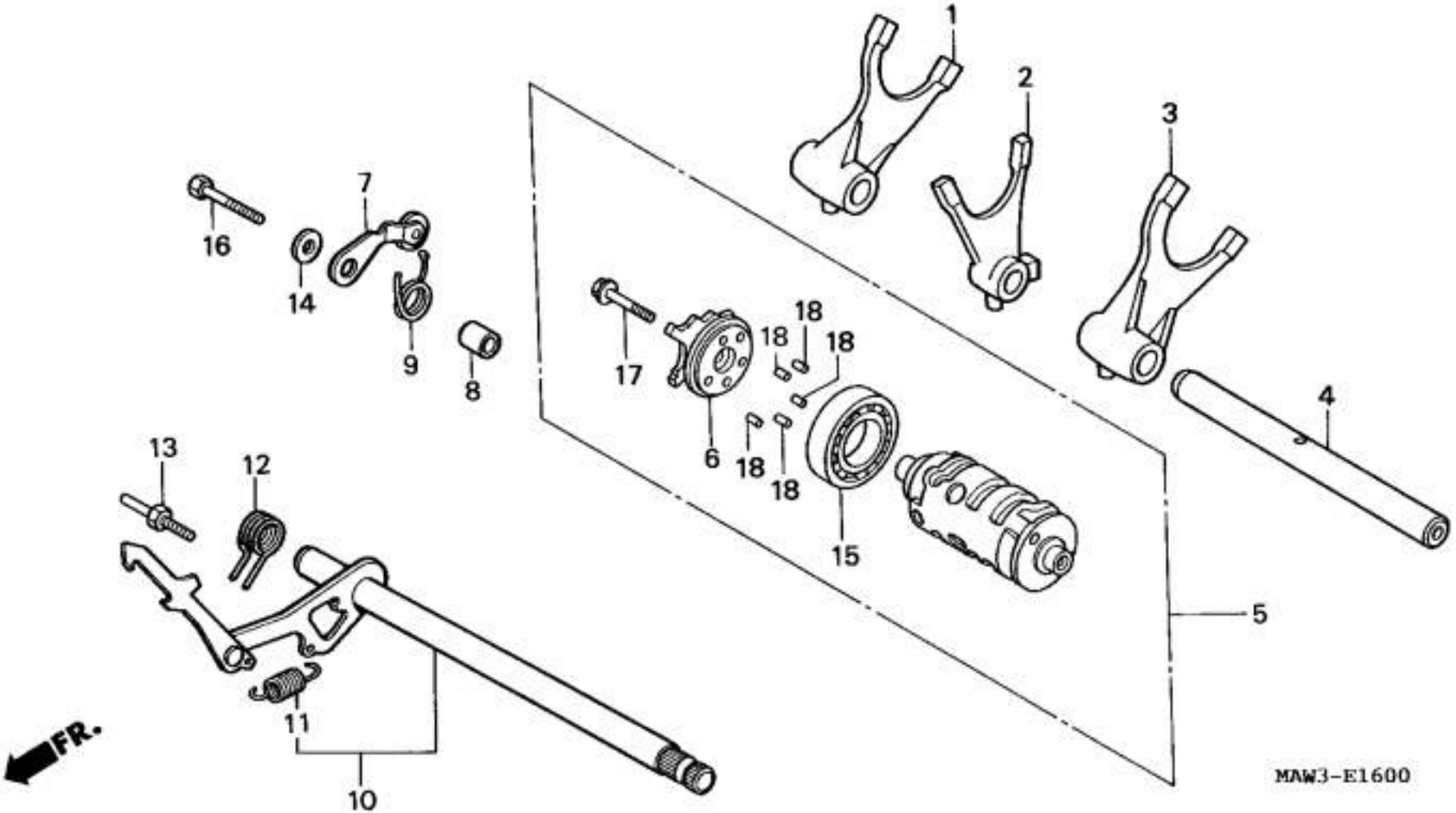
1
2
3
4
5
6
7
8
9
10
11
12
13
14
15
16
17
18
18
18
18
18
18
FR.
MAW3-E1600

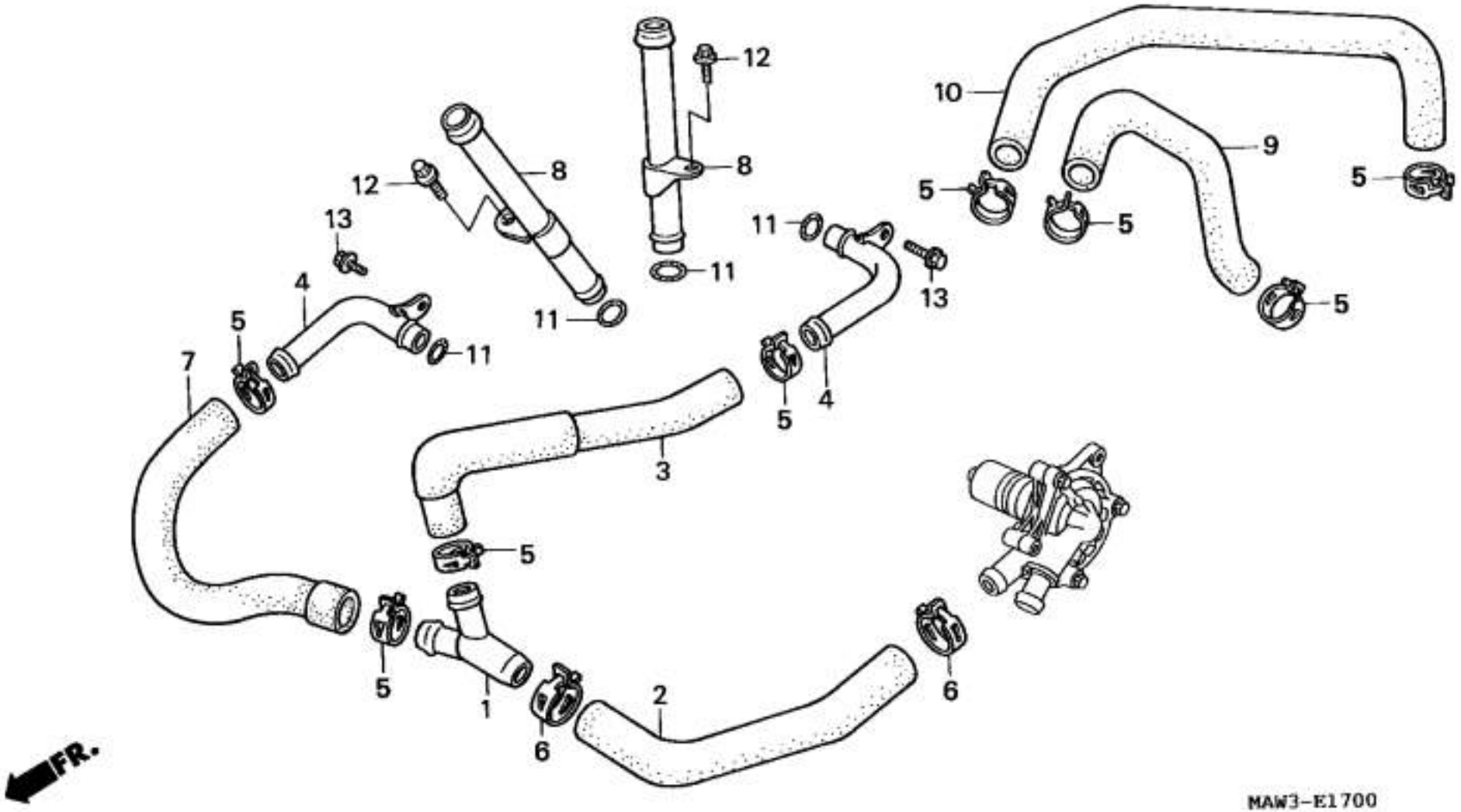

12
10
9
8
8
12
5
5
5
13
11
11
13
4
5
11
11
5
7
5
4
3
5
5
1
2
6
6
FR.
MAW3-E1700

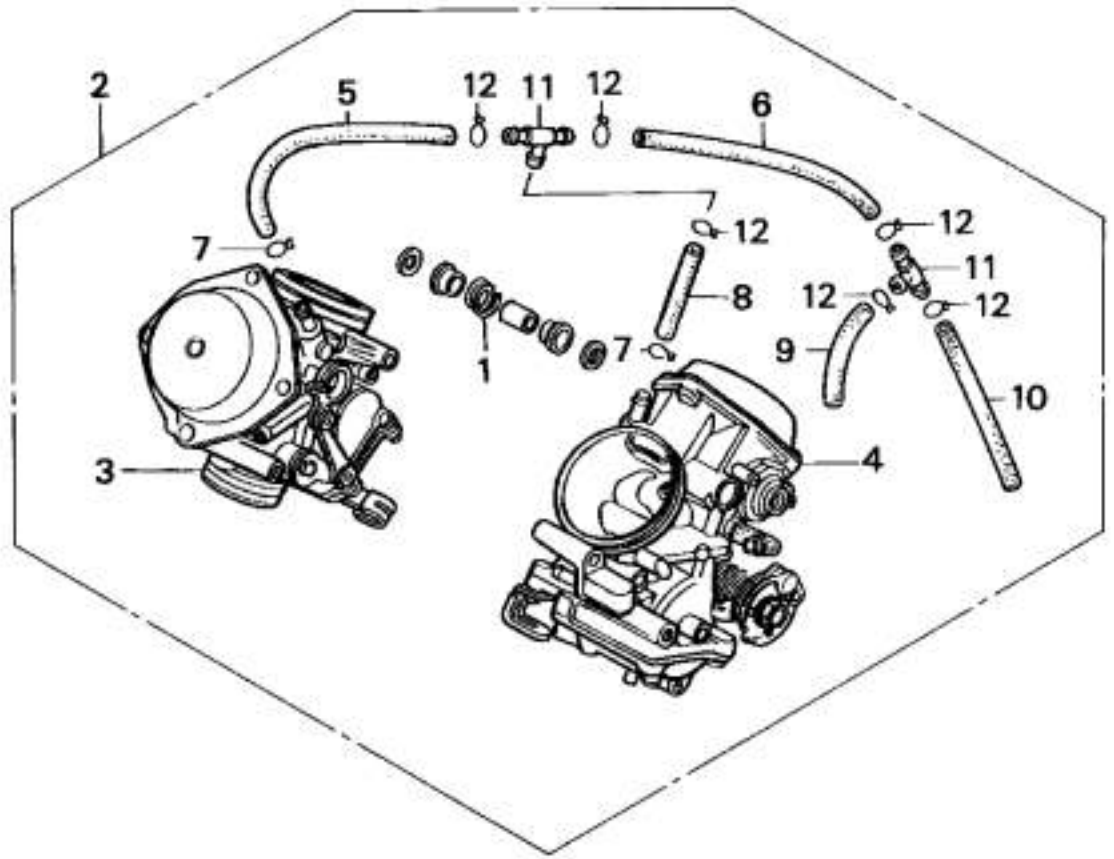

FR.

MAW3-E1800

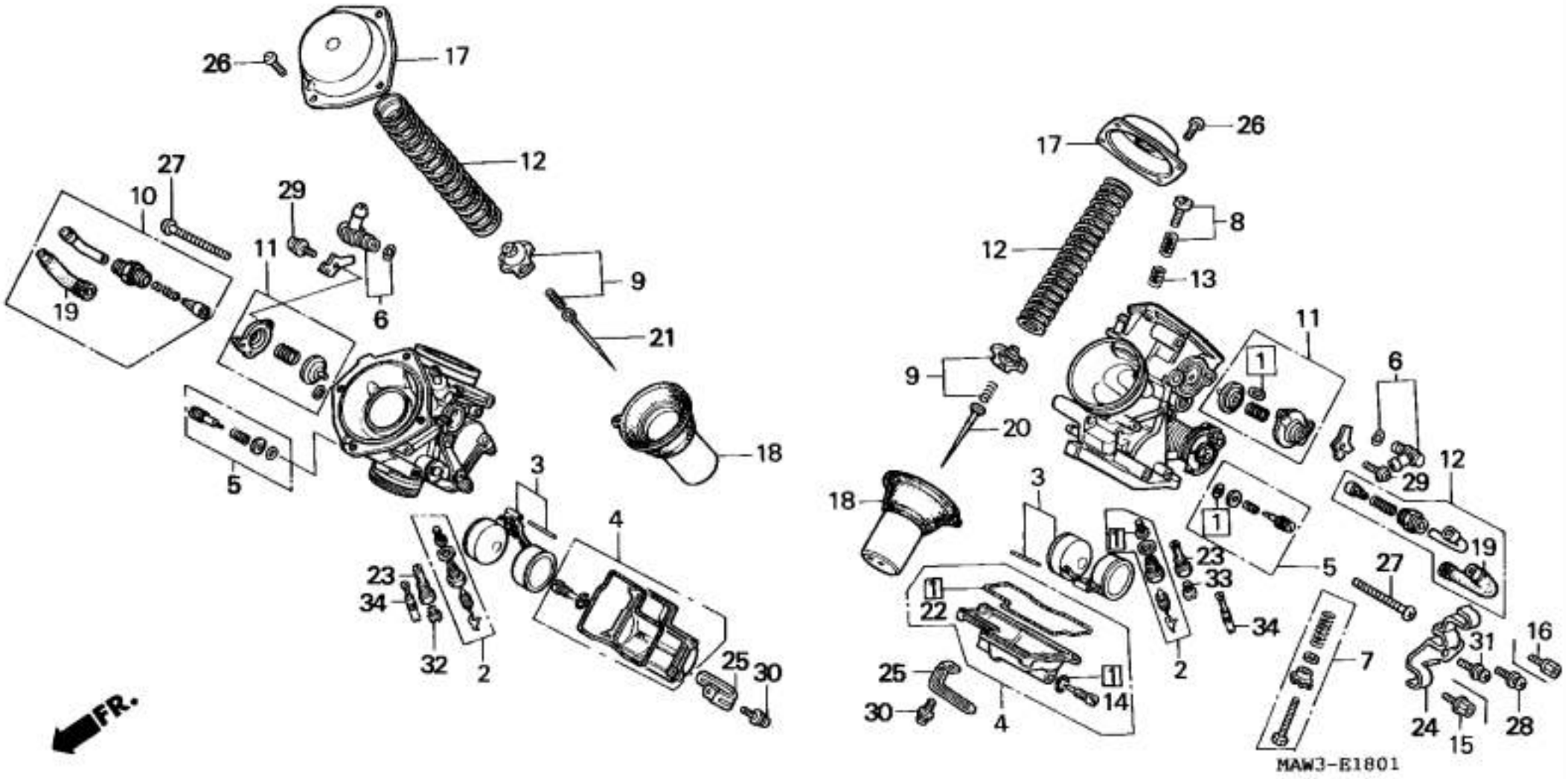

26
17
12
27
10
29
11
6
9
19
21
5
18
3
4
23
34
32
2
25
30
FR.
17
26
8
12
13
11
1
6
9
20
29
12
18
3
1
23
33
5
27
19
1
22
34
2
7
31
16
25
1
14
30
4
24
15
28
MAW3-E1801

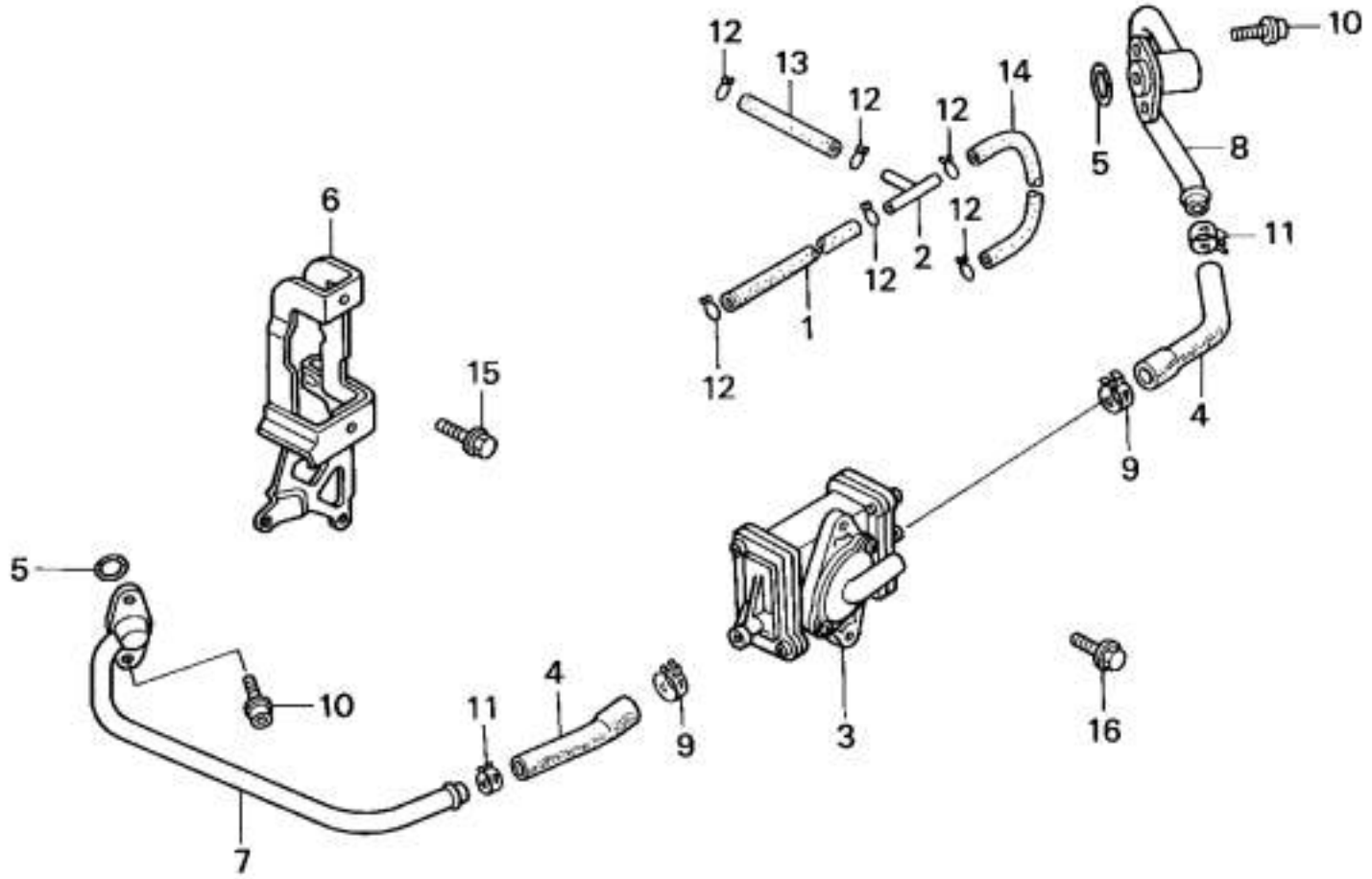

MAW3-E1900

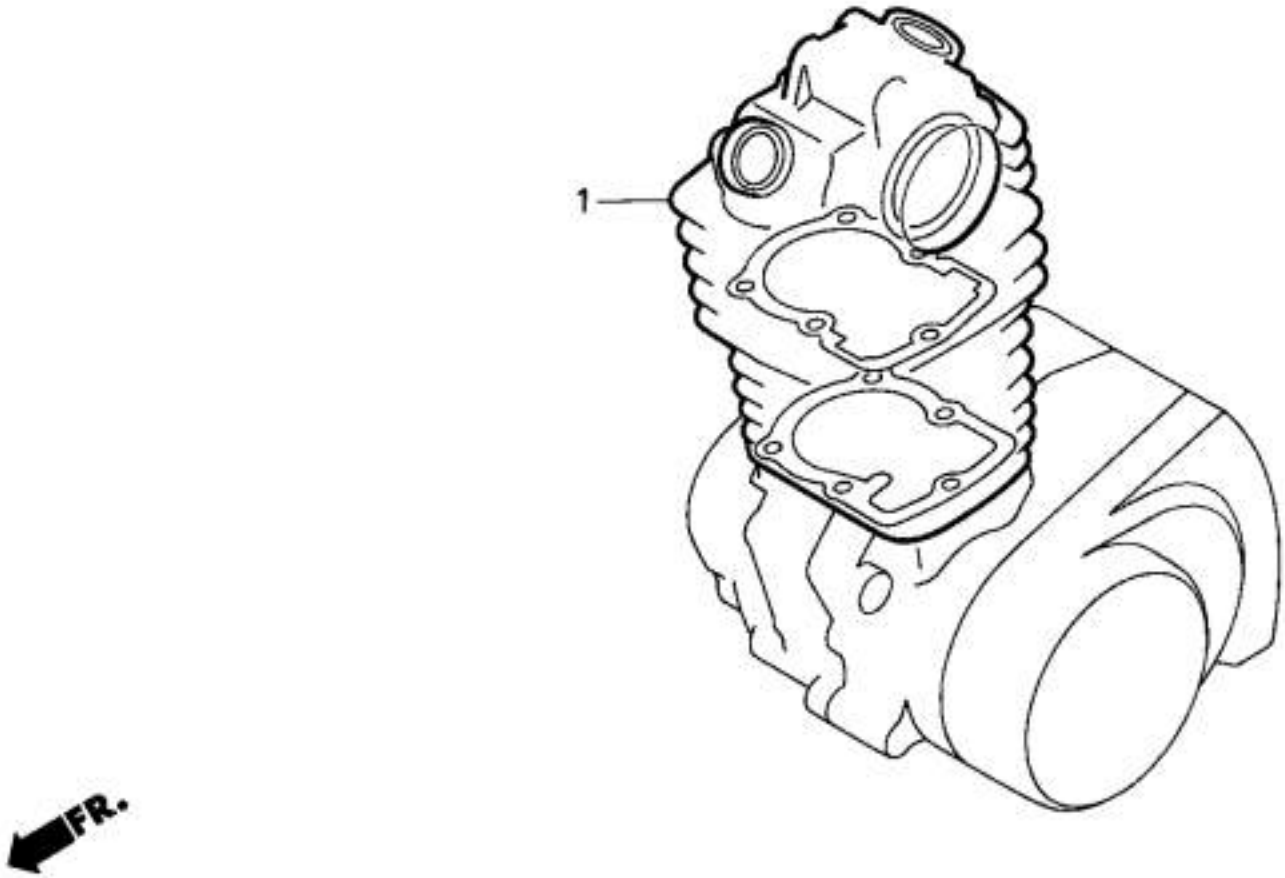

ENG1– X0001

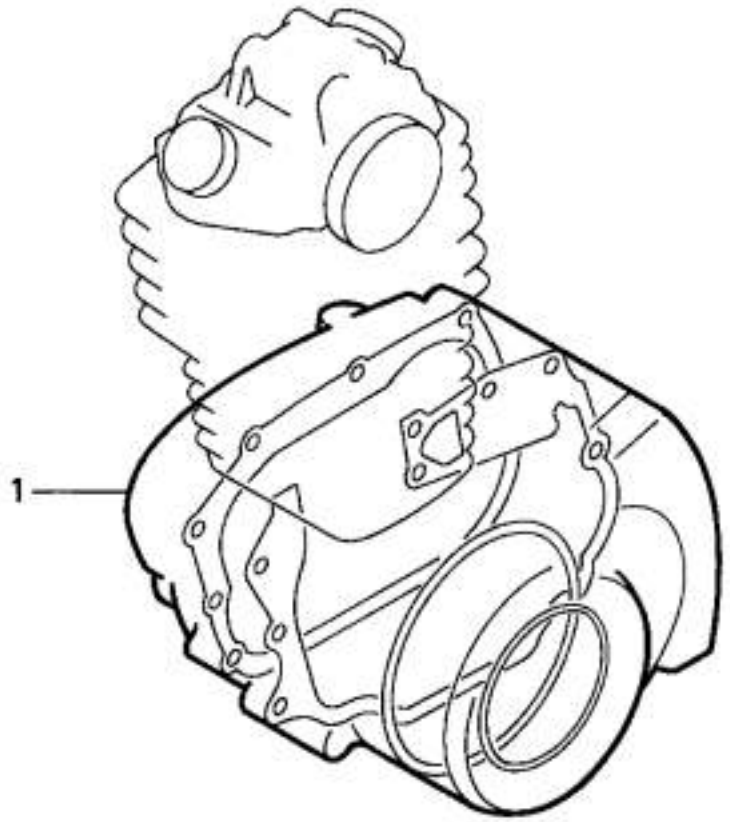

FR.

ENG2– X0001

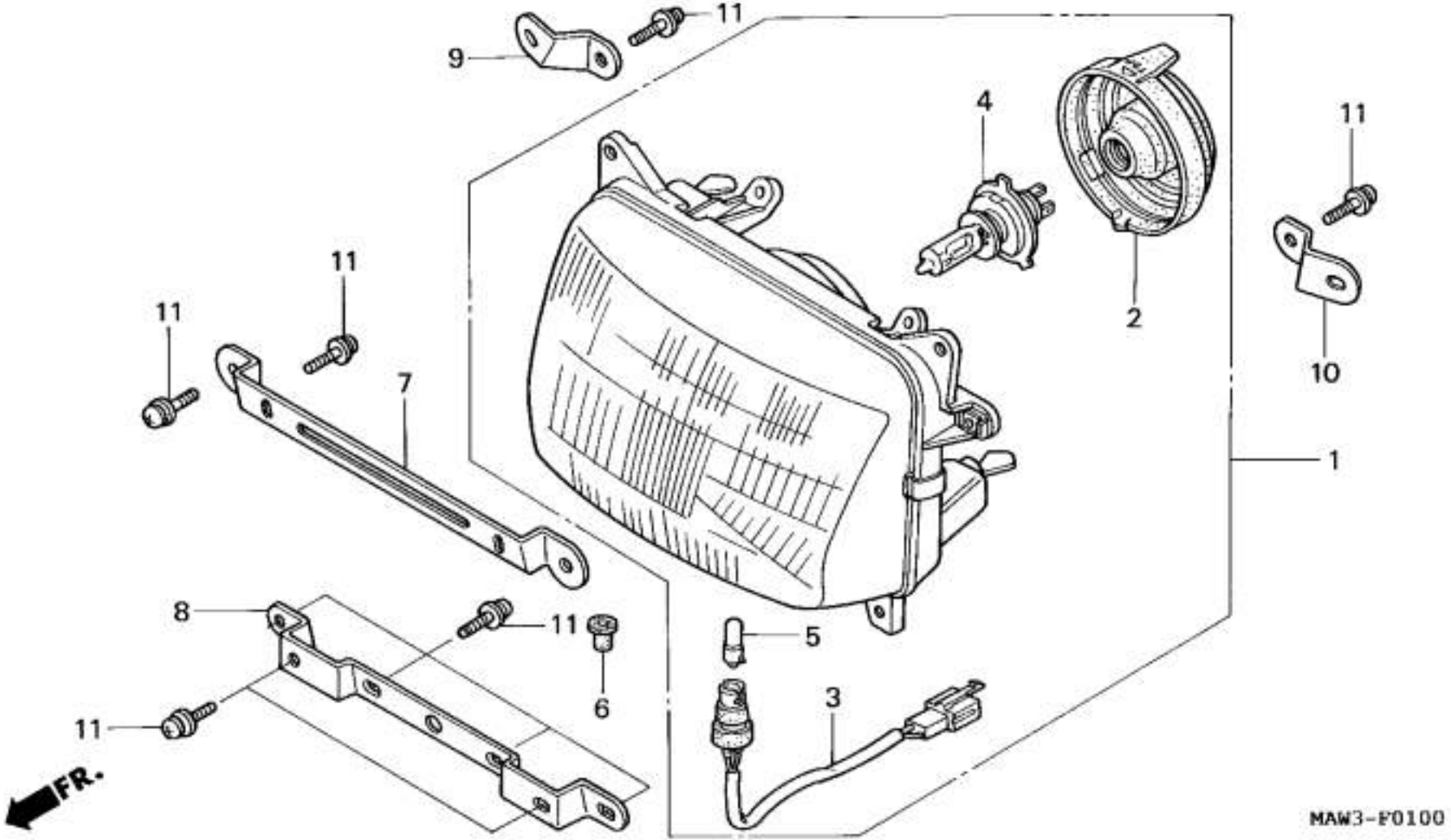
9
11
4
11
2
11
10
11
11
7
1
8
11
6
5
11
3
FR.
MAW3-F0100

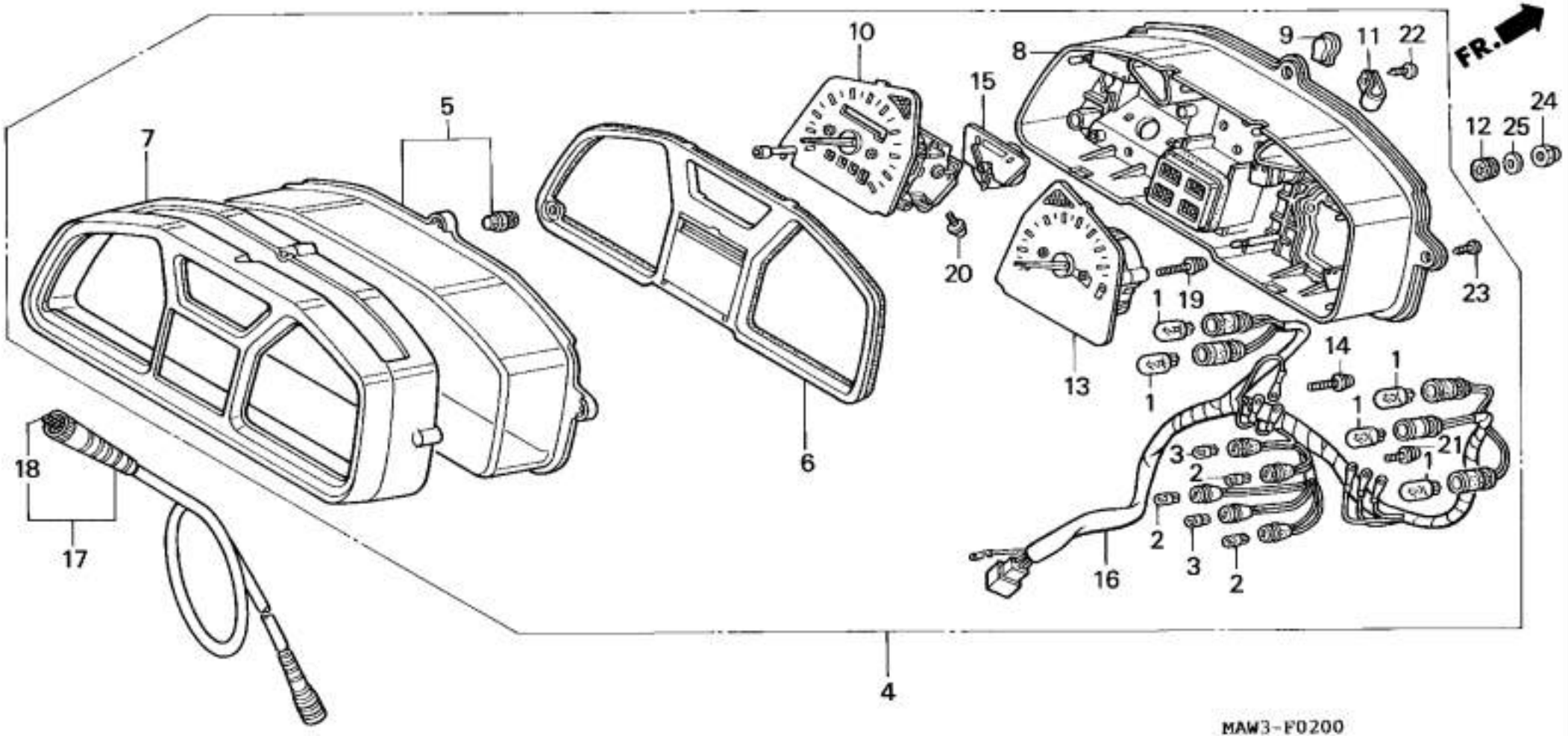
FR.
1
2
3
4
5
6
7
8
9
10
11
12
13
14
15
16
17
18
19
20
21
22
23
24
25
MAW3-F0200

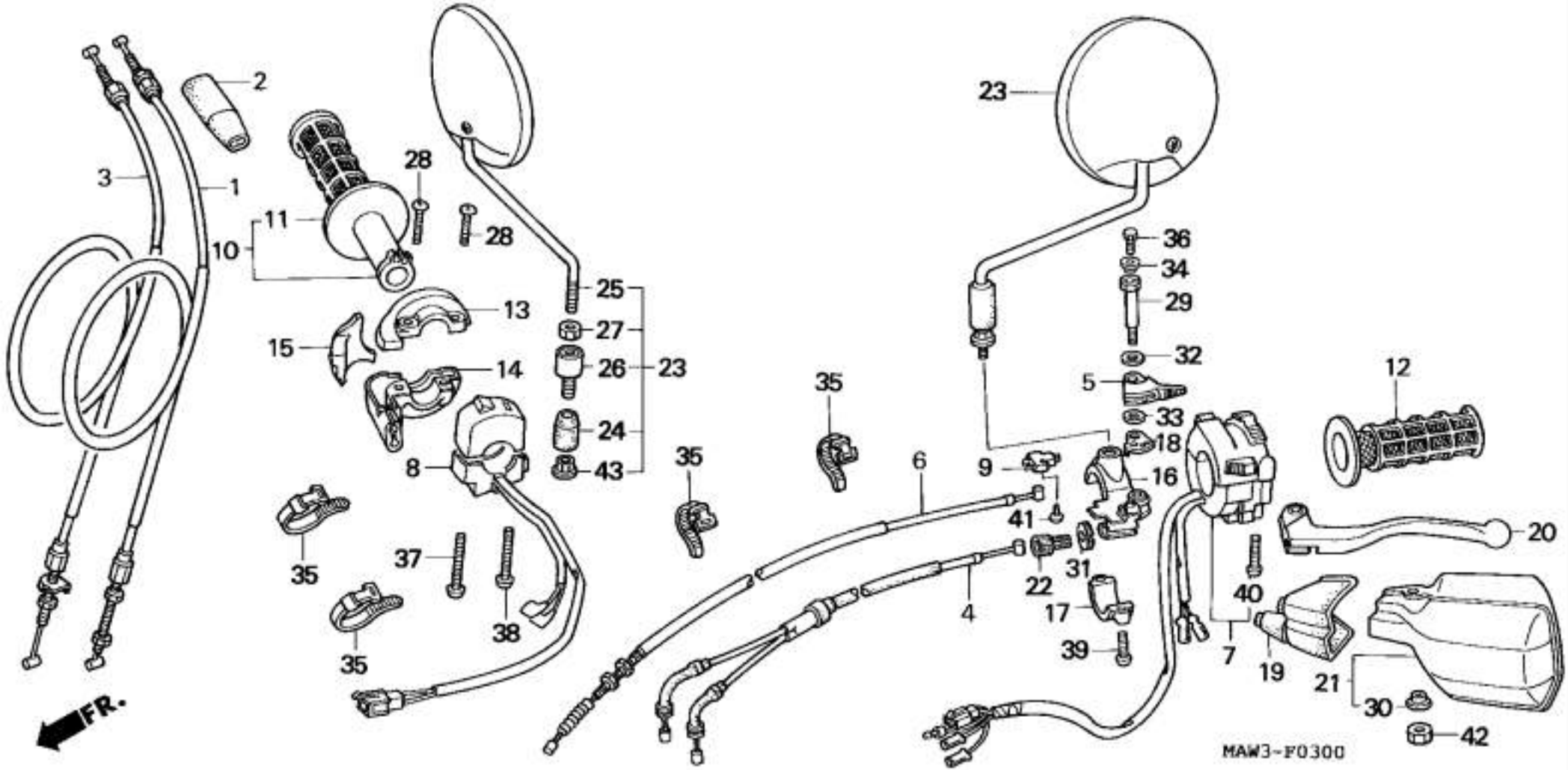
FR.
MAW3-F0300

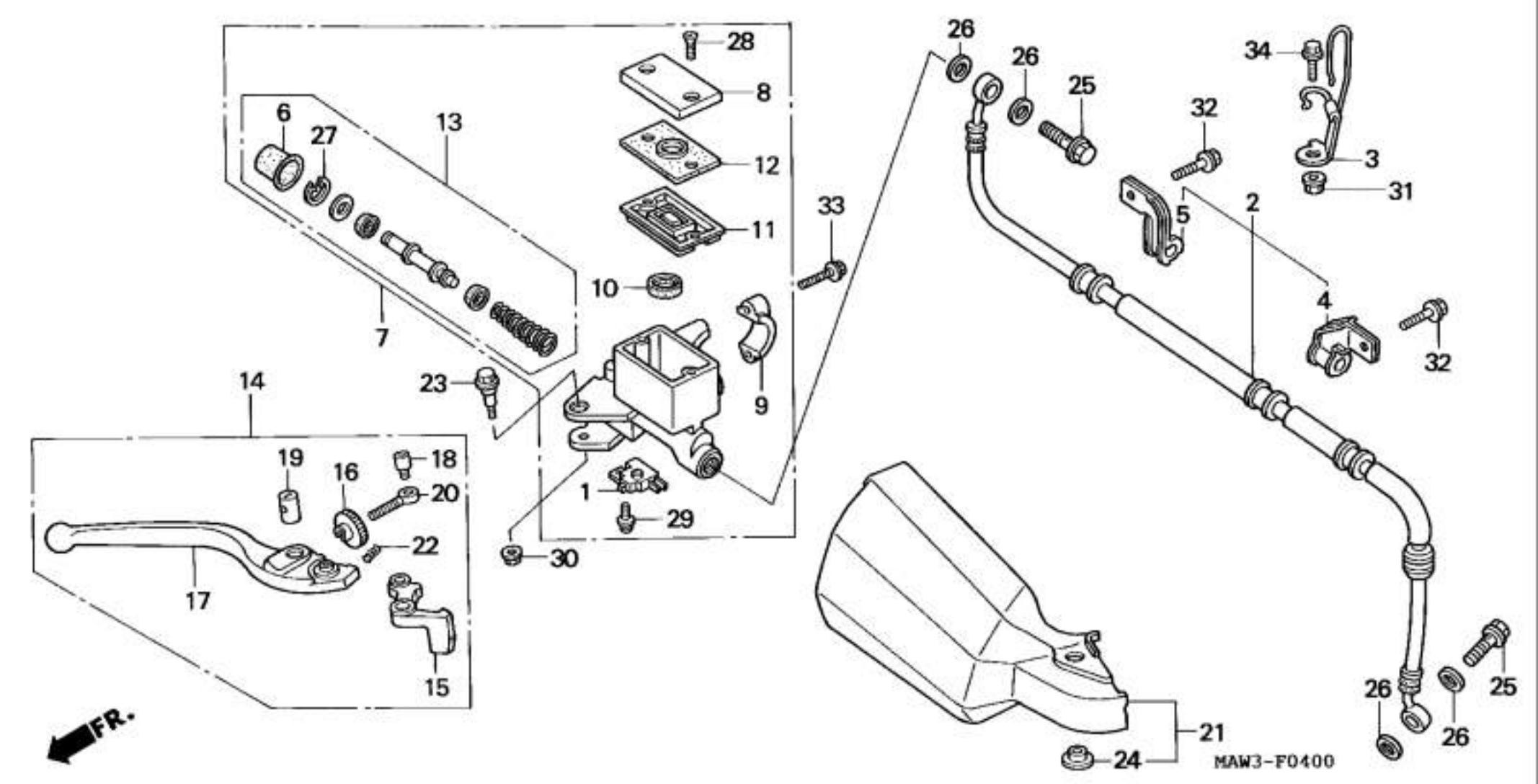

28
8
12
11
10
9
6
27
13
7
23
14
19
16
18
20
22
17
15
1
29
30
33
26
26
25
32
34
3
31
5
2
4
32
26
25
26
21
24
FR.
MAW3-F0400

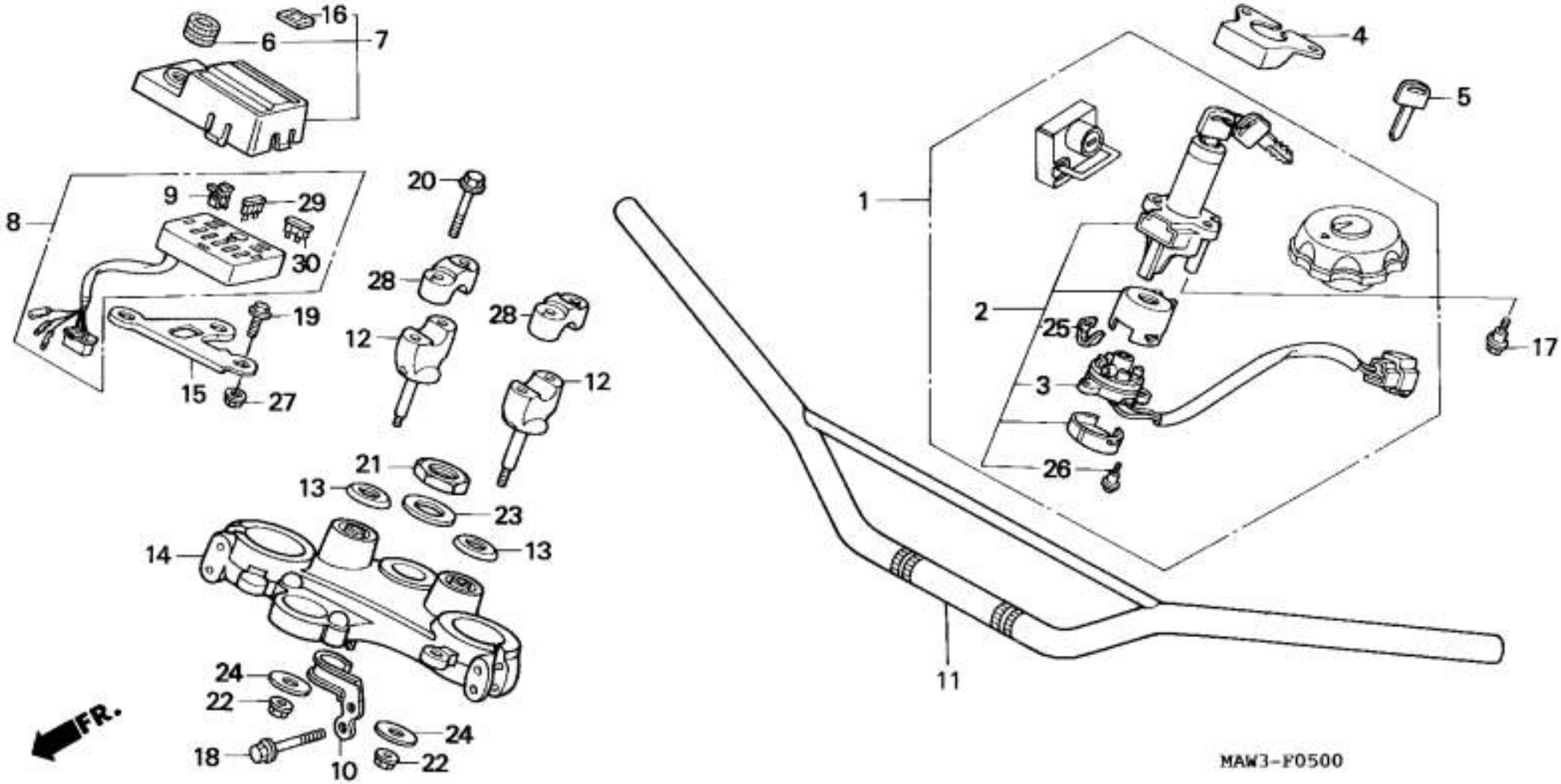
16
6
7
8
9
29
30
20
28
19
12
28
15
27
12
21
13
23
13
14
24
22
18
10
24
22
FR.
1
4
5
2
25
17
3
26
11
MAW3-F0500

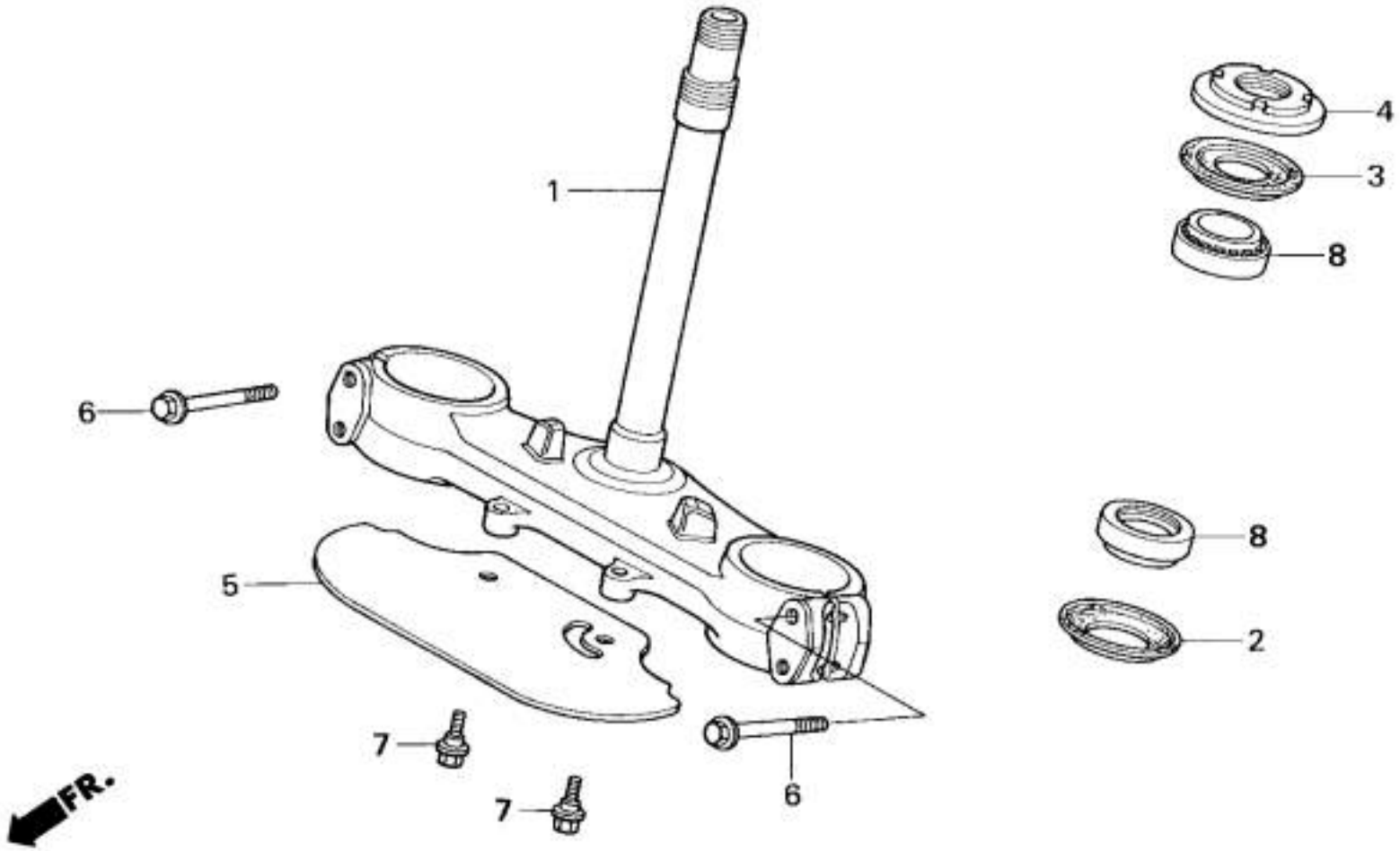

MAW3-F0600

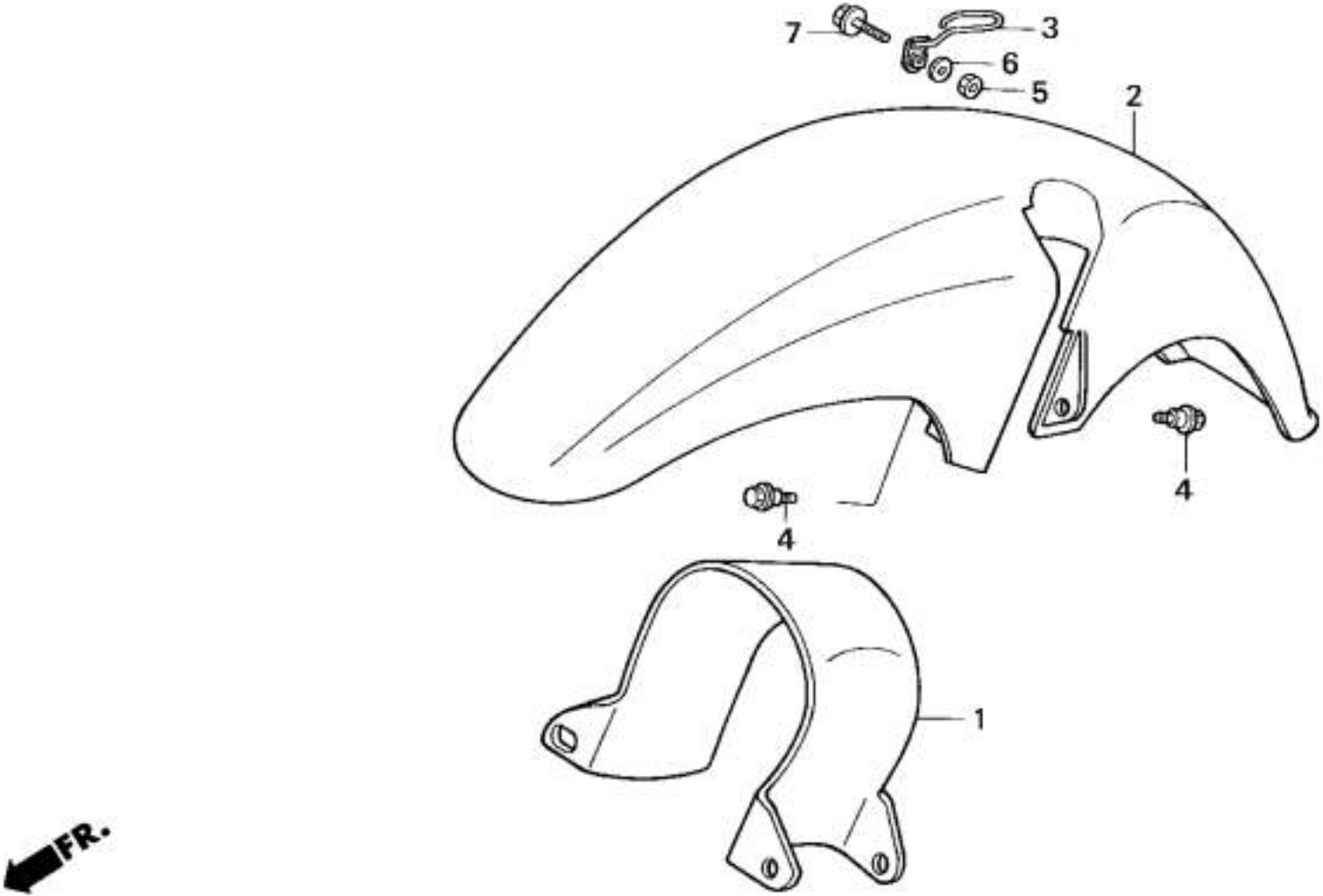
7
3
6
5
2
4
4
1
FR.
MAW3-F0700

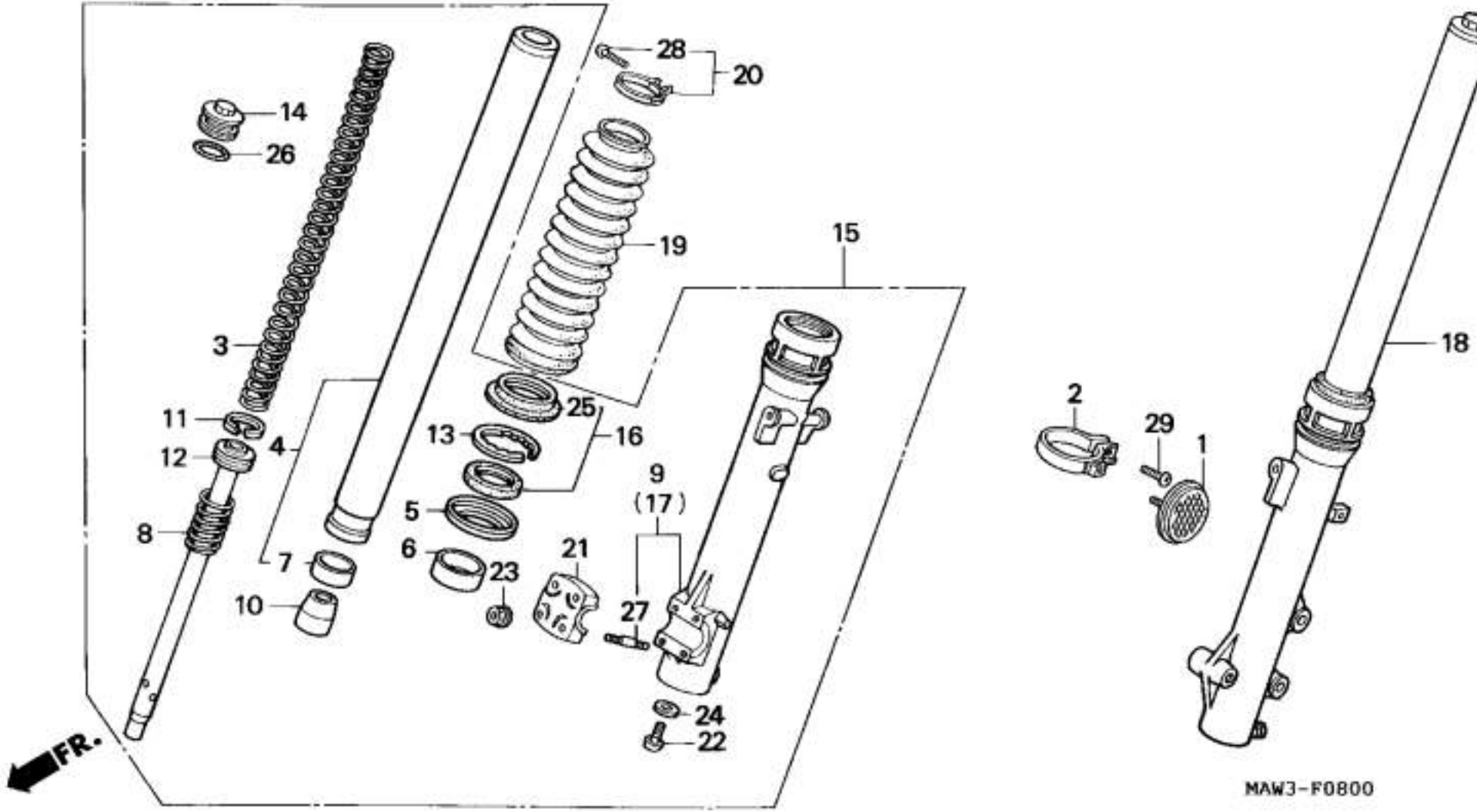
28
20
14
26
19
15
3
25
11
13
16
4
12
5
9
(17)
8
6
21
7
23
27
10
24
22
FR.
2
29
1
18
MAW3-F0800

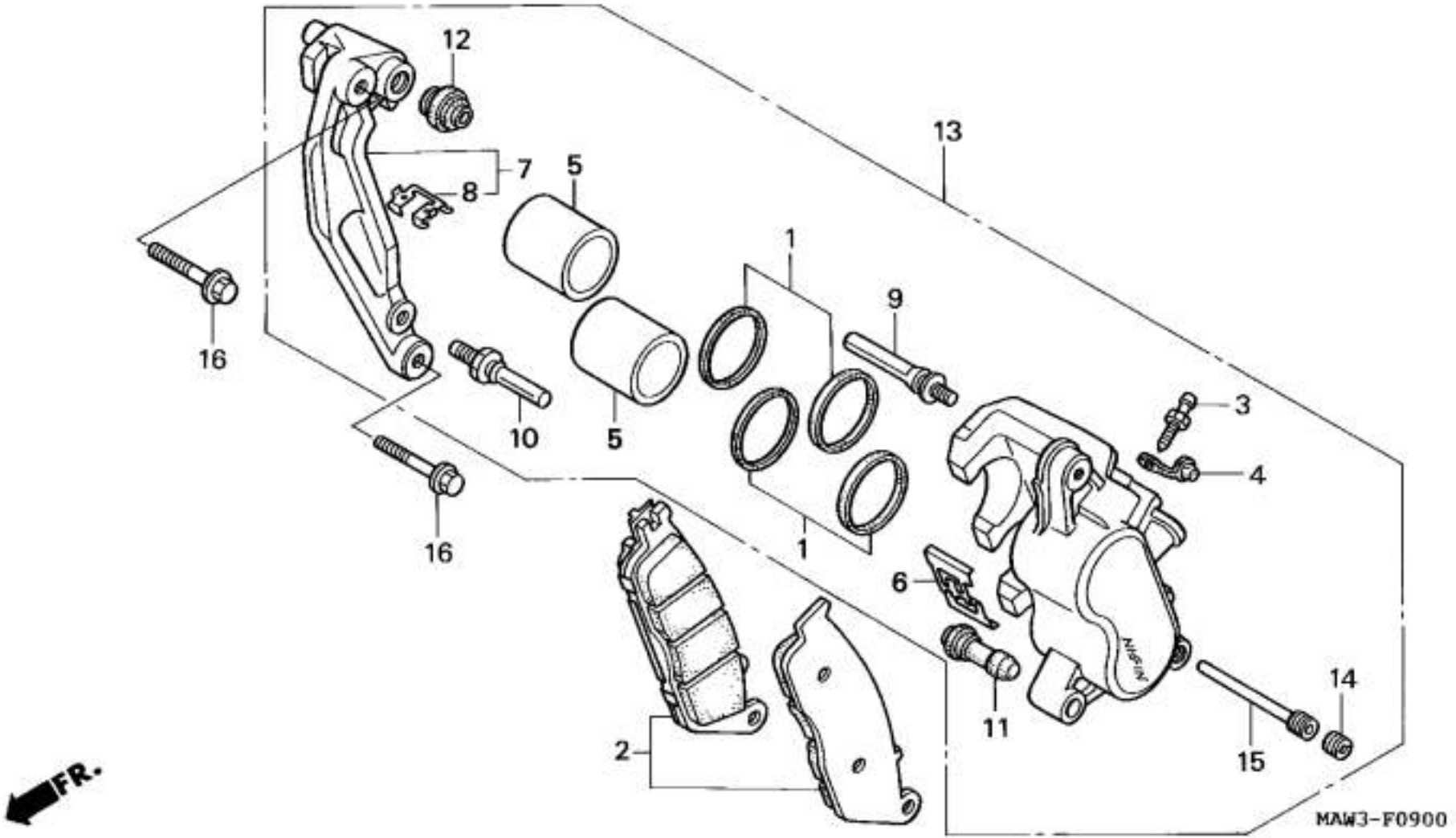
12
13
7
8
5
1
9
16
10
5
3
4
16
1
6
11
14
15
2
FR.
MAW3-F0900

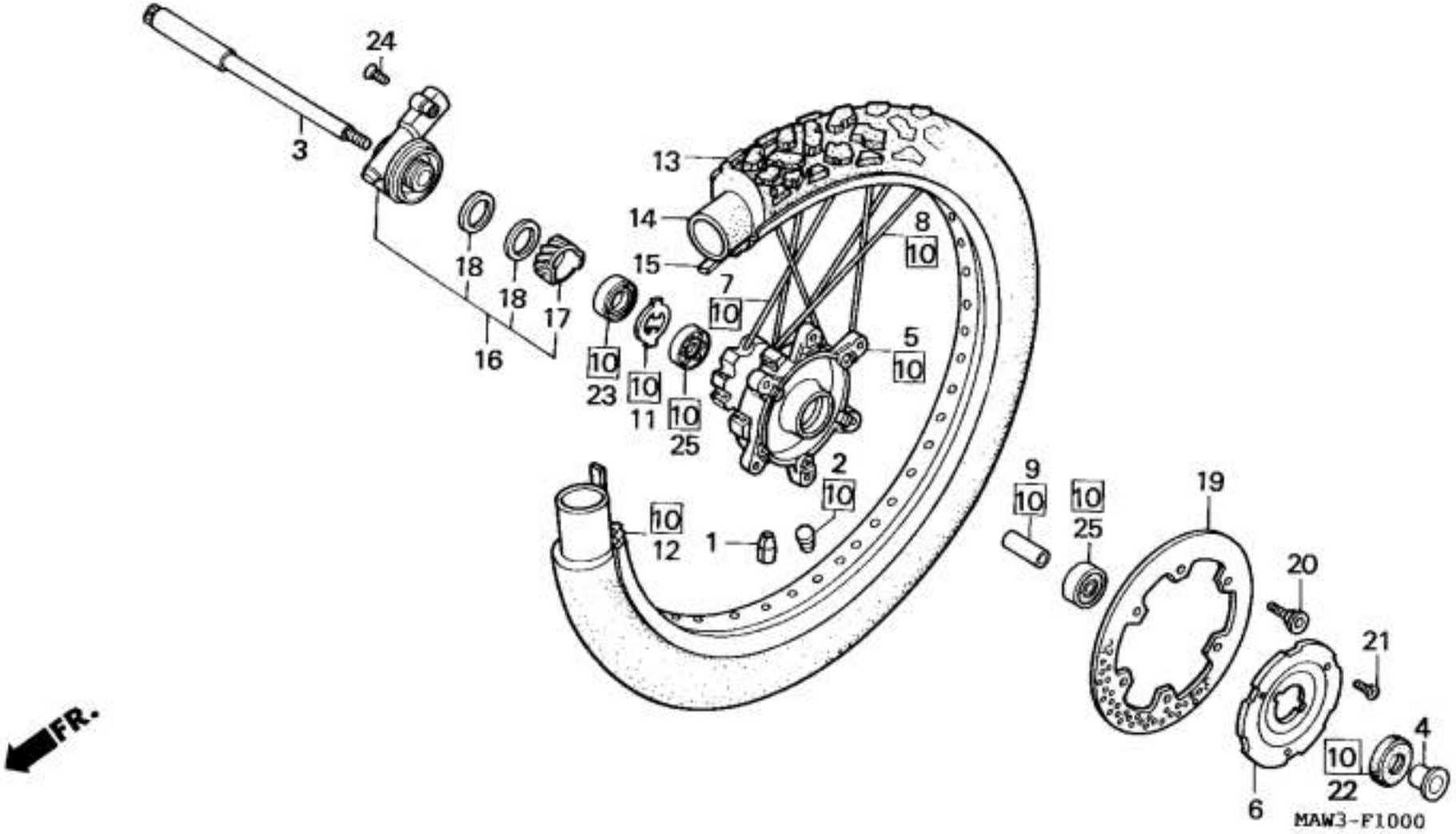
24
3
18
18
17
16
13
14
15
7
10
8
10
5
10
10
23
10
11
10
25
2
10
10
12
1
9
10
10
25
19
20
21
4
10
22
6
MAW3-F1000
FR.

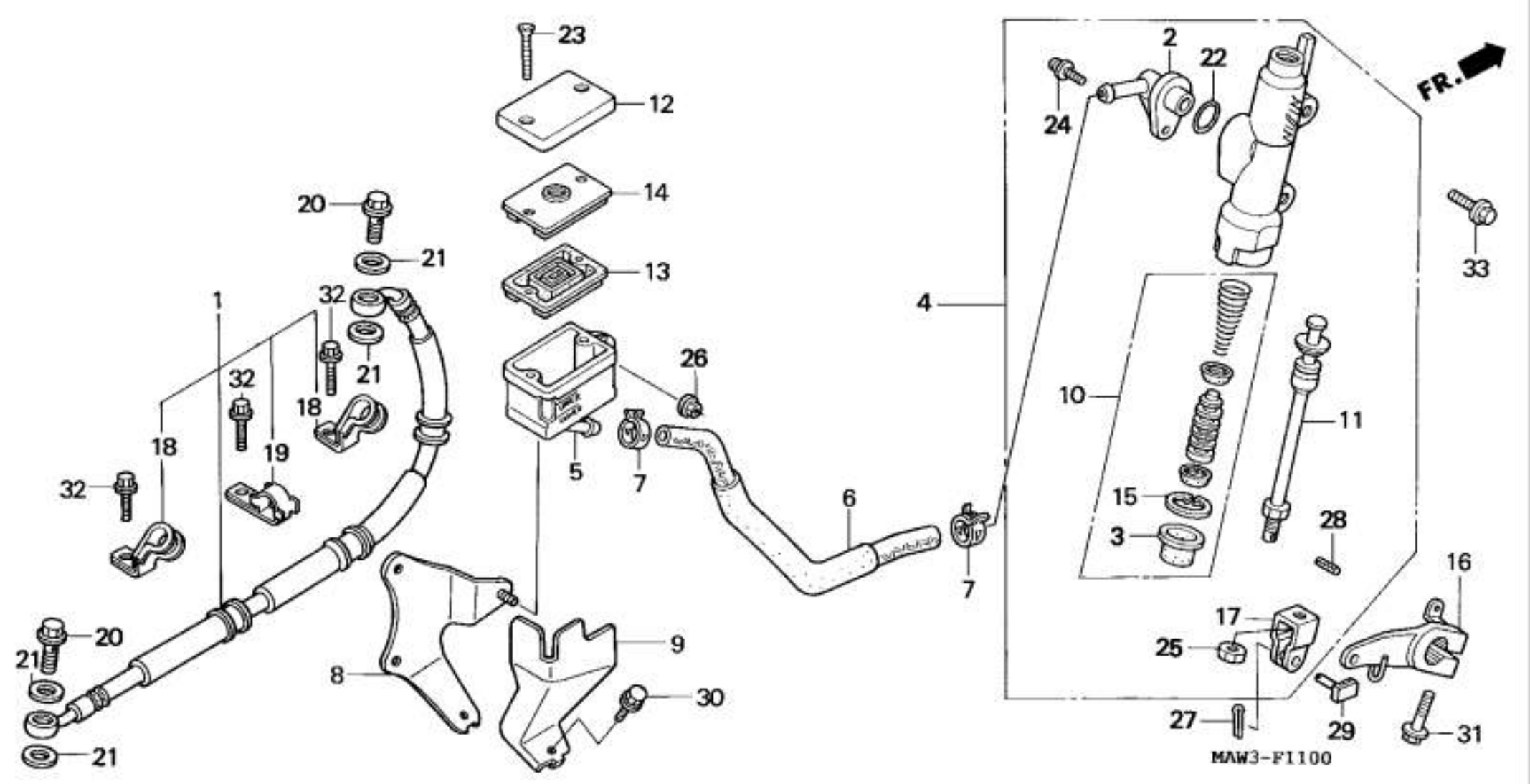
FR.
MAW3-F1100

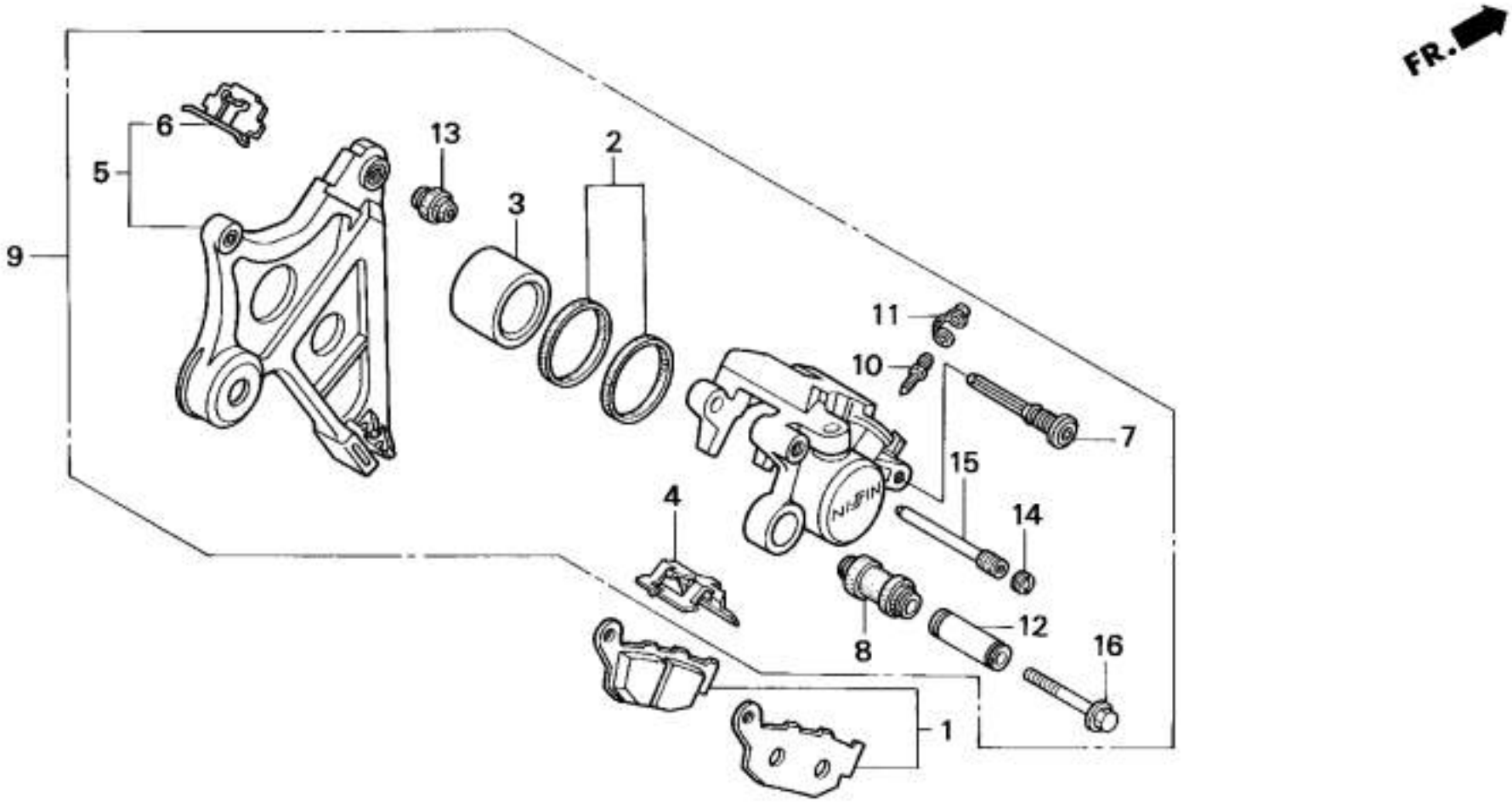
FR.
6
5
9
13
3
2
11
10
7
15
14
4
8
12
16
1
NISSIN
MAW3-F1200

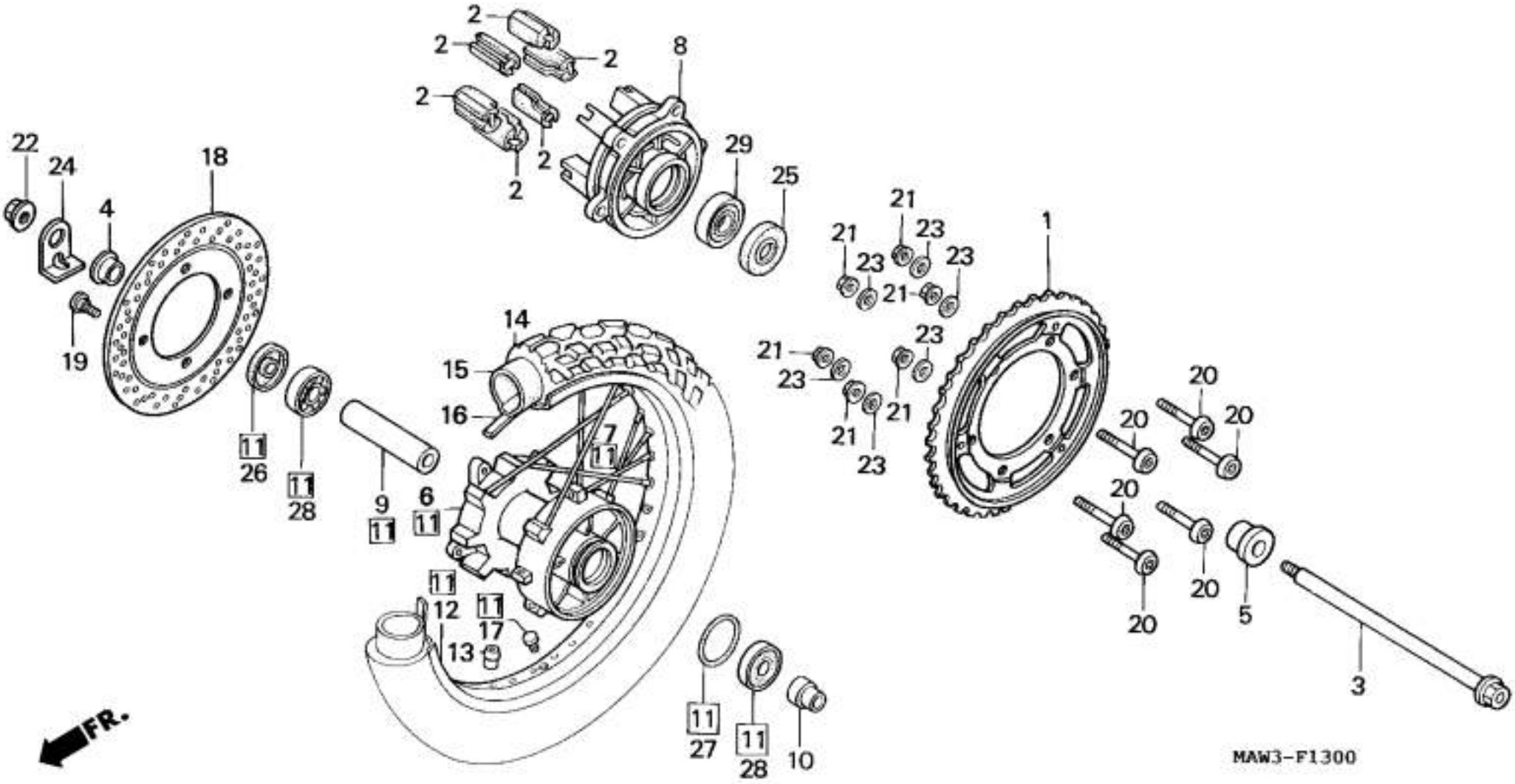
1
2
3
4
5
6
7
8
9
10
11
12
13
14
15
16
17
18
19
20
21
22
23
24
25
26
27
28
29
FR.
MAW3-F1300

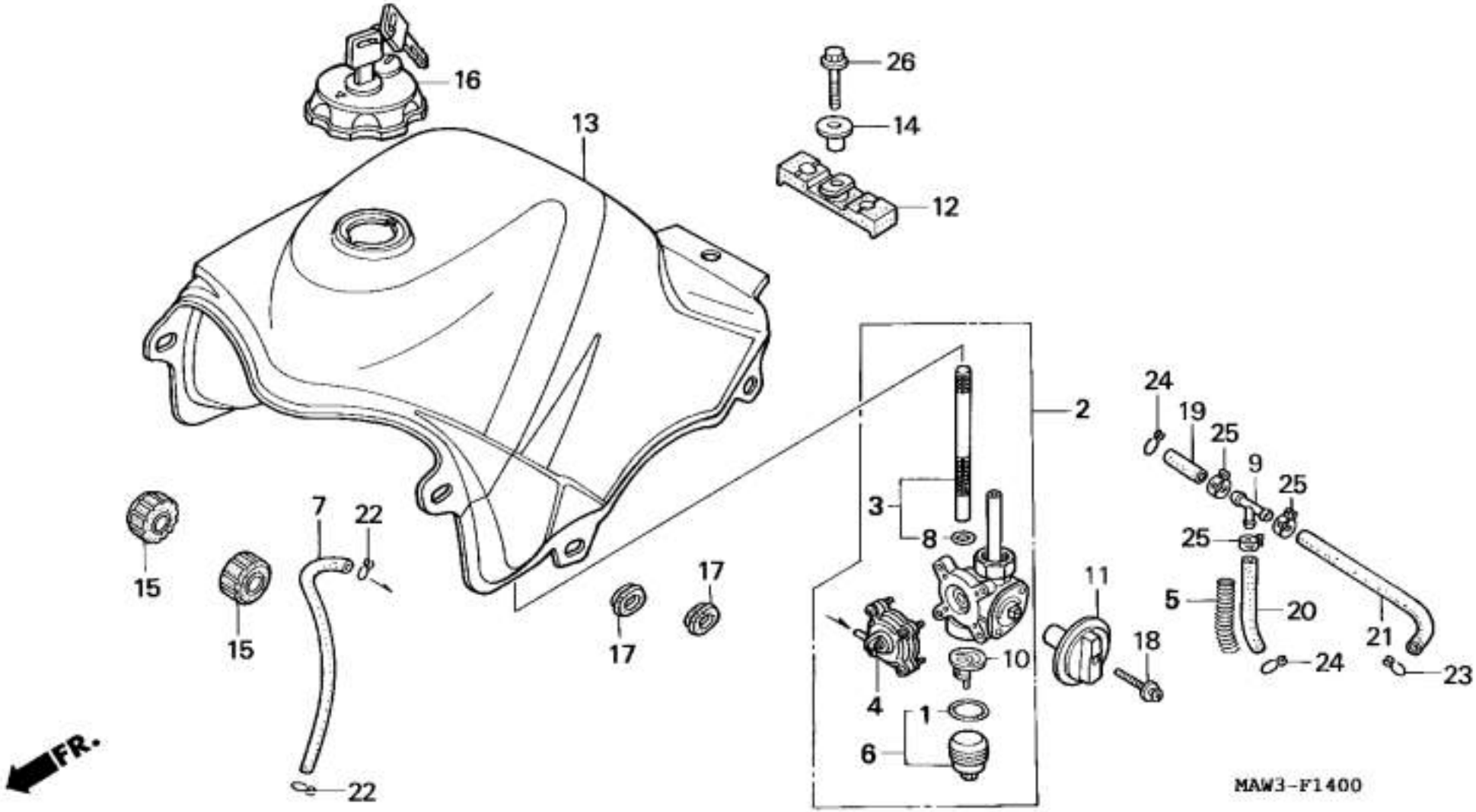
16
13
26
14
12
2
24
19
25
9
25
25
3
8
7
22
15
15
17
17
11
5
20
21
18
10
24
23
4
1
6
22
FR.
MAW3-F1400

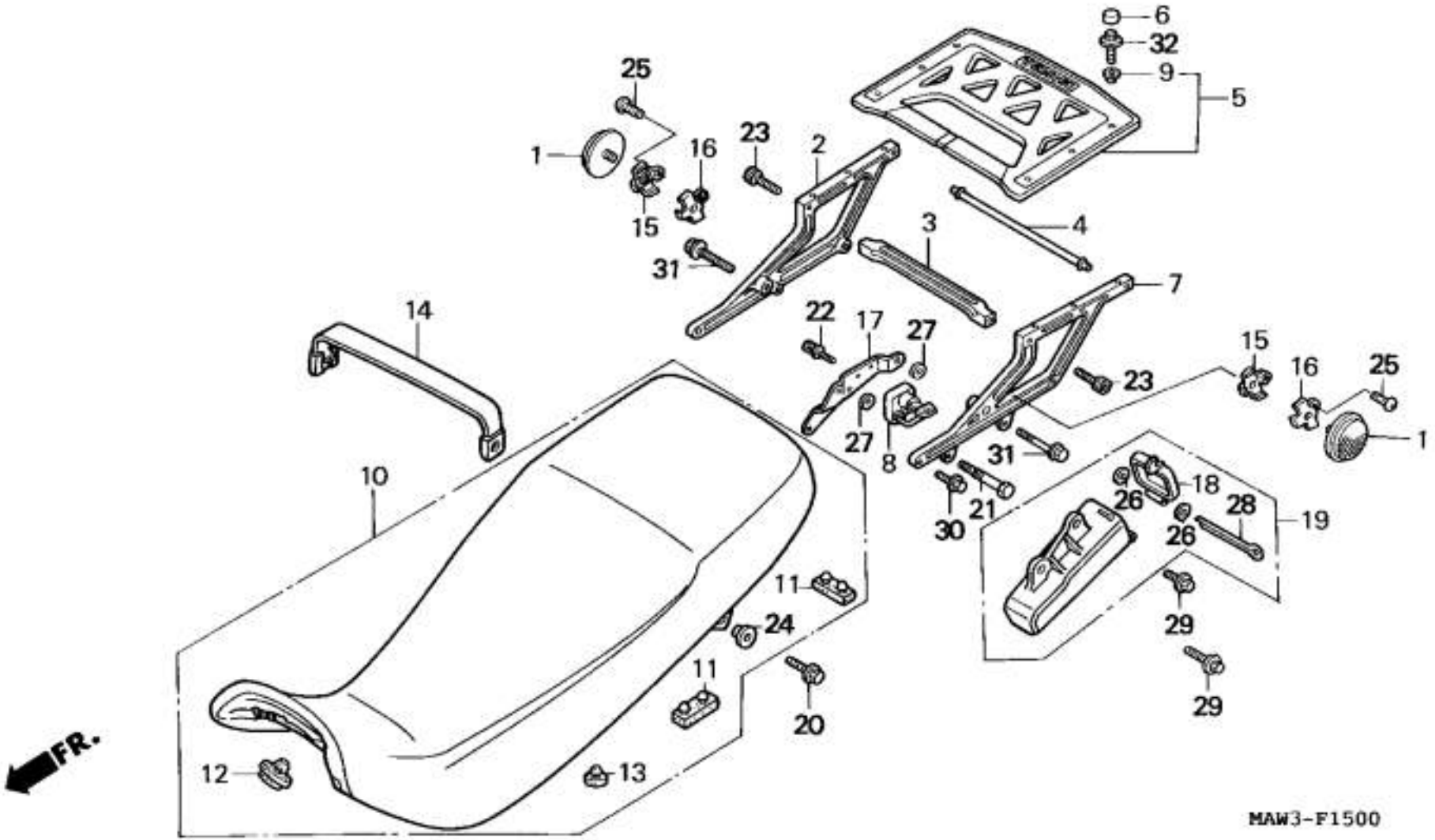
FR.
MAW3-F1500

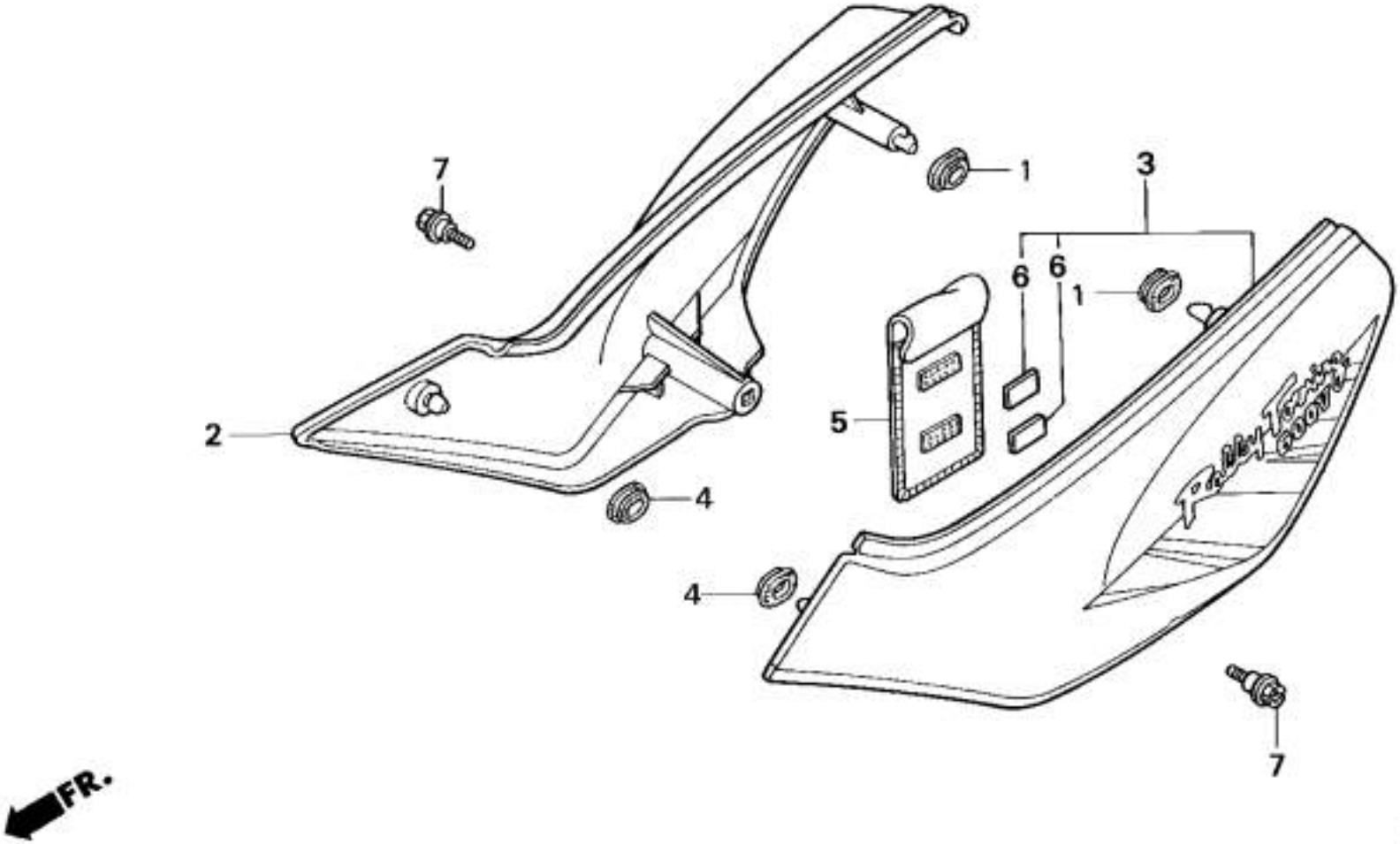
7
1
3
6
6
1
2
5
4
4
7
FR.
MAW3-F1600

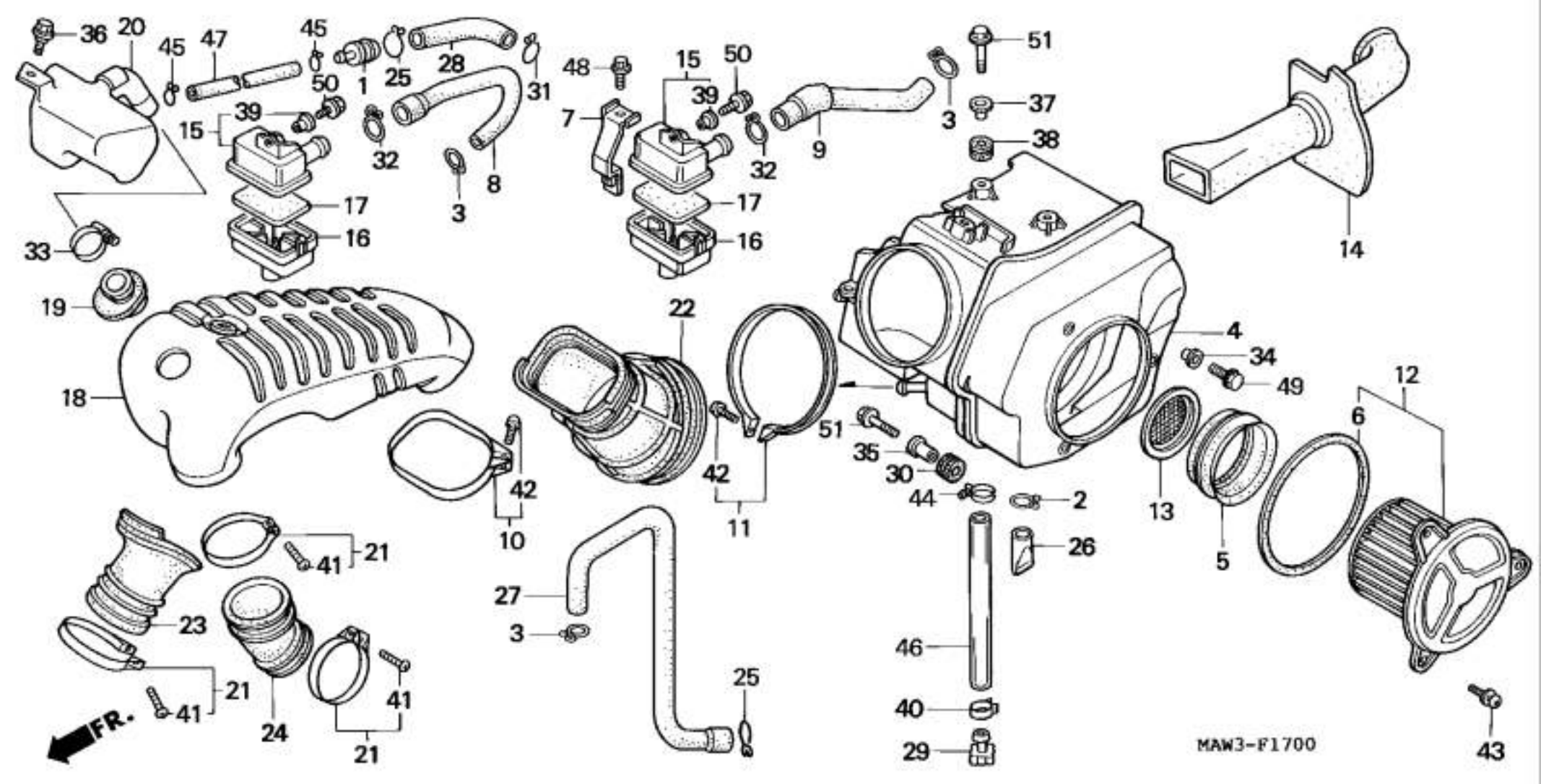
36
20
45
47
45
1
25
28
31
50
39
15
32
8
3
17
16
33
19
18
48
15
50
39
7
32
9
3
51
37
38
17
16
14
22
4
34
49
12
6
51
35
30
44
2
13
5
42
42
10
11
26
41
21
27
3
23
46
25
21
41
24
41
21
40
29
43
FR.
MAW3-F1700

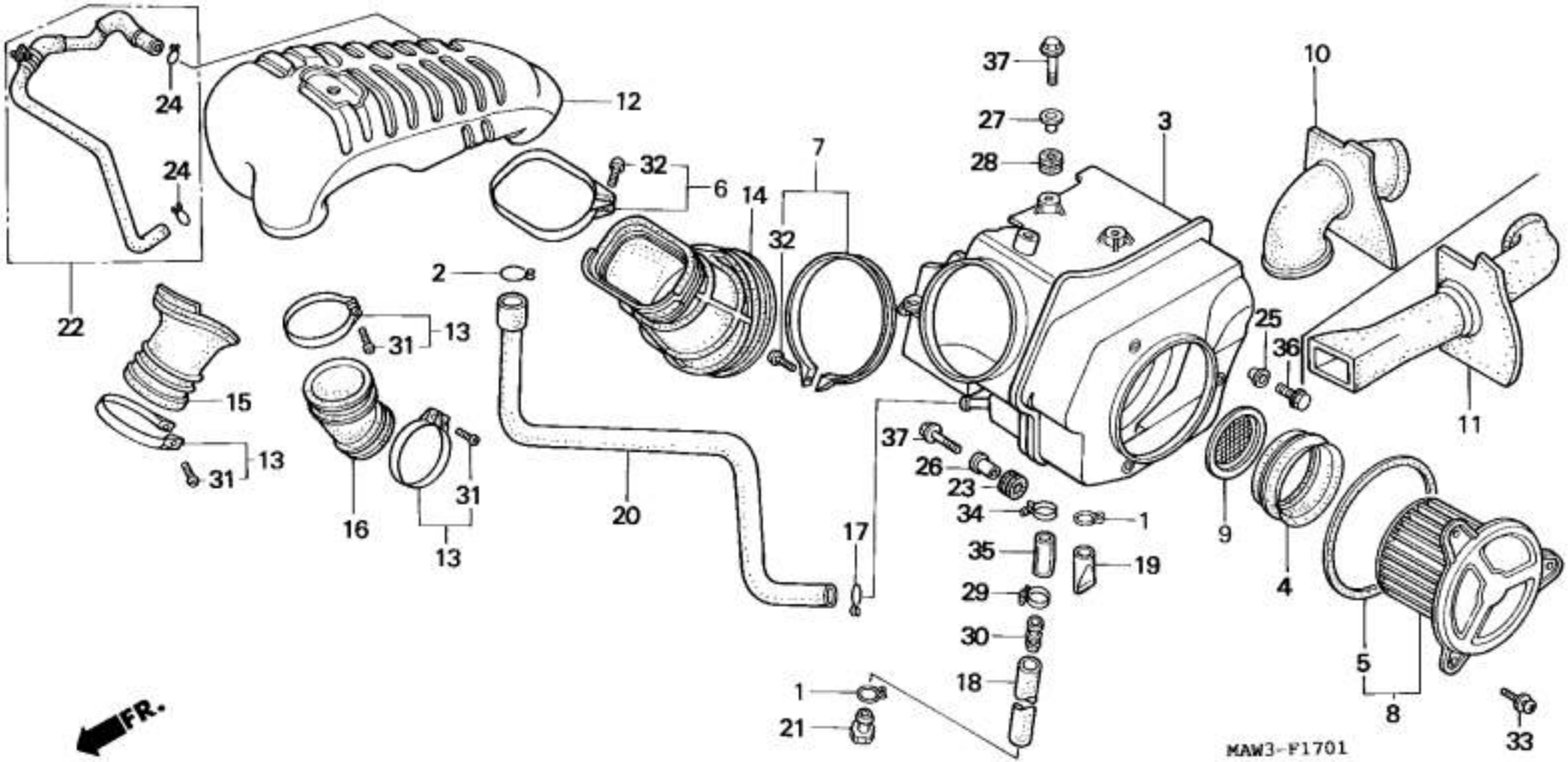

24
24
22
12
32
6
14
7
32
2
13
31
15
13
31
16
31
13
20
17
37
27
28
3
10
25
36
11
37
26
23
34
1
35
19
29
30
18
1
21
9
4
5
8
33
FR.
MAW3-F1701

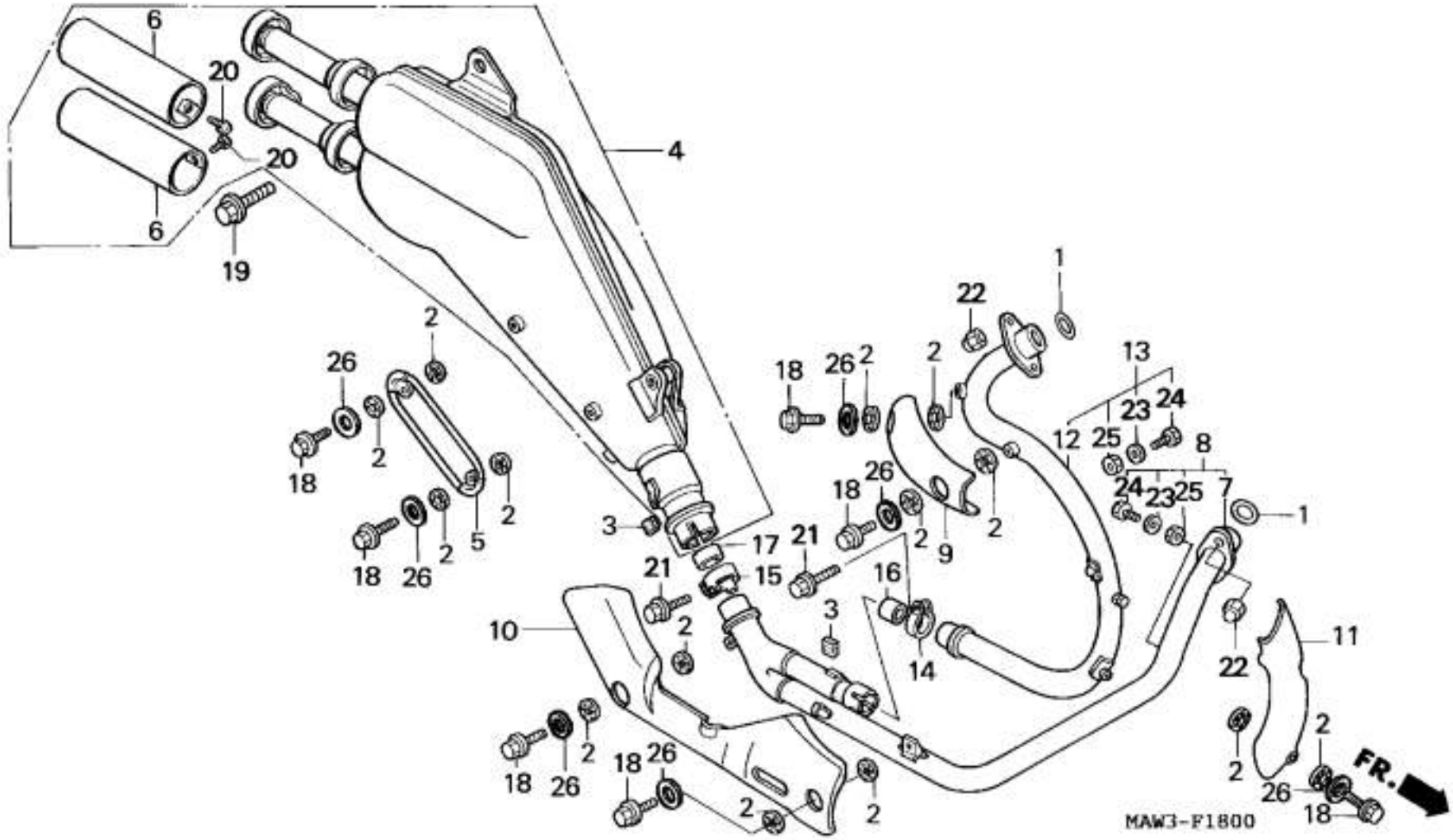

6
20
20
6
19
4
1
22
2
26
18
2
5
2
18
26
2
3
17
21
15
21
2
10
18
26
2
18
26
2
2
18
26
2
2
9
2
13
12
25
23
24
8
24
23
25
7
1
16
3
14
22
11
2
2
26
18
FR.
MAW3-F1800

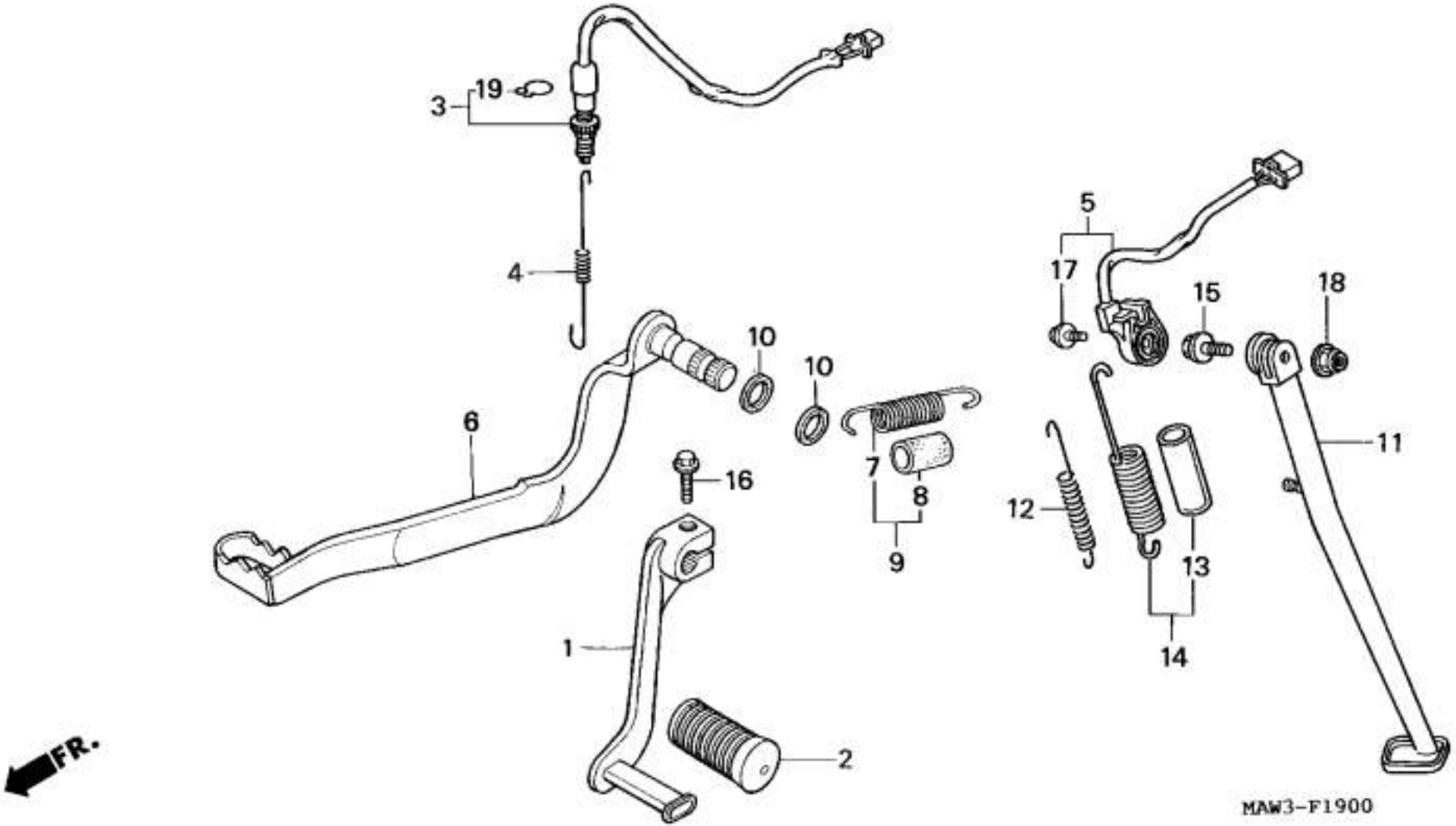
3
19
4
10
10
6
16
7
8
9
1
2
5
17
15
18
12
13
11
14
FR.
MAW3-F1900

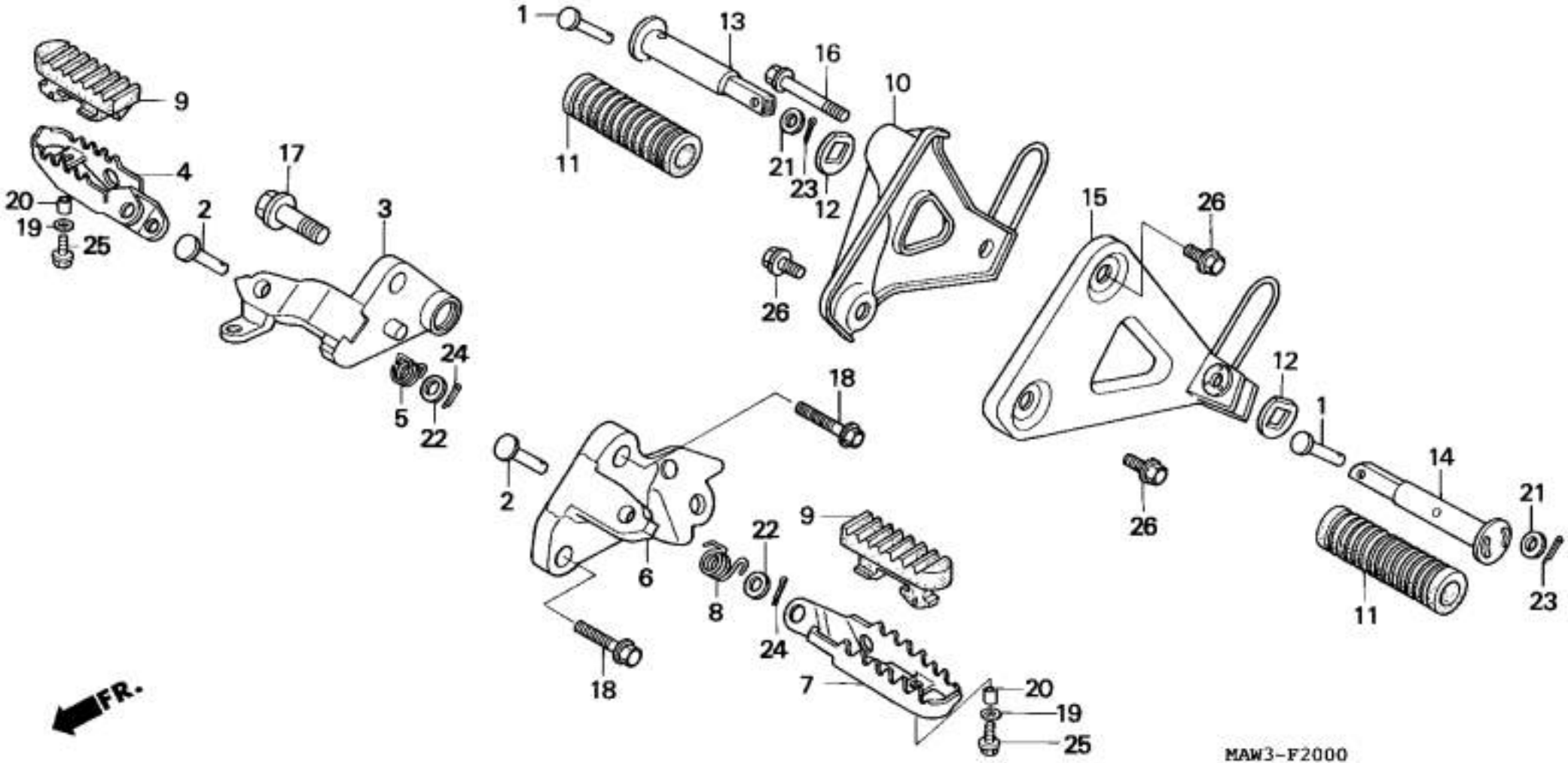

1
13
16
10
9
4
17
11
21
23
12
20
19
25
2
3
15
26
26
24
5
22
18
12
1
14
2
21
9
22
6
8
24
26
11
23
18
7
20
19
25
FR.
MAW3-F2000

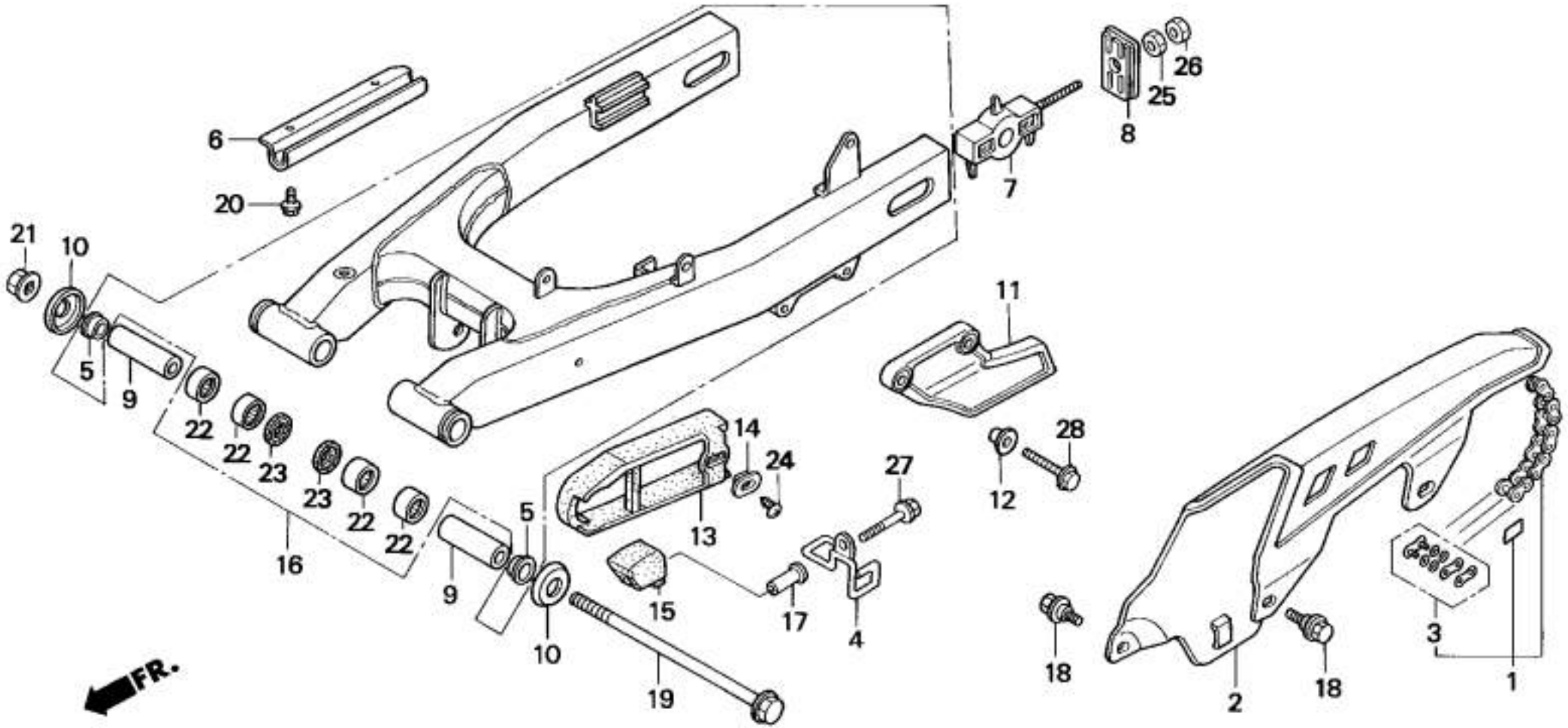

6
20
21
10
5
9
22
22
23
23
22
22
16
9
5
10
19
14
24
13
15
17
4
27
11
12
28
7
8
25
26
18
2
18
3
1
FR.

MAW3-F2100

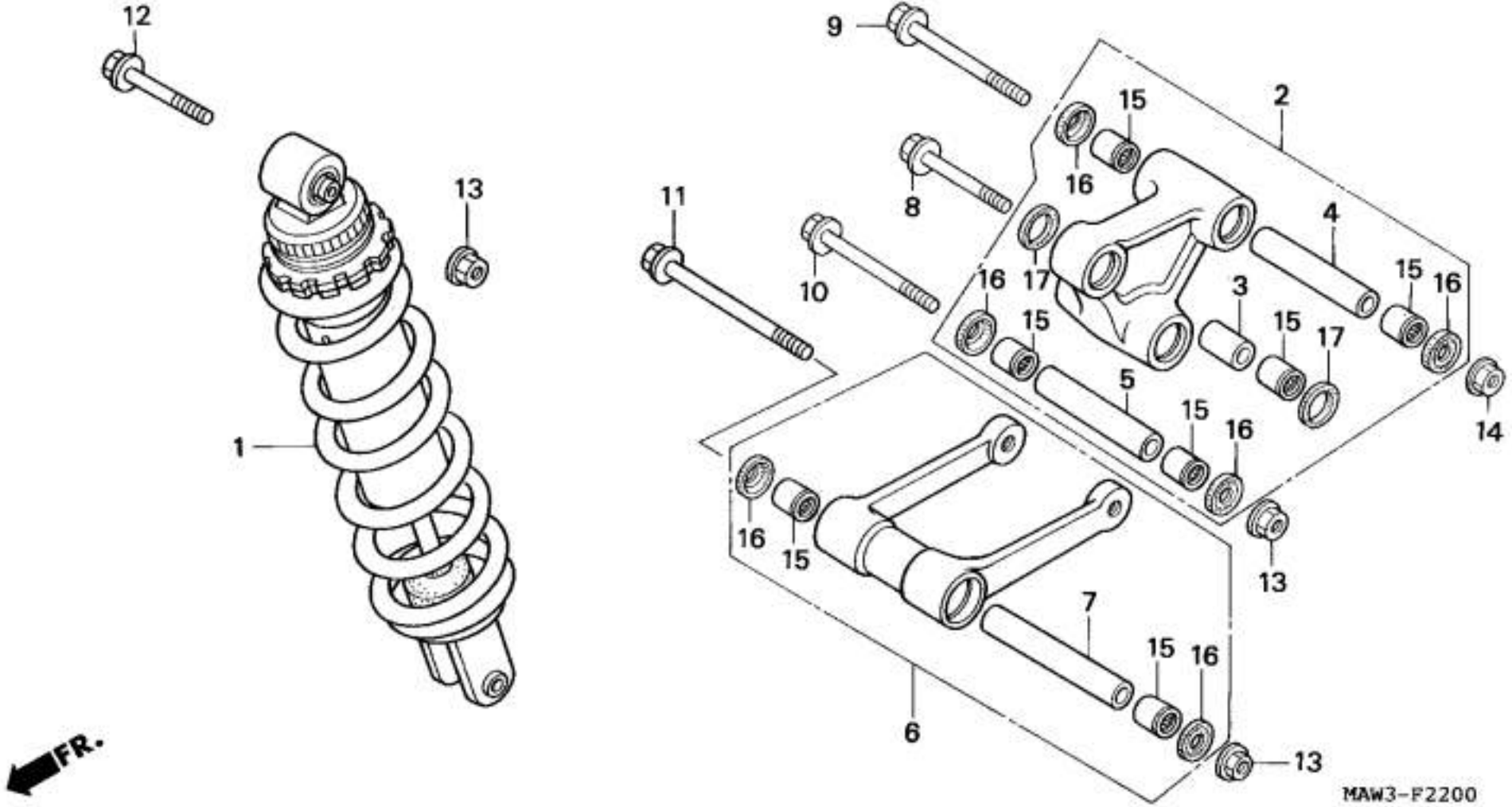

12
9
2
15
16
13
11
8
4
10
16
17
3
15
16
15
15
17
5
15
16
14
1
16
15
13
7
15
16
6
13
FR.
MAW3-F2200

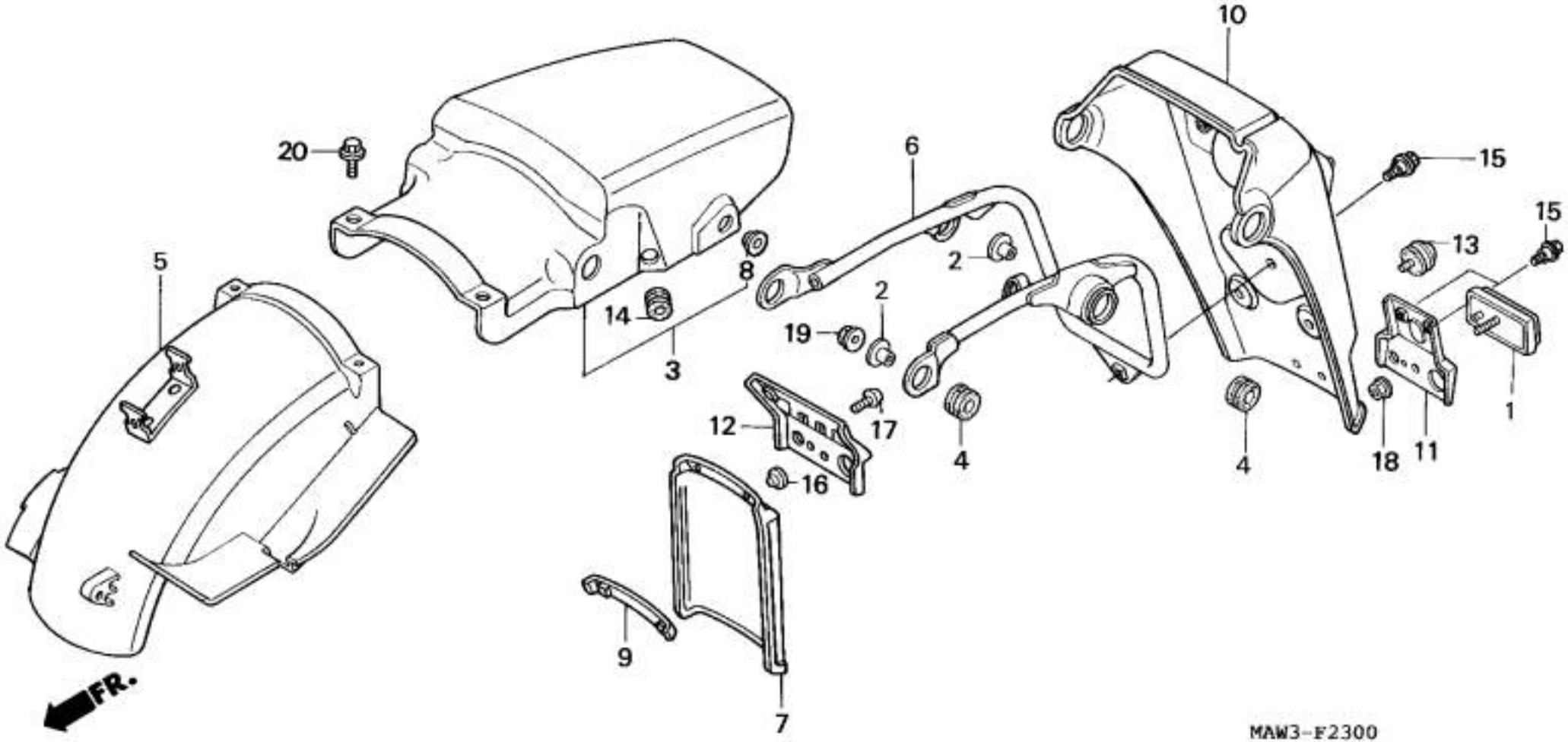

10
20
6
15
15
13
5
8
2
2
14
19
3
12
17
4
4
18
11
1
16
9
7
FR.
MAW3-F2300

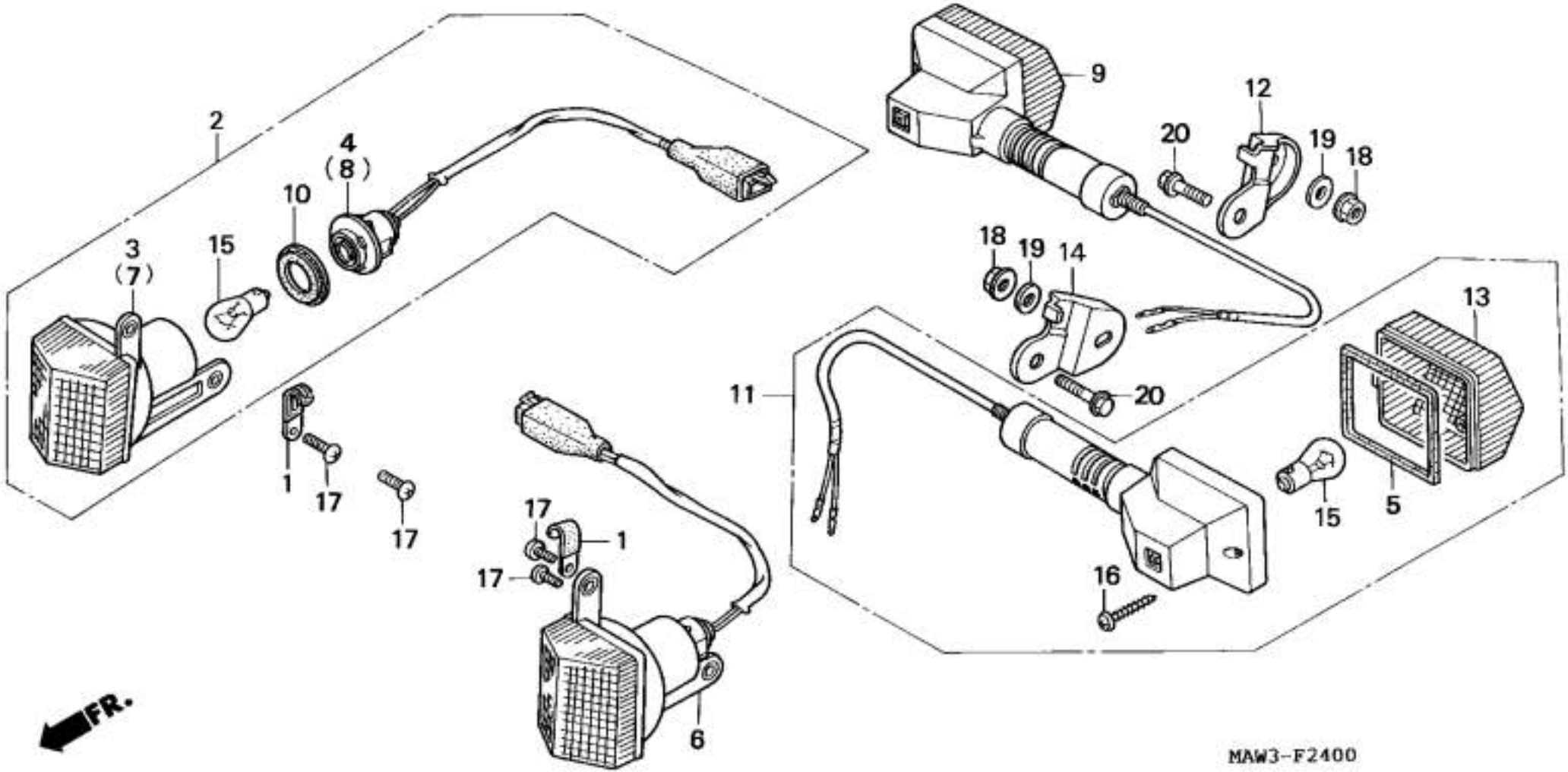
2
3
(7)
15
10
4
(8)
1
17
17
17
17
1
6
9
12
20
19
18
18
19
14
20
11
13
5
15
16
FR.
MAW3-F2400

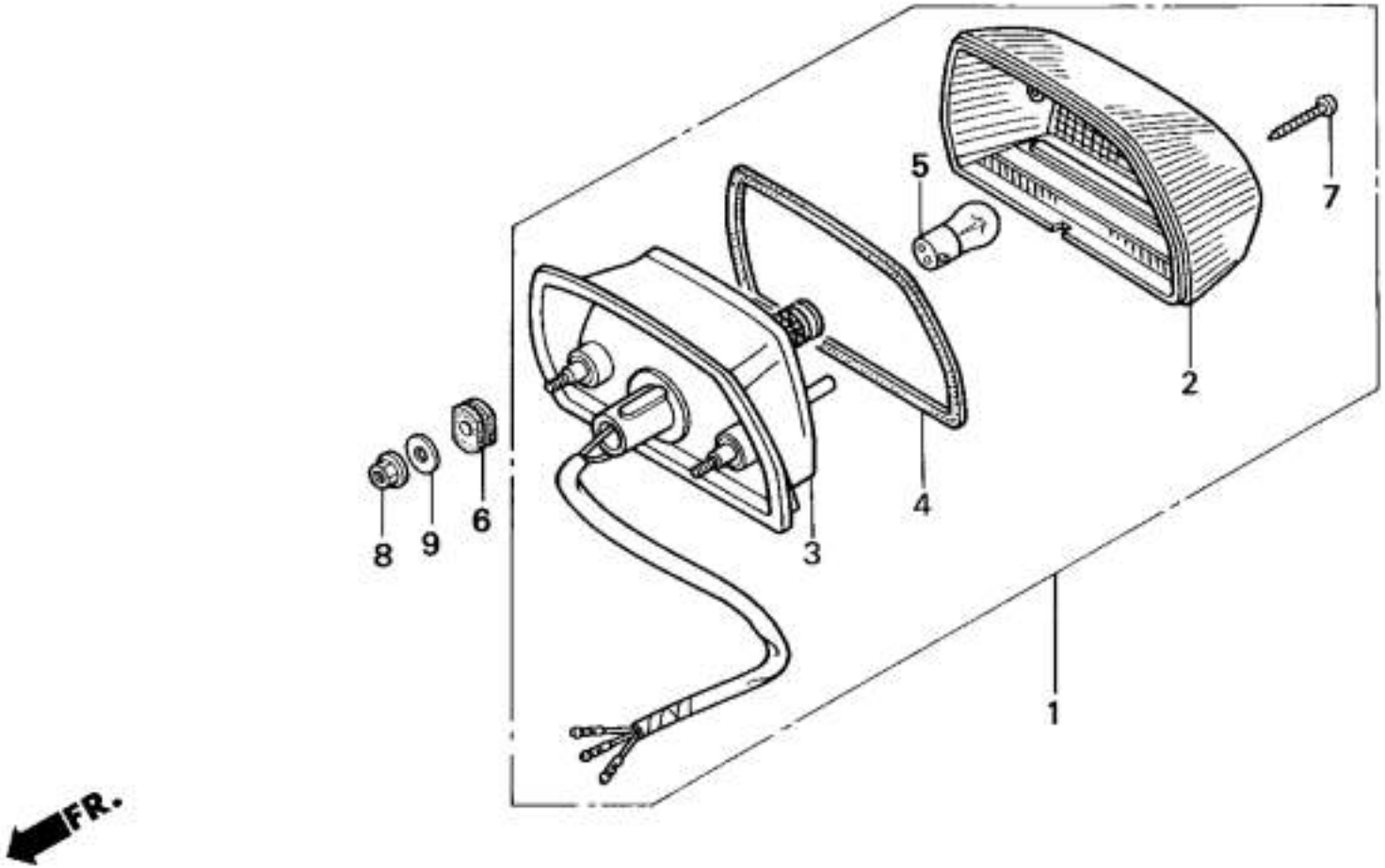

MAW3-F2500

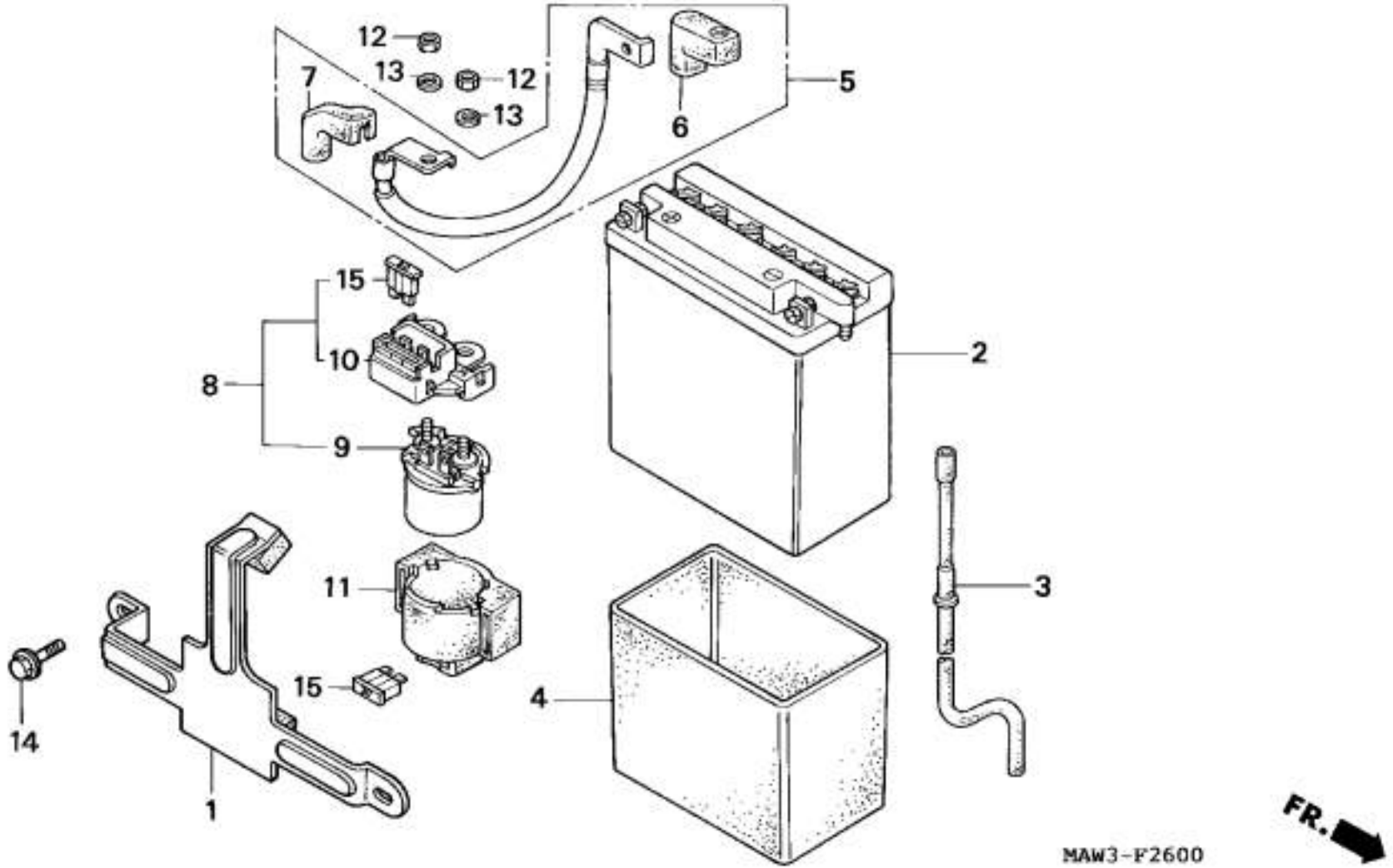
12
13
12
13
7
5
6
15
10
8
9
2
11
3
15
4
14
1
FR.
MAW3-F2600

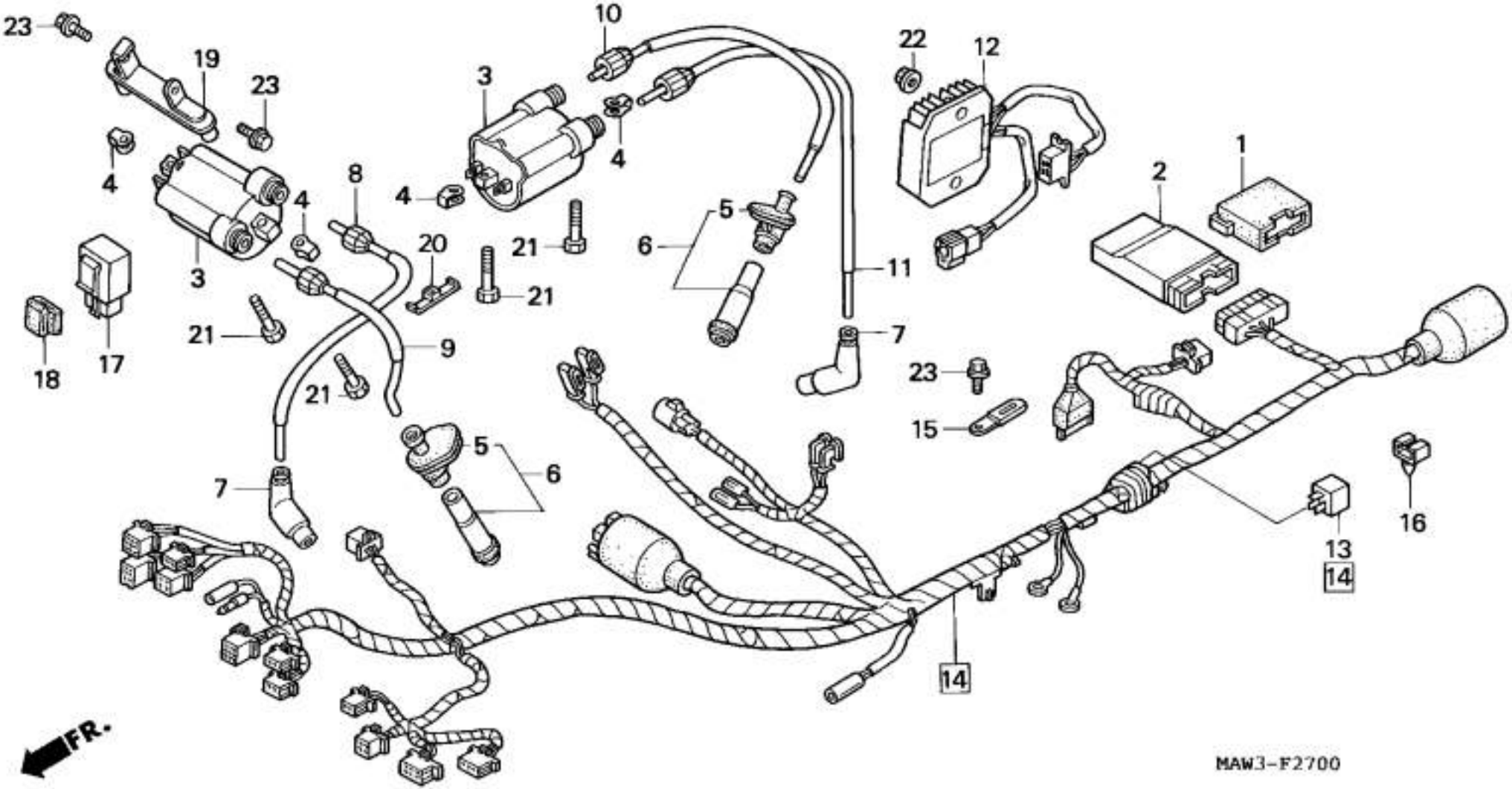

23
19
23
4
3
4
8
4
3
20
21
21
21
21
18
17
9
10
3
4
5
6
11
7
22
12
2
1
23
15
5
6
7
16
13
14
14
FR.
MAW3-F2700

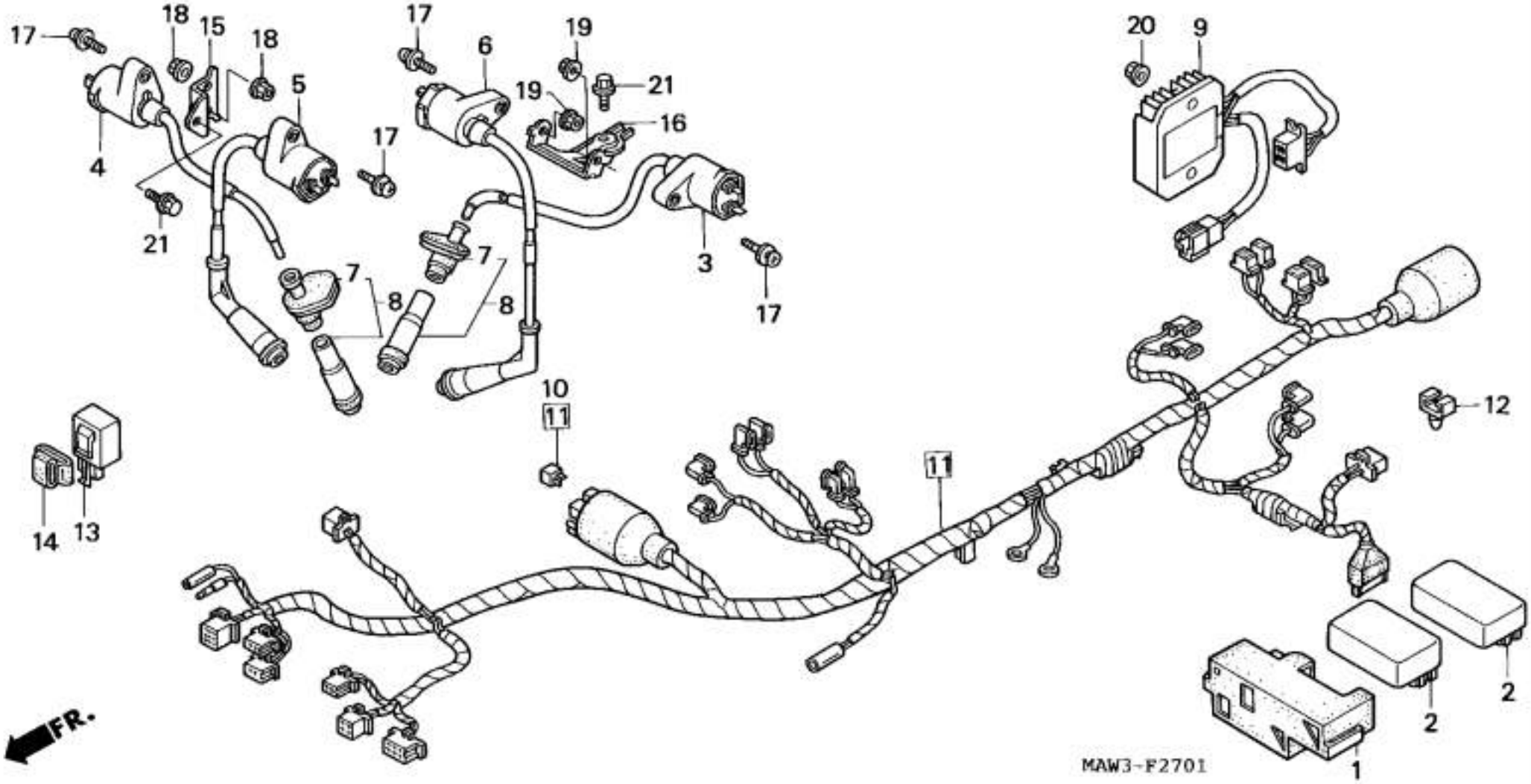
17
18
15
18
5
4
21
17
6
19
19
21
16
17
3
17
7
7
8
8
20
9
10
11
11
12
14
13
2
2
1
FR.
MAW3-F2701

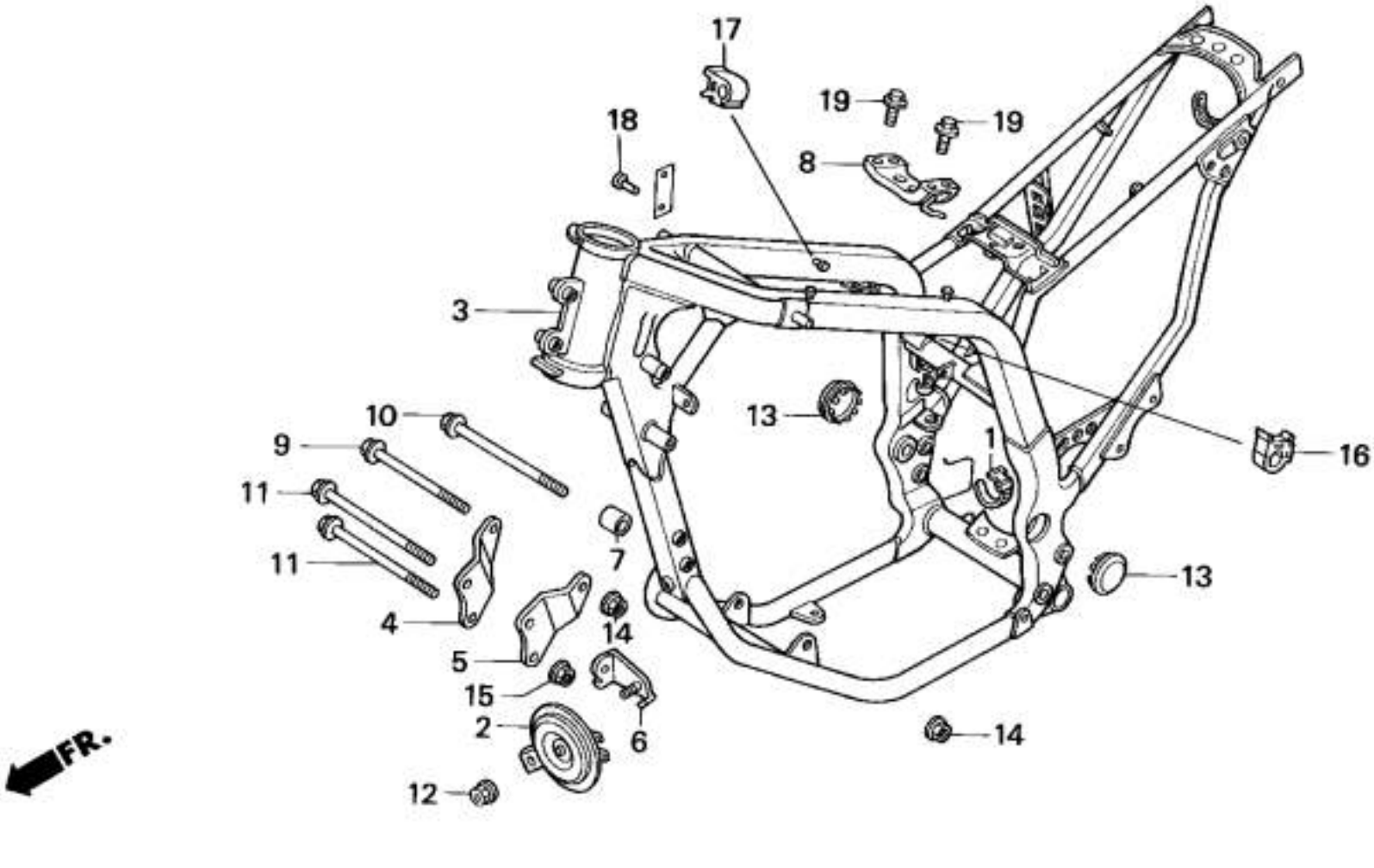

MAW3-F2800

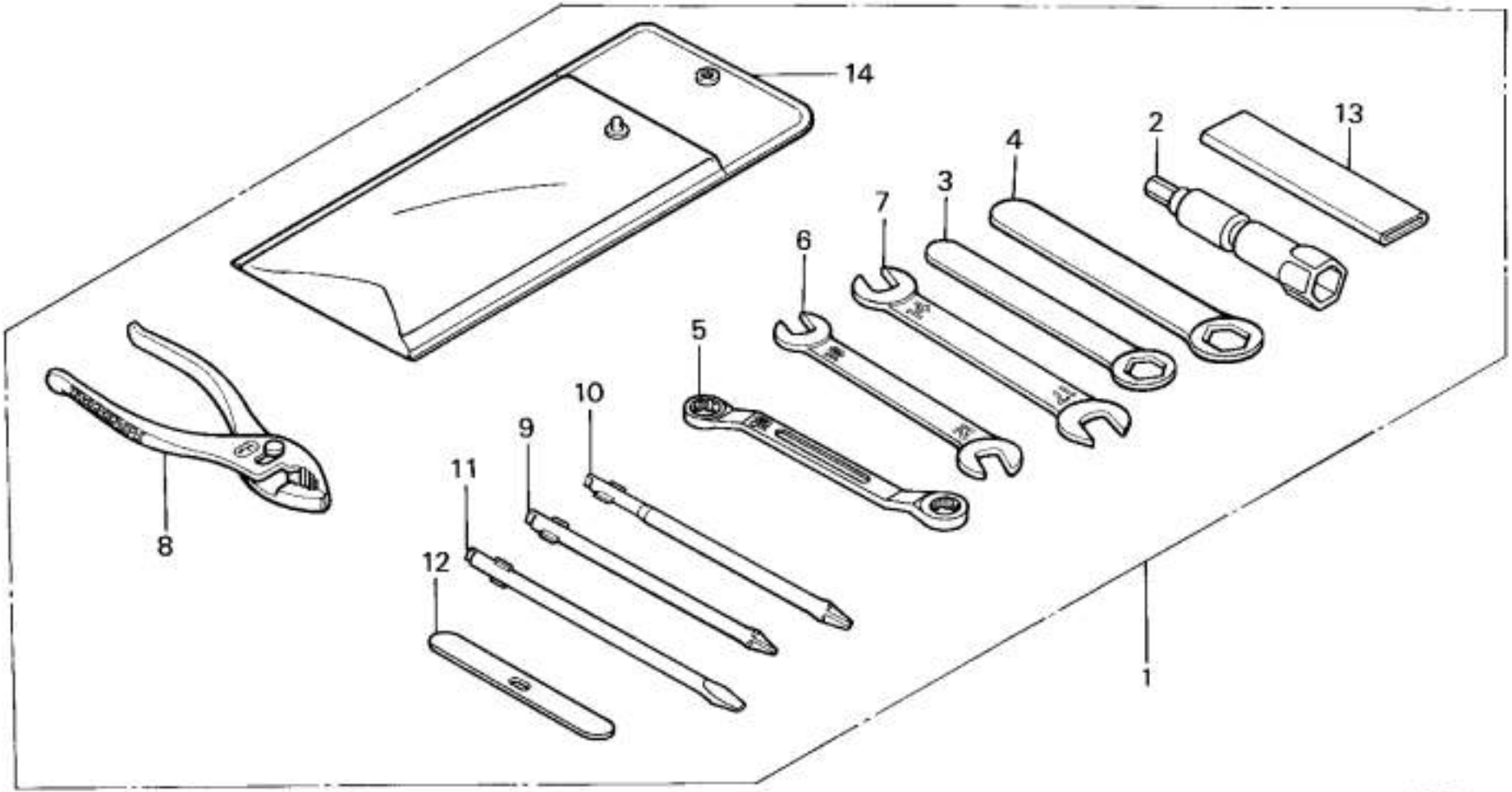
14
13
2
4
3
7
6
5
10
9
11
12
8
1
MAW3-F2900

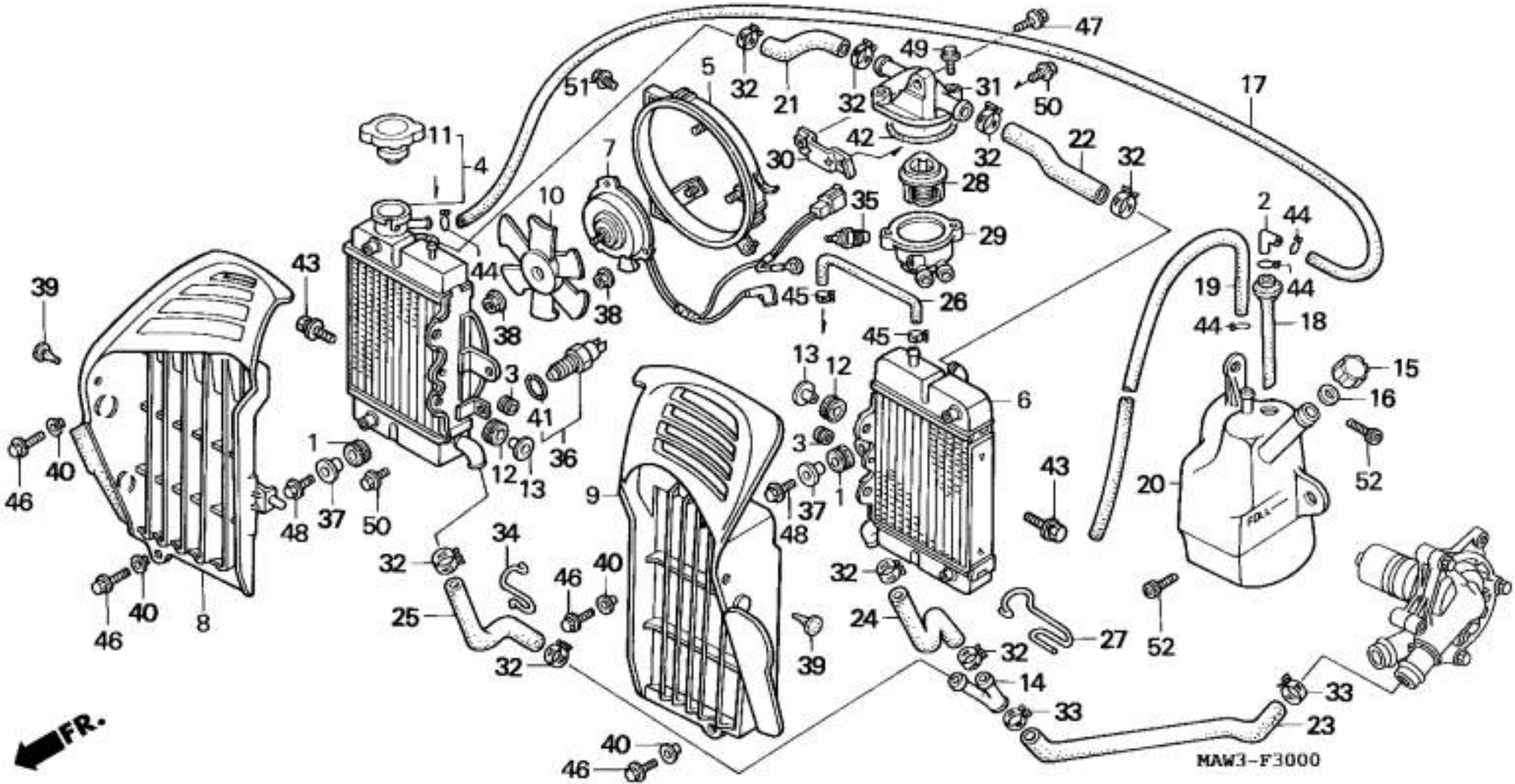
FR.
MAW3-F3000

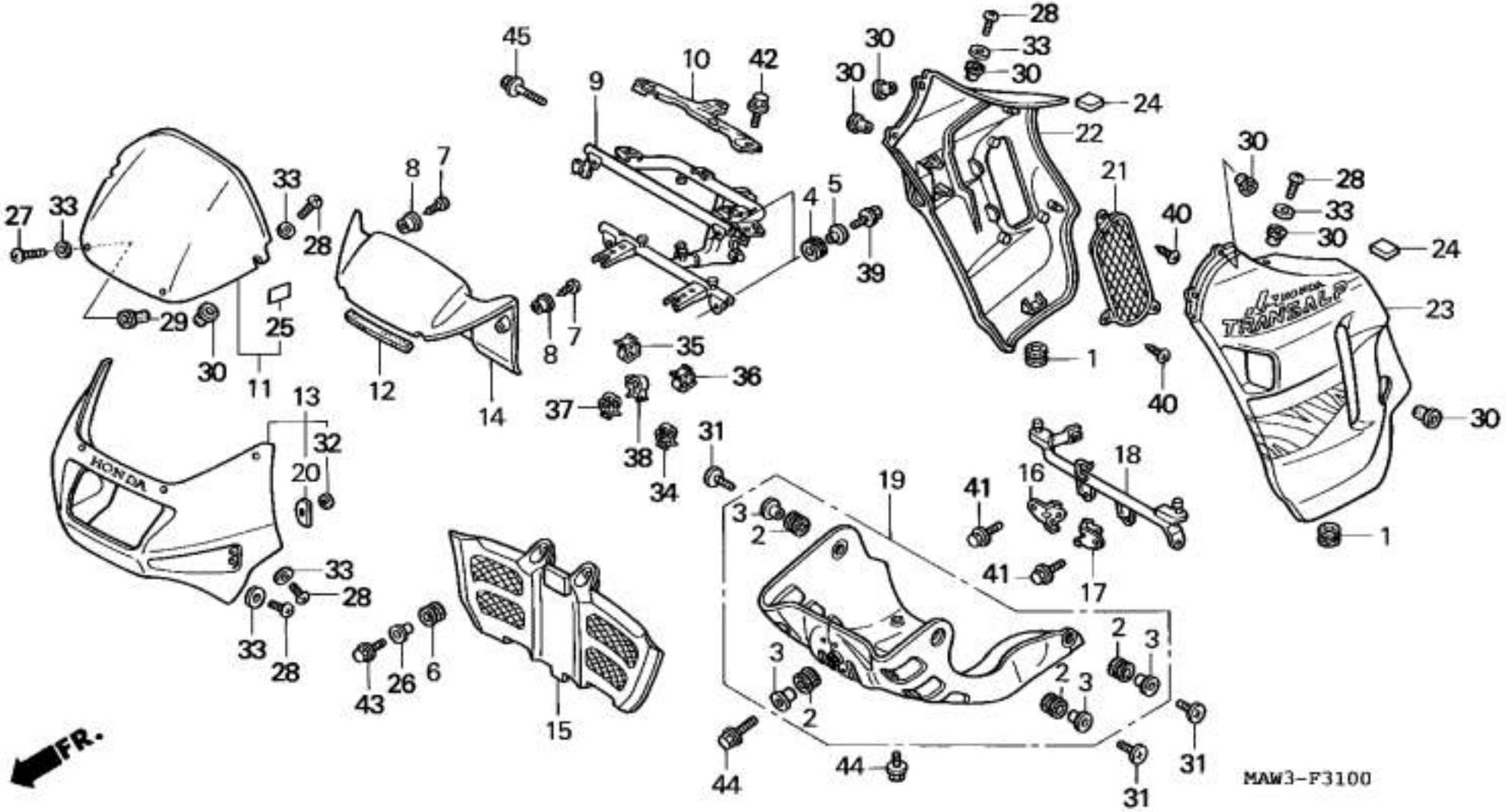

HONDA
TRANSALP
FR.
MAW3-F3100

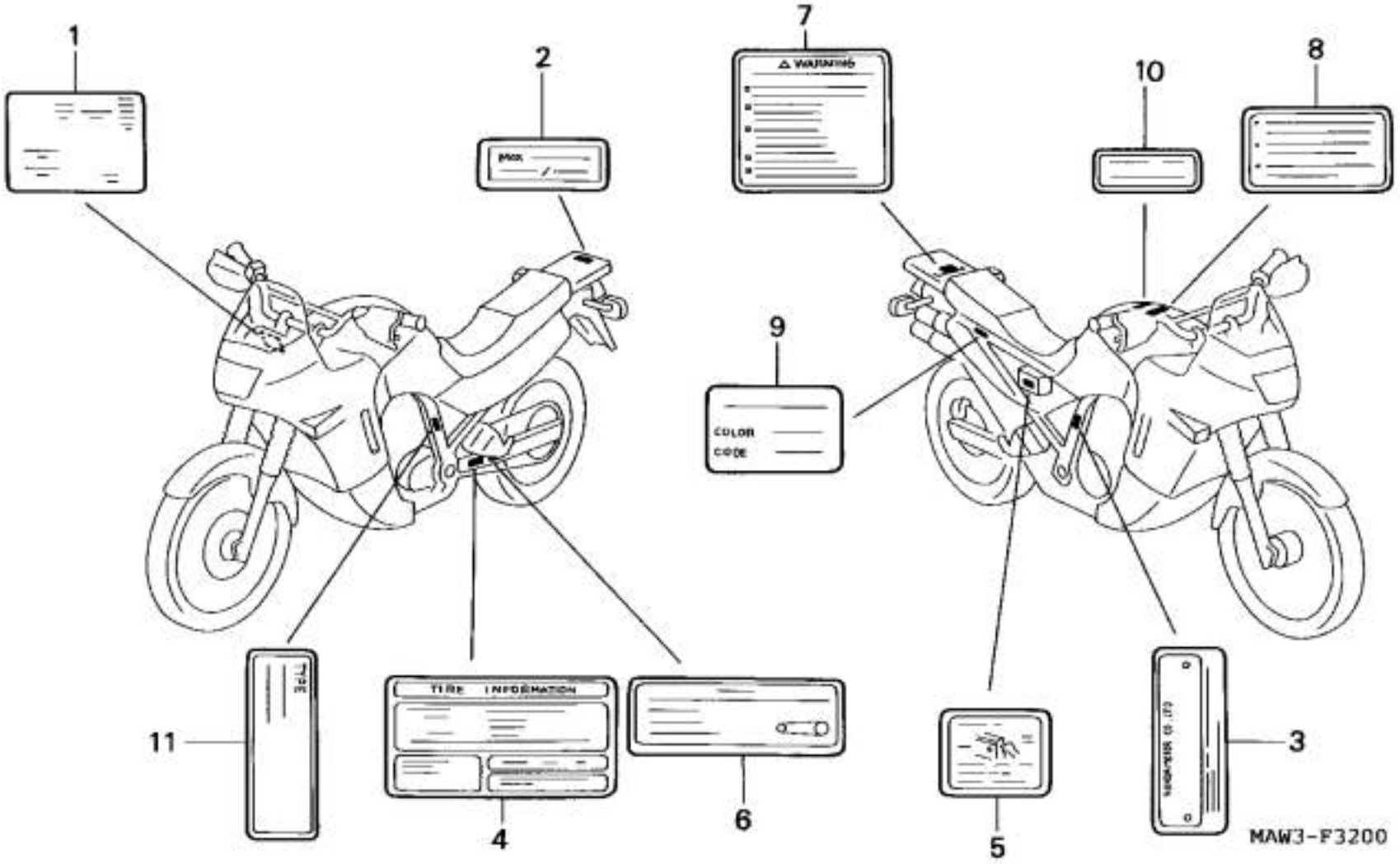
1
2
7
10
8
9
COLOR
CODE
11
TIRE INFORMATION
4
6
5
3
MAW3-F3200

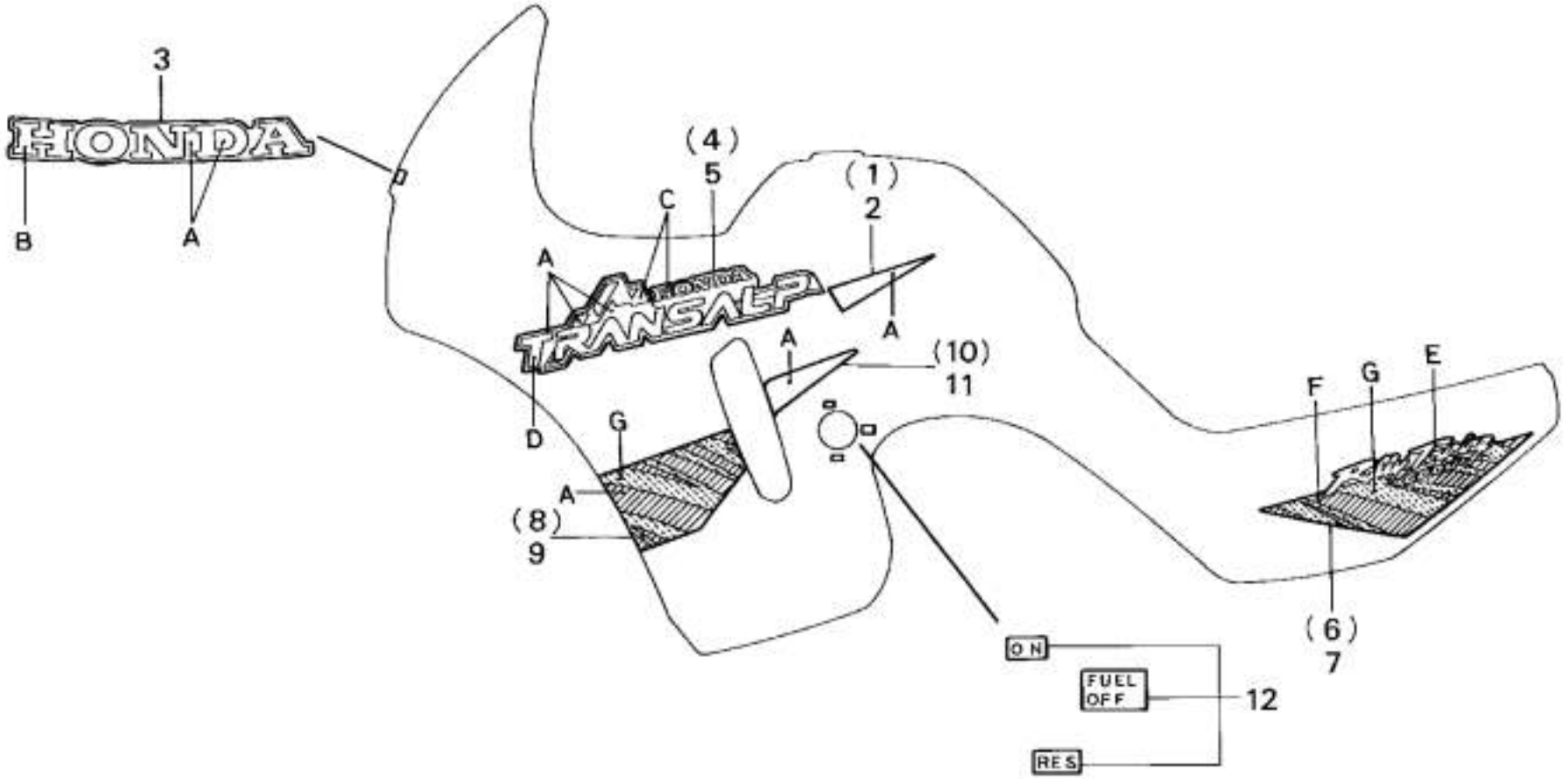
3
HONDA
B
A
(4)
5
C
(1)
2
A
HONDA
TRANSALP
A
A
(10)
11
D
G
A
(8)
9
F
G
E
(6)
7
ON
FUEL
OFF
12
RES

MAW3-F3300

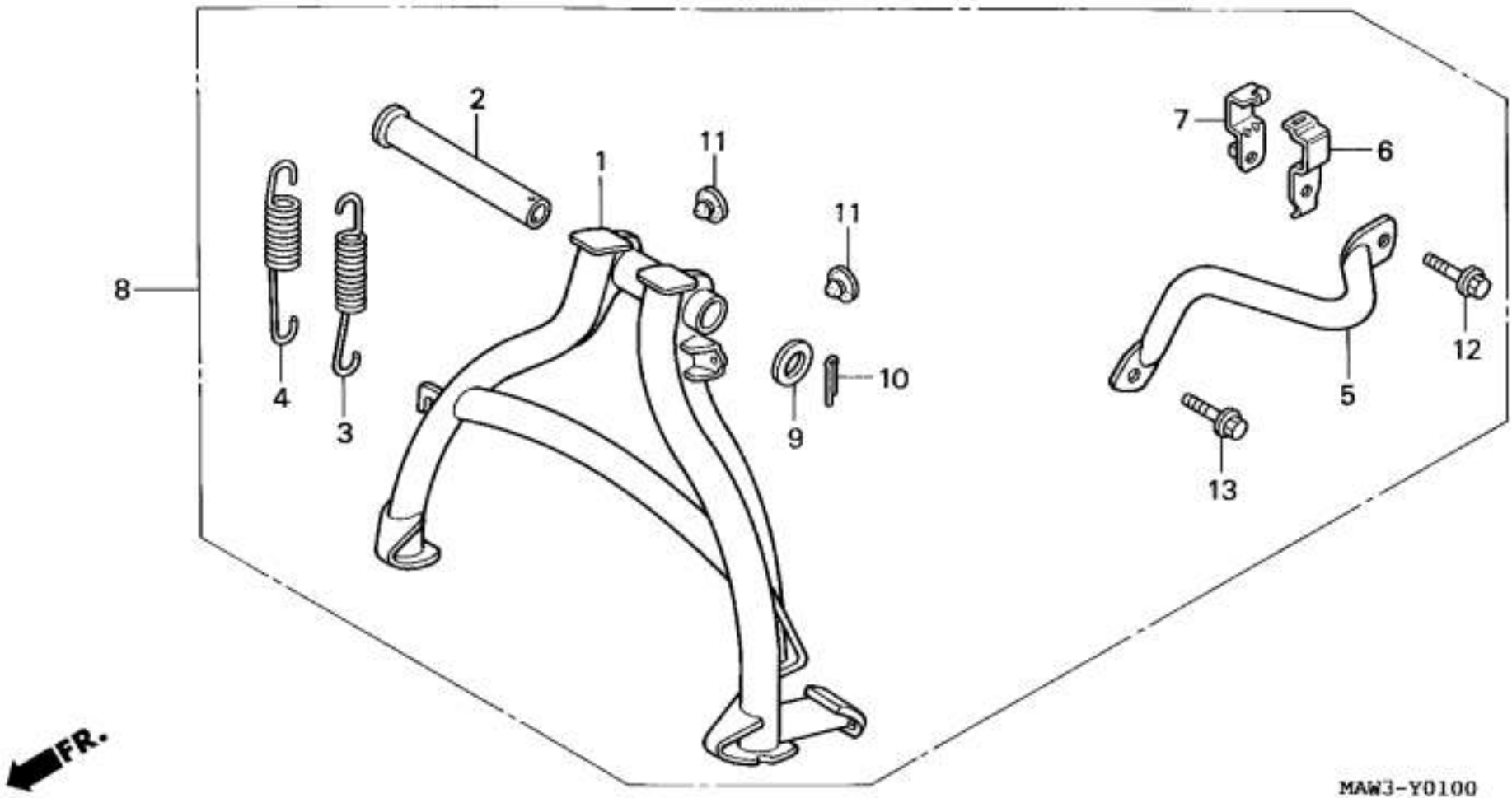
1
2
3
4
5
6
7
8
9
10
11
11
12
13
FR.
MAW3-Y0100

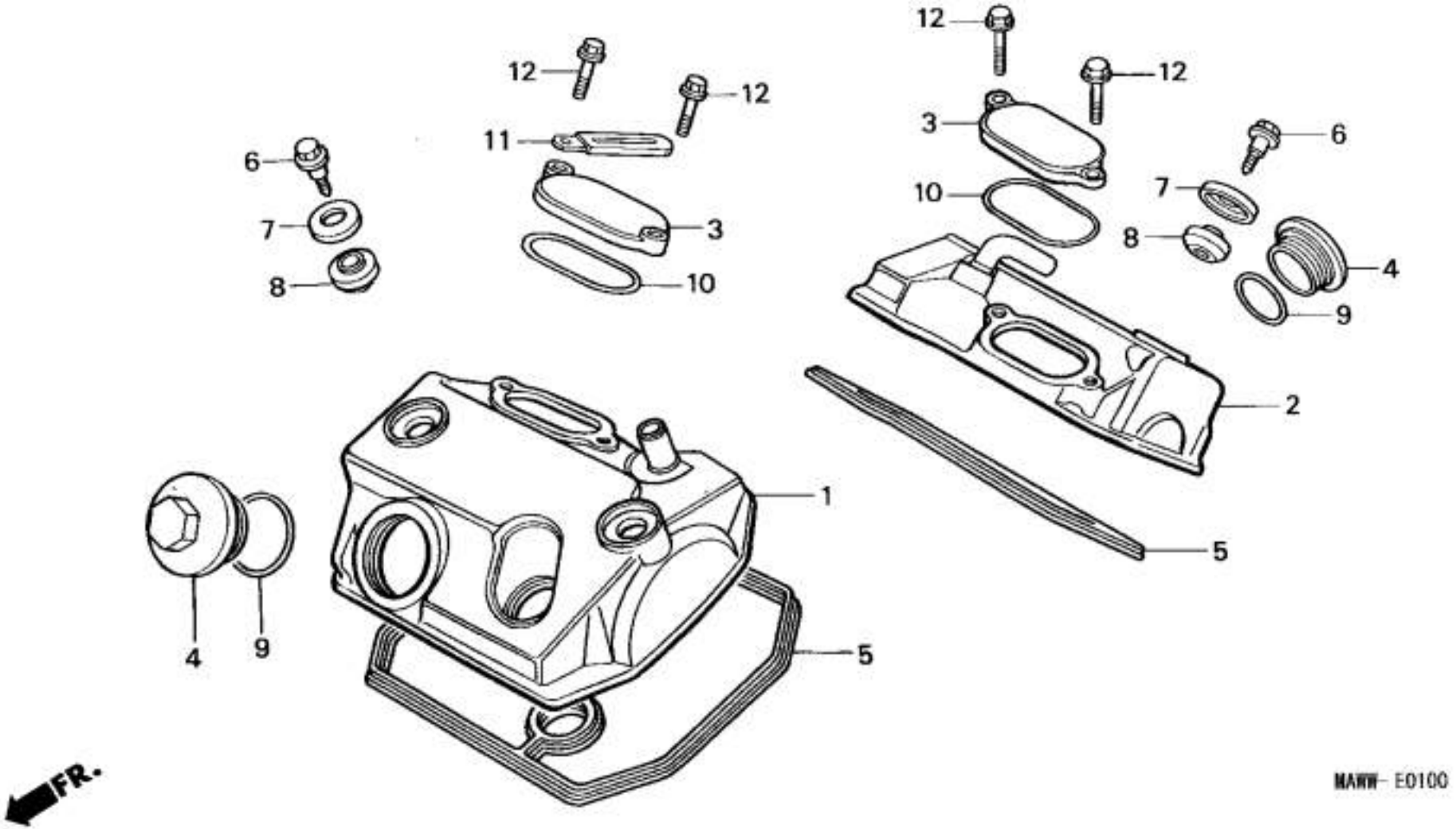
12
12
12
12
11
3
3
6
6
7
7
8
8
10
10
4
4
9
9
2
1
5
5
FR.
MAWW- E0100

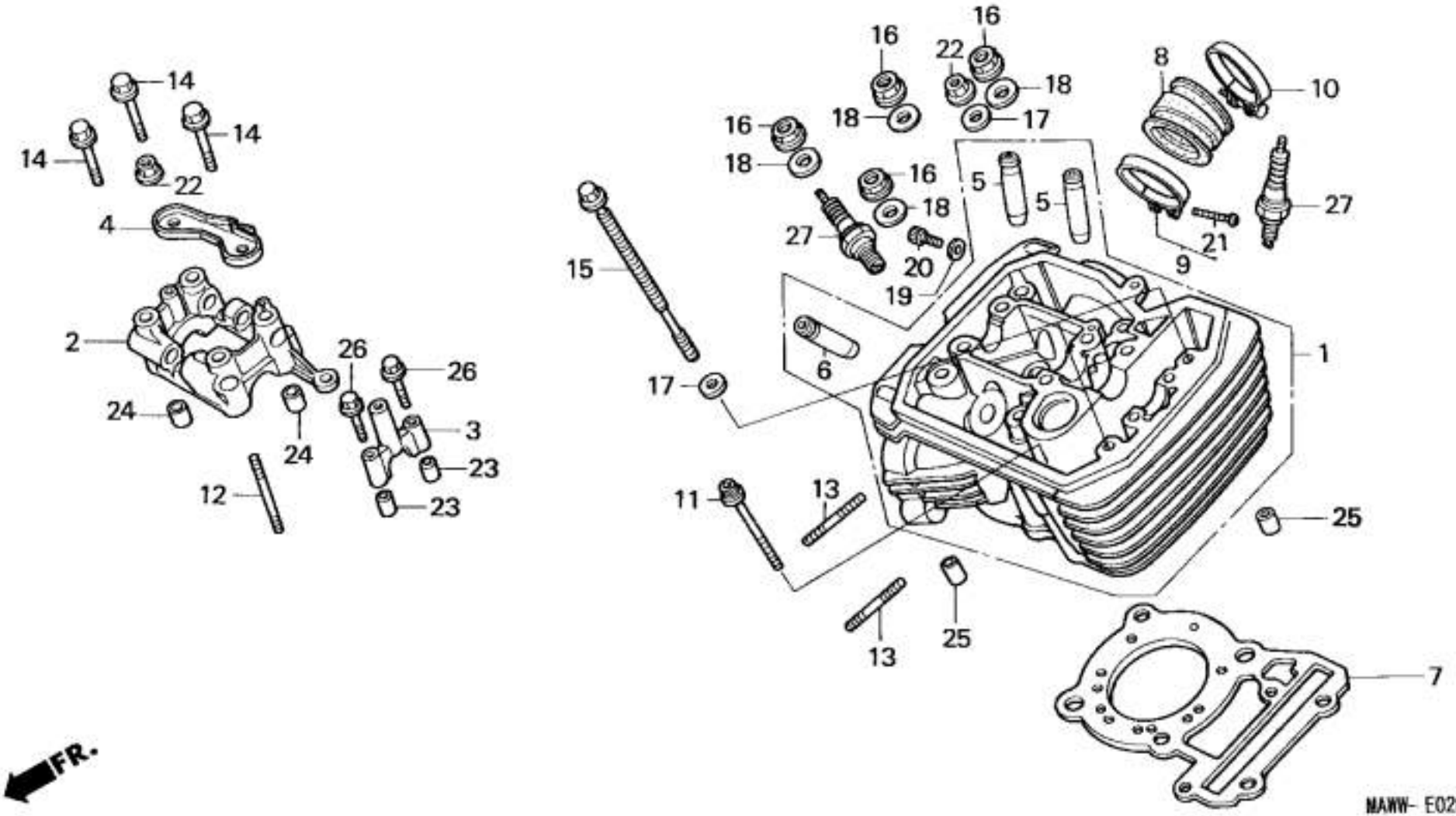

14
14
14
22
4
2
26
26
24
24
3
23
23
12
16
16
22
18
18
17
8
10
16
18
16
18
5
5
27
27
21
9
20
19
15
6
1
17
11
13
25
13
25
7
FR.
MAWW- E0200

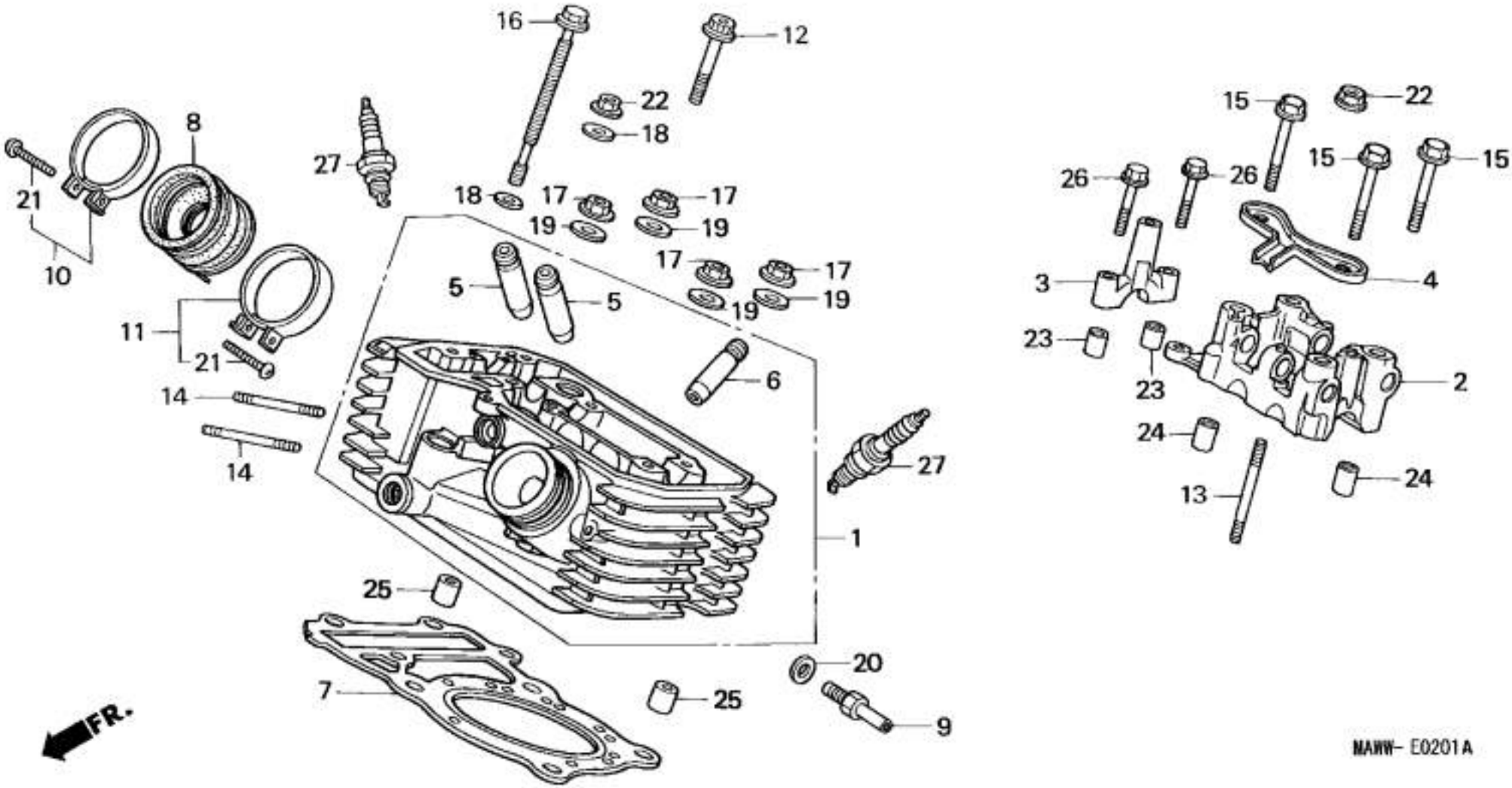
16
12
22
18
27
18
17
17
19
19
17
17
19
19
8
21
10
11
21
5
5
6
14
14
27
1
25
20
7
25
9
FR.
15
22
26
26
15
15
3
4
23
23
2
24
24
13
MAWW- E0201A

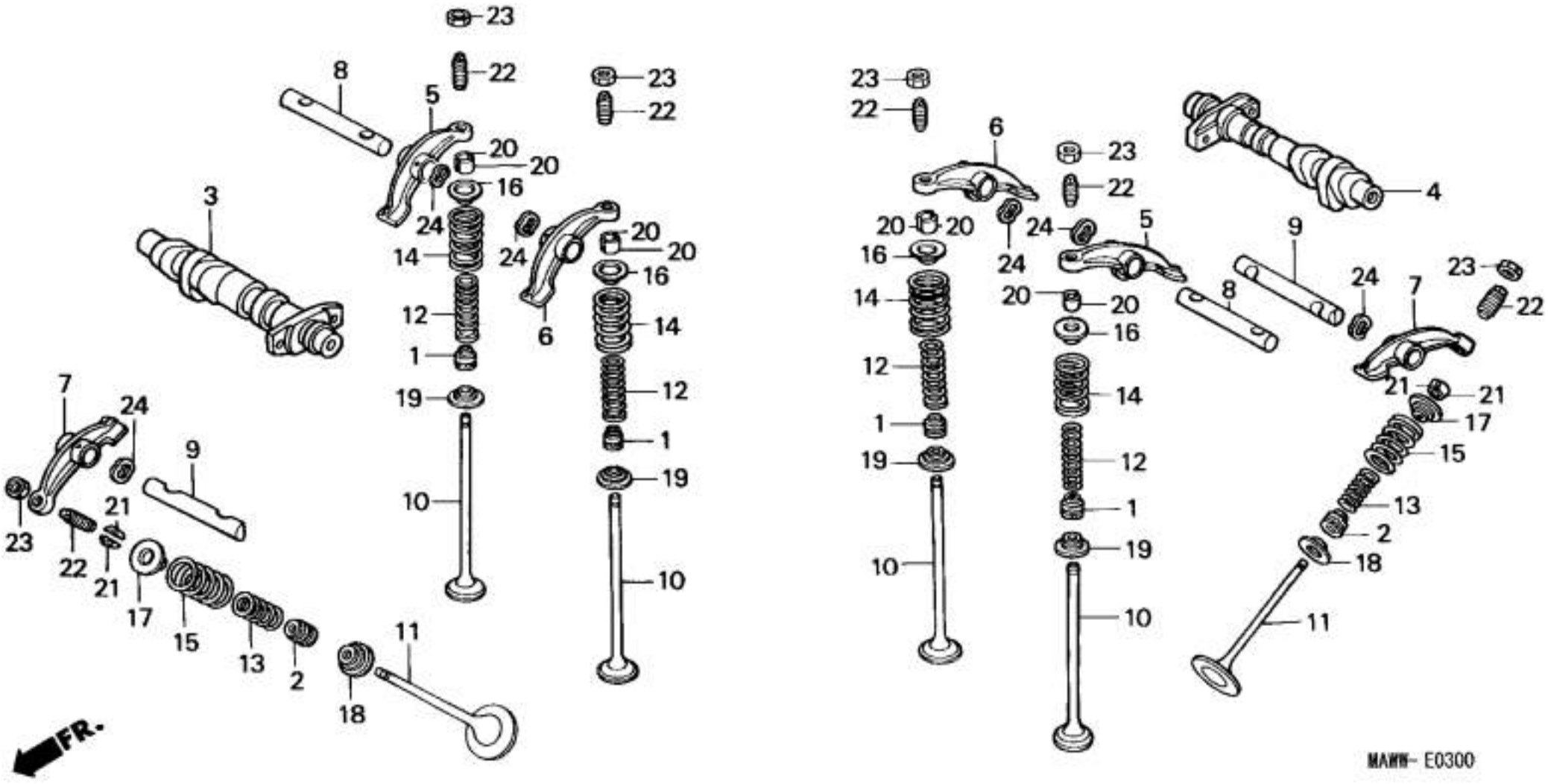
FR.
MAWW- E0300

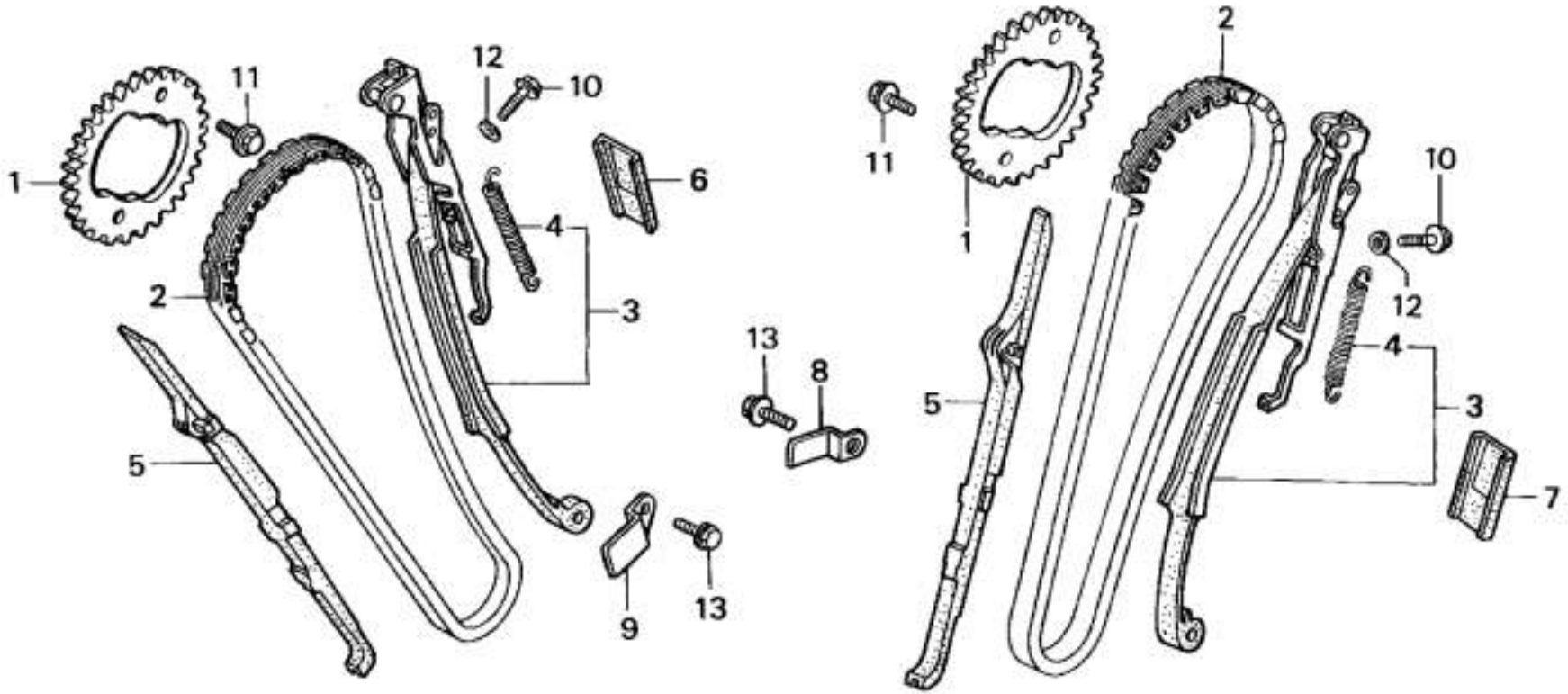
1
11
12
10
6
4
3
2
5
13
8
9
13
11
2
1
10
12
4
3
5
7
FR.
MAWW-E0400

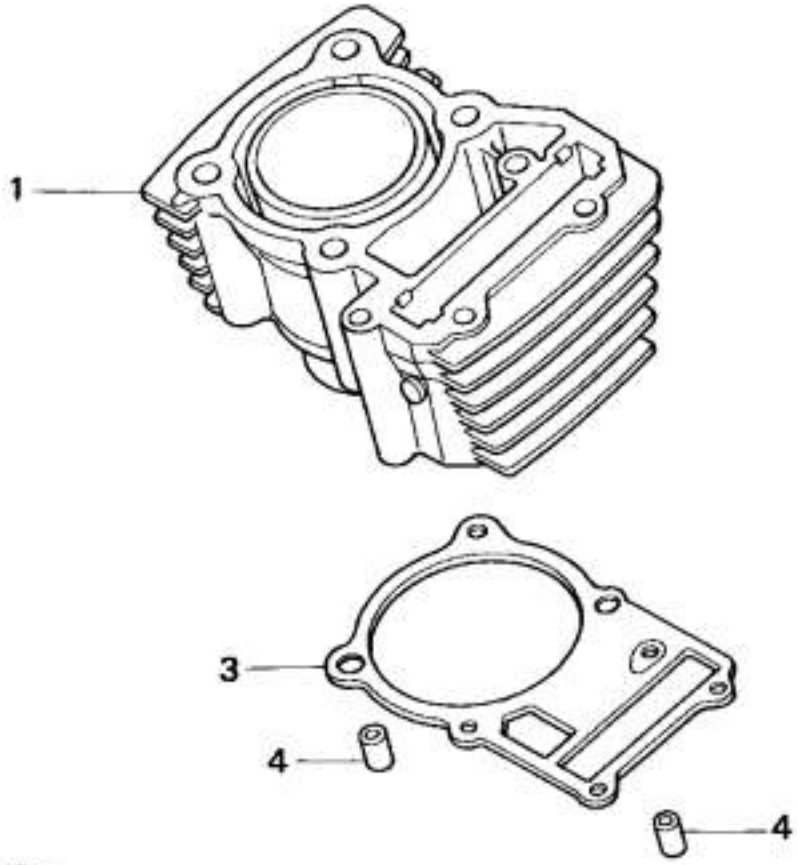

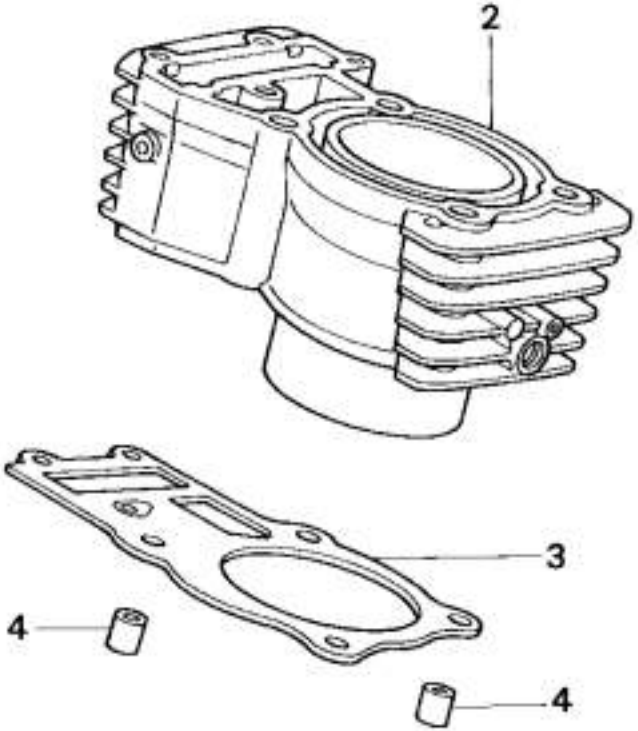

MAWW-E0500

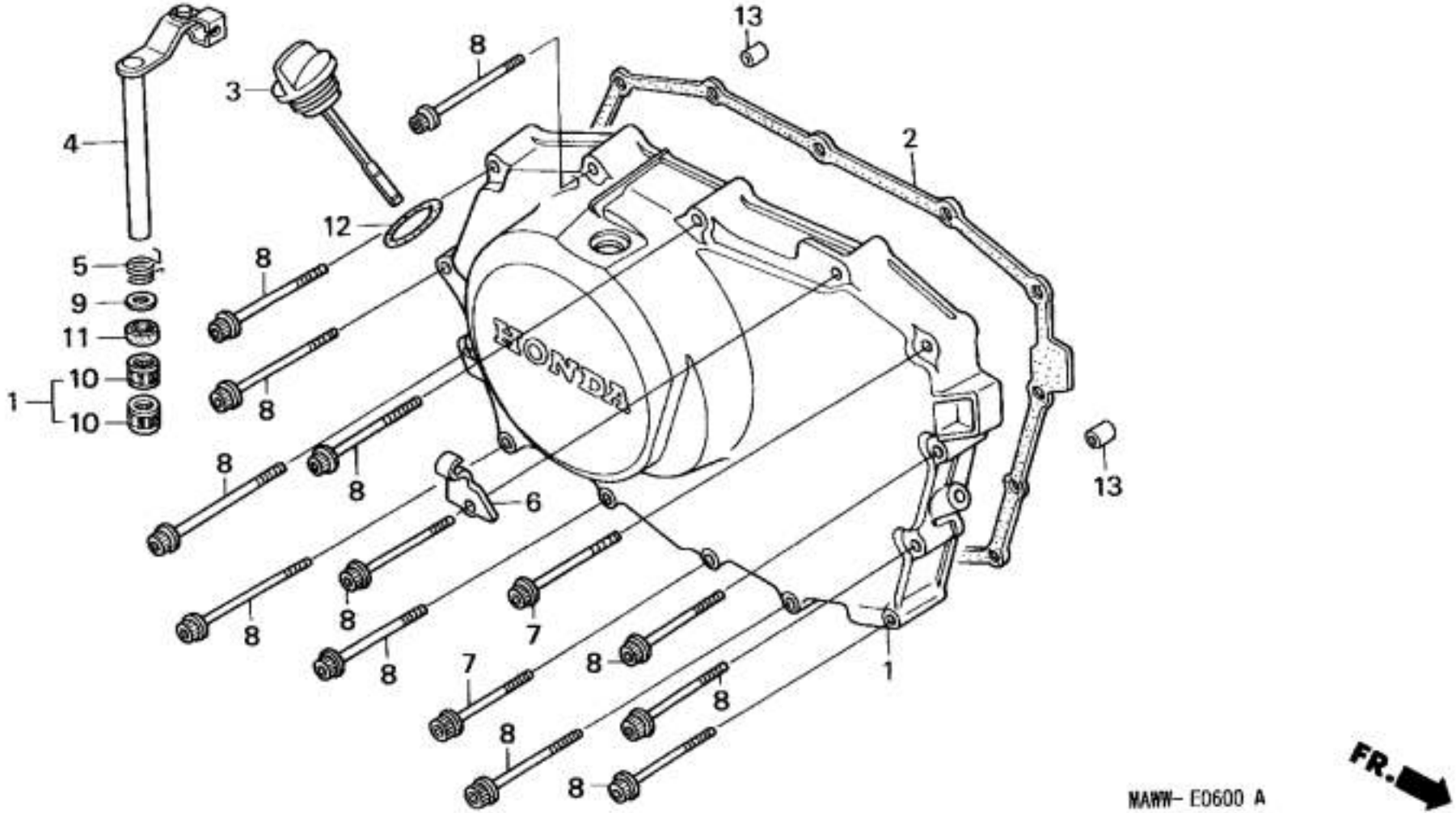

13
8
3
4
2
12
5
9
11
10
1
10
8
8
8
8
6
13
8
8
7
8
8
7
8
8
8
8
1
HONDA
FR.
MAWW- E0600 A

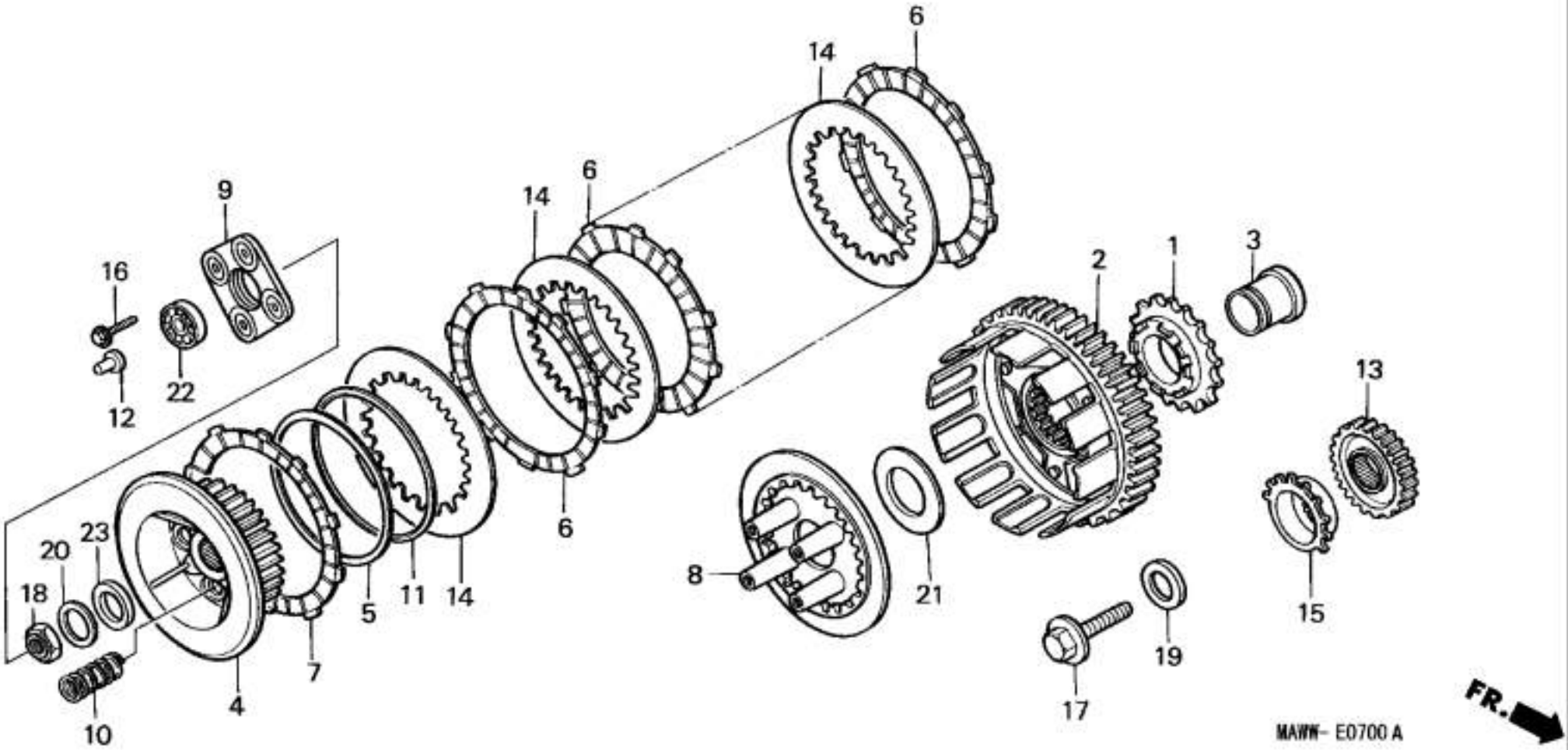
1
2
3
4
5
6
7
8
9
10
11
12
13
14
15
16
17
18
19
20
21
22
23
FR.
MAWN- E0700 A

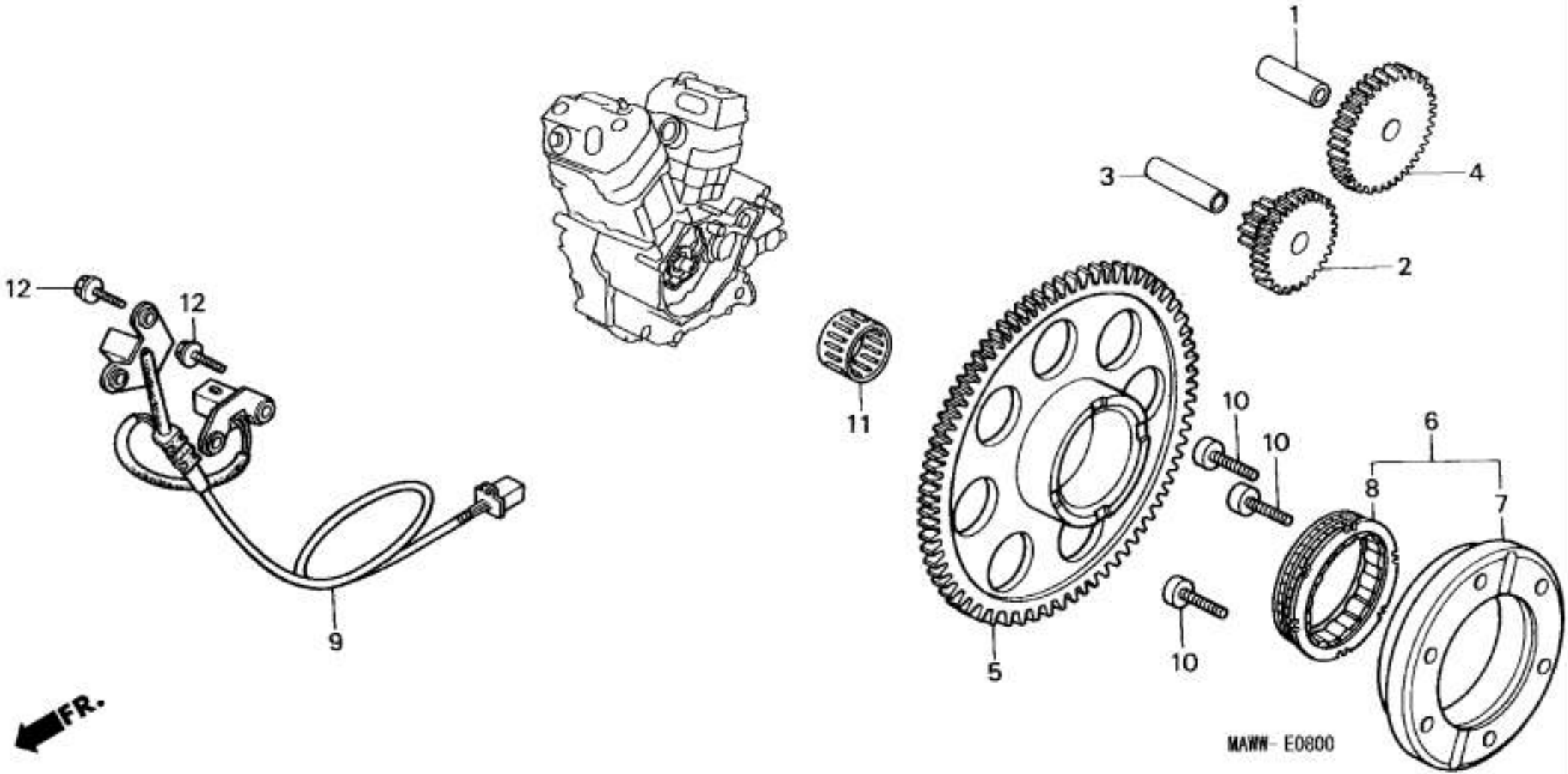
1
2
3
4
5
6
7
8
9
10
10
10
11
12
12
FR.
MAWN- E0800

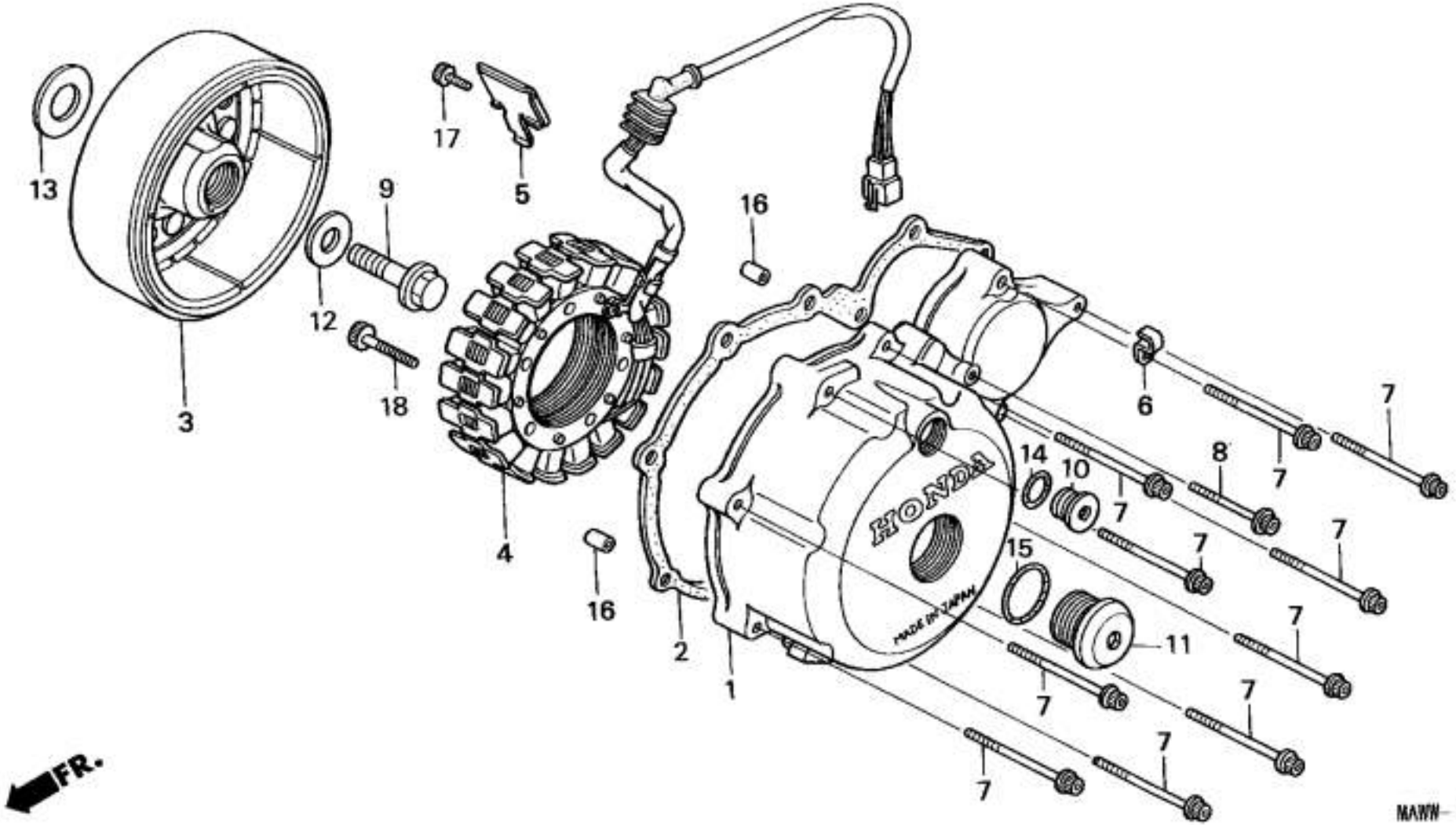
13
3
9
12
18
17
5
4
16
16
2
1
6
7
8
14
10
15
11
HONDA
MADE IN JAPAN
FR.
MAWW-E0900

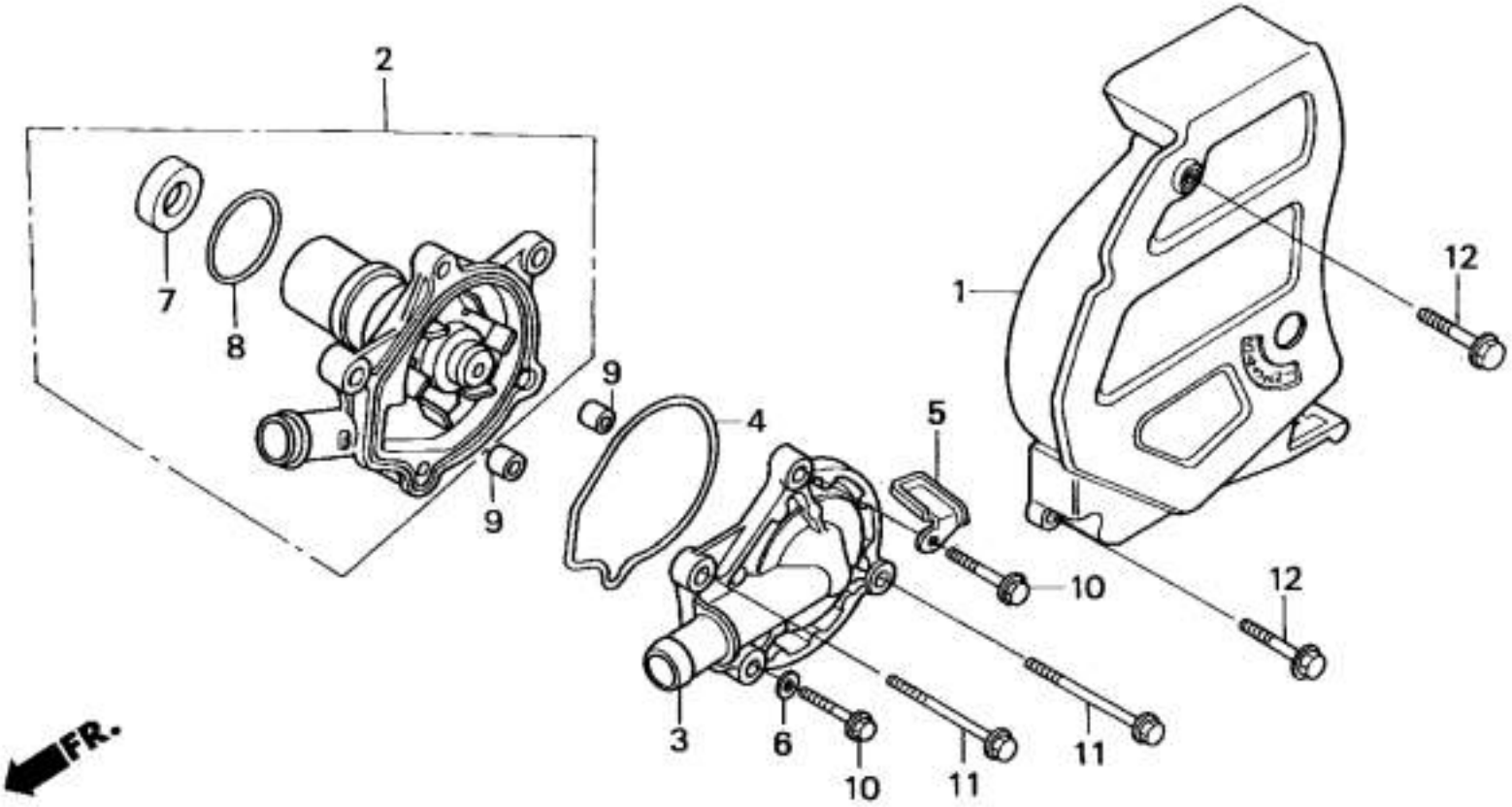

MAWW- E1000

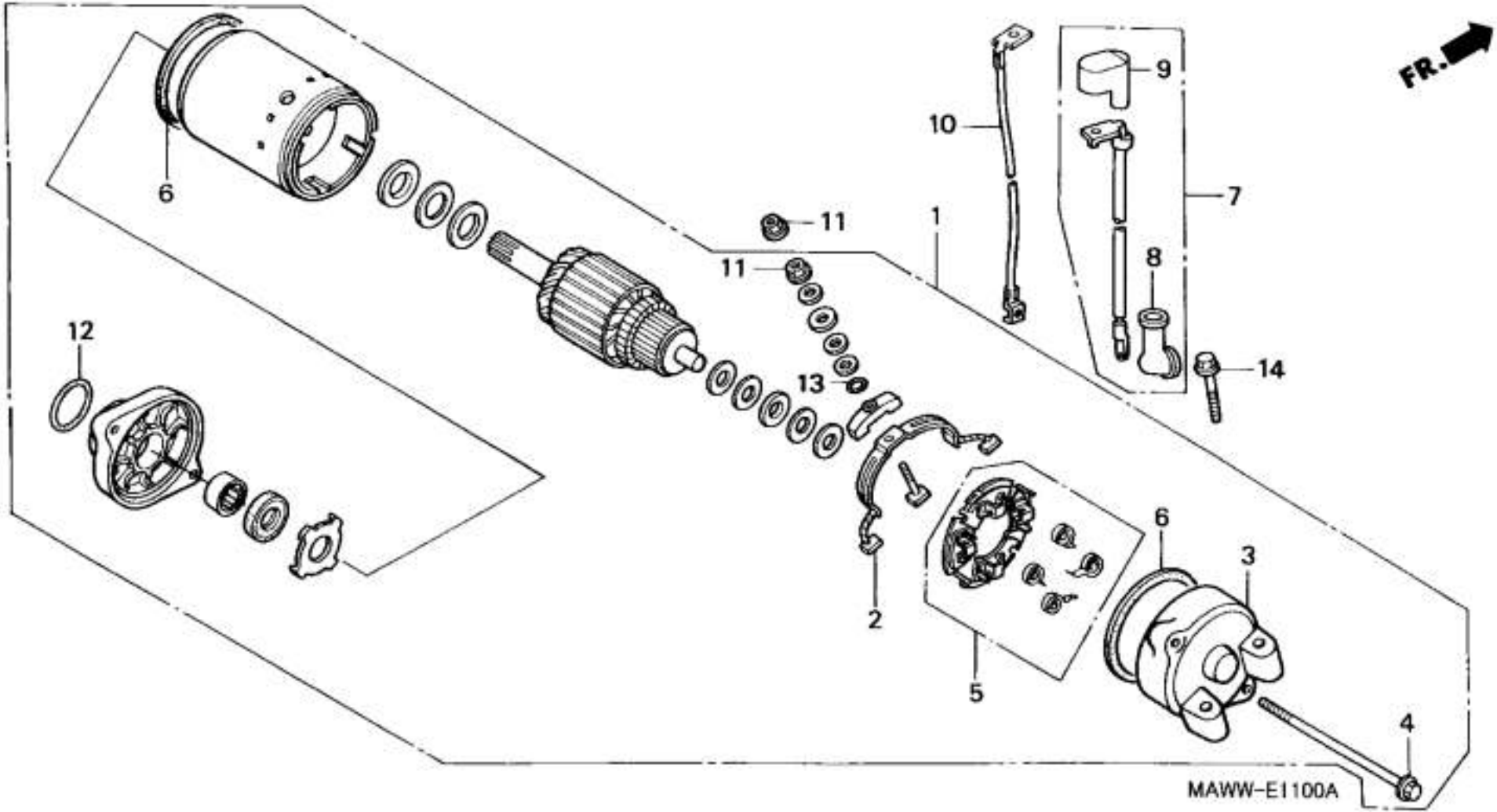
FR.
6
11
11
1
10
9
7
8
14
12
13
2
5
6
3
4
MAWW-E1100A

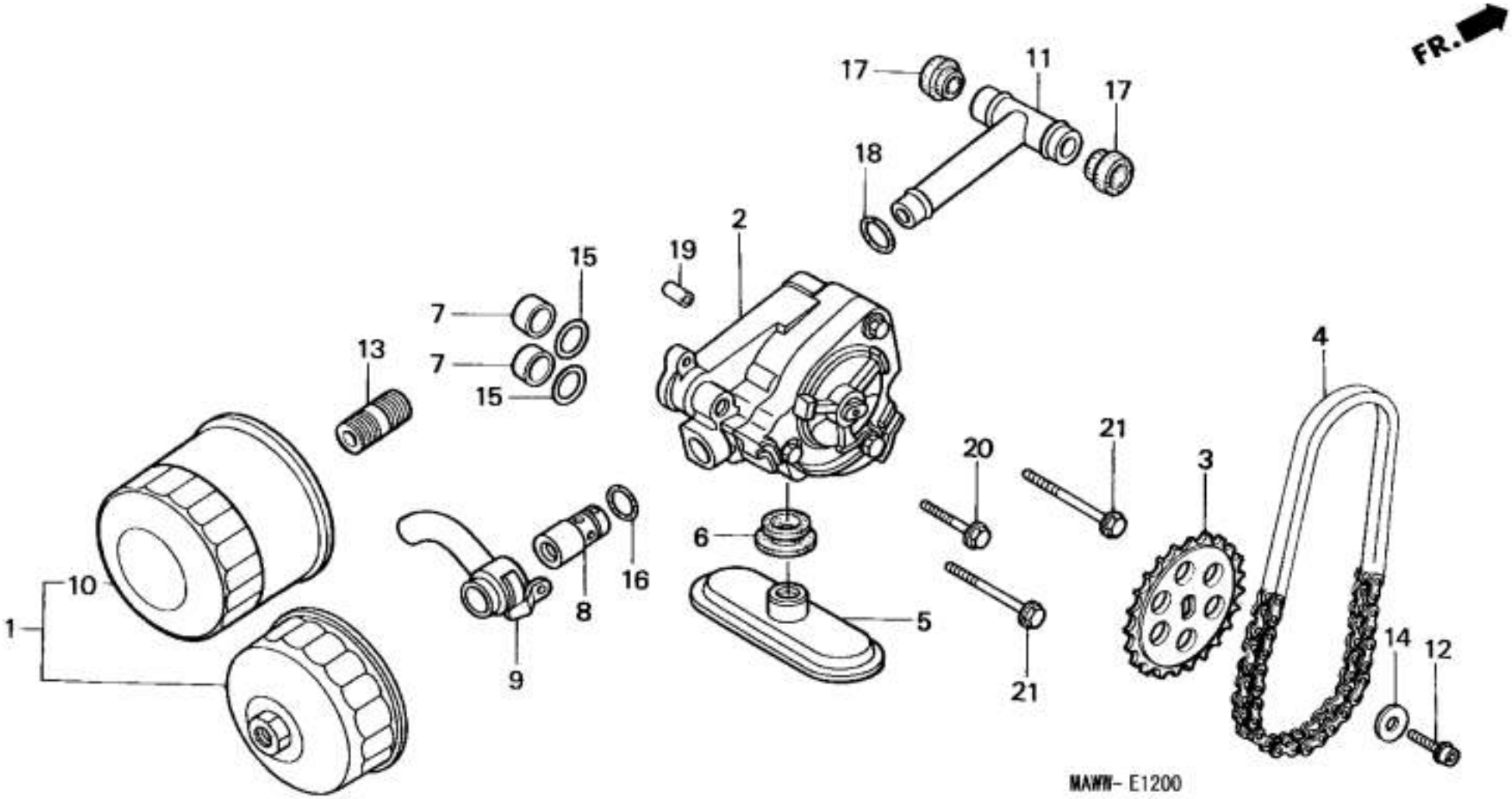
FR.
17
11
17
18
2
19
15
7
7
15
13
4
21
20
3
6
16
8
5
10
1
9
21
14
12
MAWN- E1200

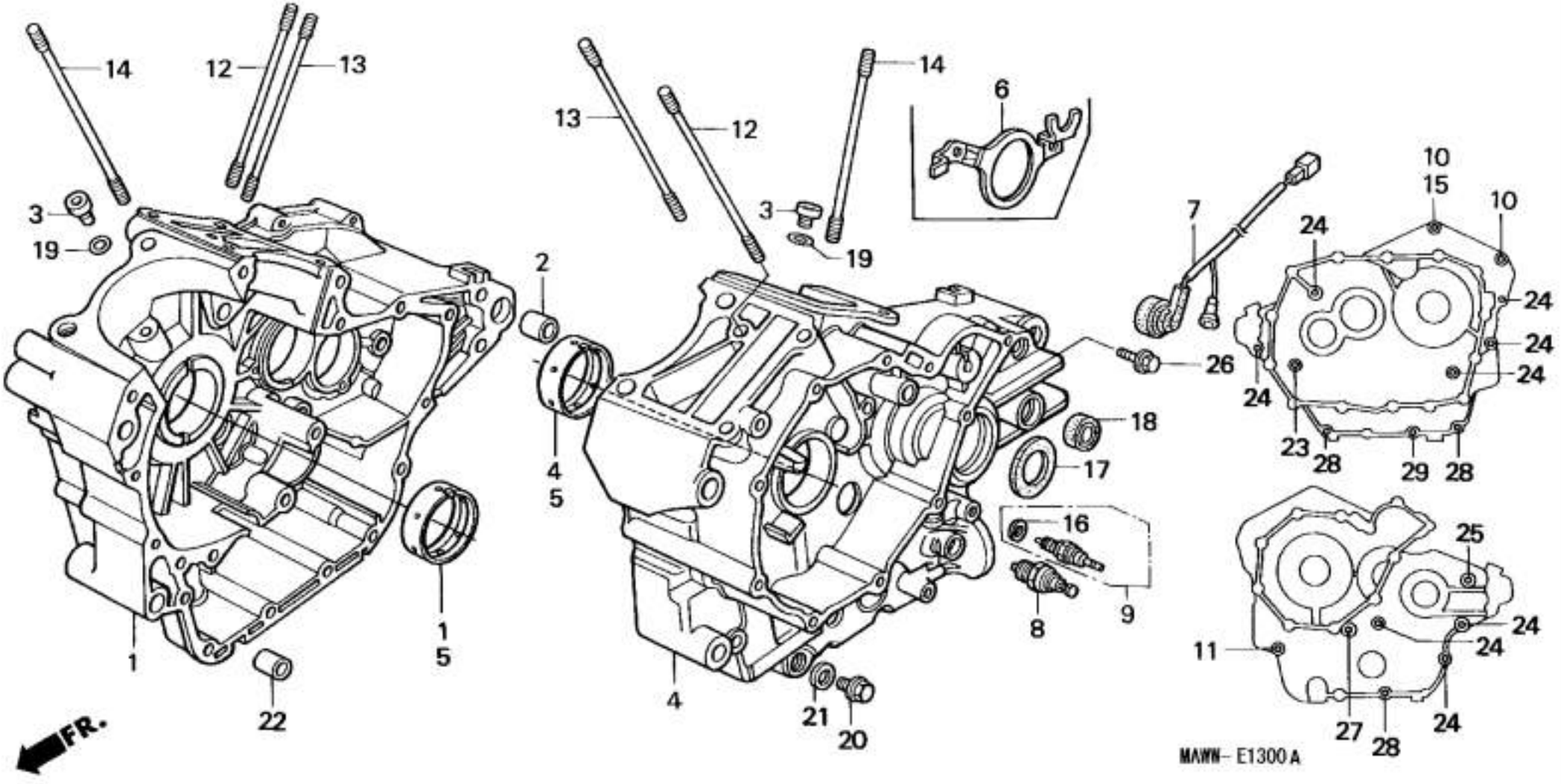
14
12
13
3
19
1
5
22
FR.
13
12
14
6
3
19
2
4
5
4
21
20
26
18
17
16
8
9
7
10
15
10
24
24
24
24
24
24
23
28
29
28
25
24
24
11
27
28
24
MAWN-E1300A

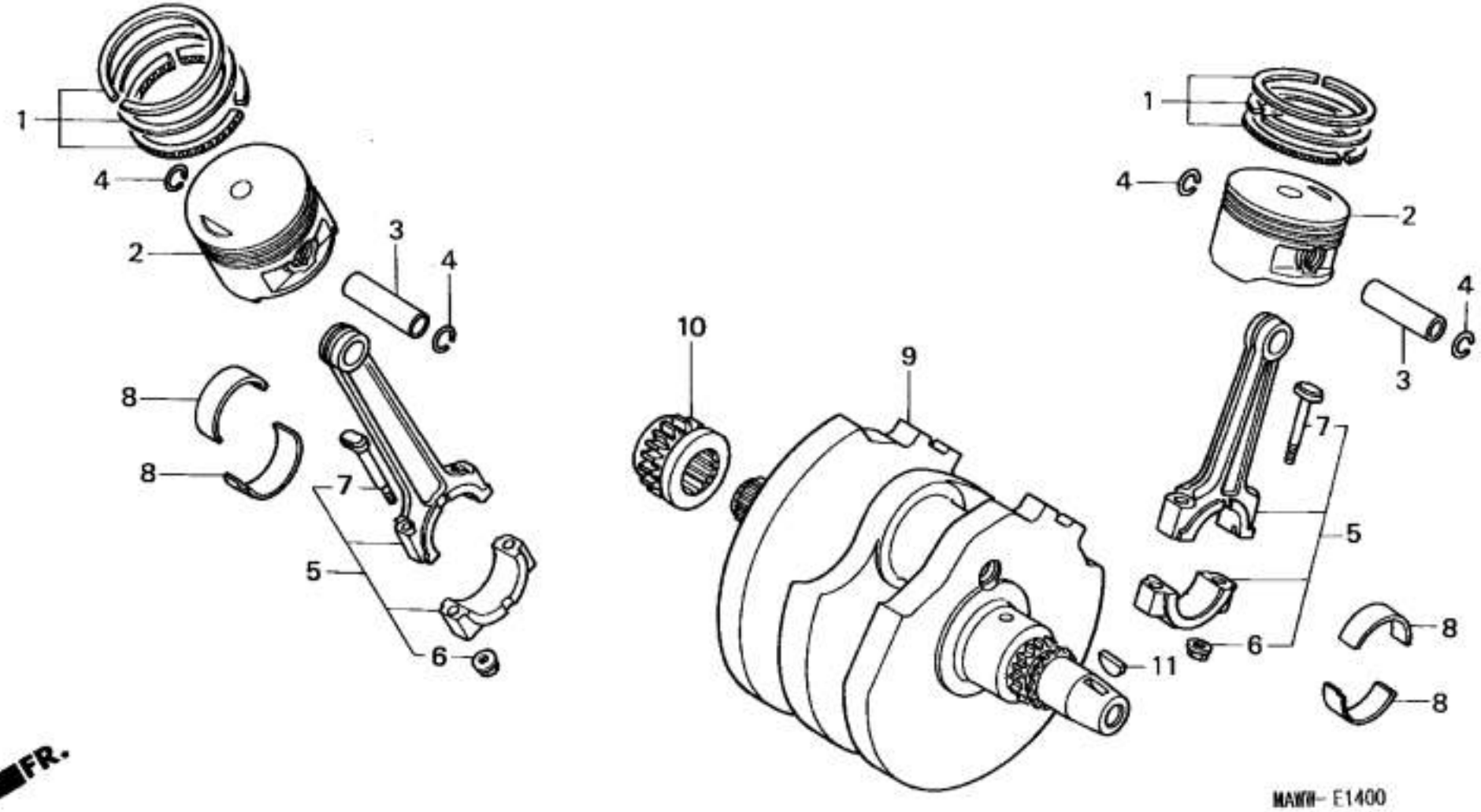
1
4
2
3
4
8
8
7
5
6
10
9
11
1
4
2
4
3
7
5
6
8
8
FR.
MAWH-E1400

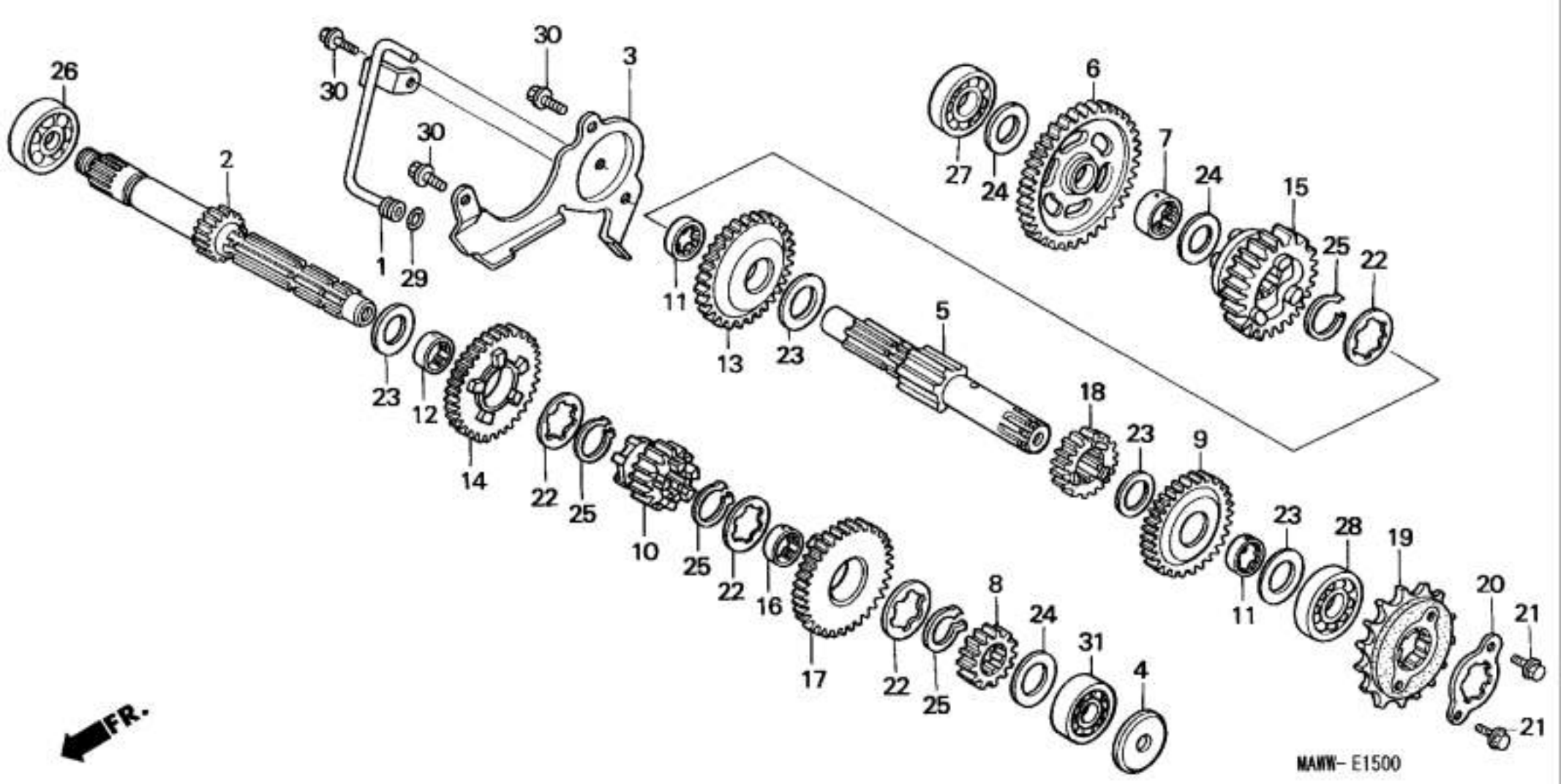
26
30
30
30
3
2
1
29
27
24
6
7
24
15
25
22
11
13
23
5
23
12
14
22
25
10
25
22
16
17
22
25
8
24
31
4
18
23
9
11
23
28
19
20
21
21
FR.
MAMW-E1500

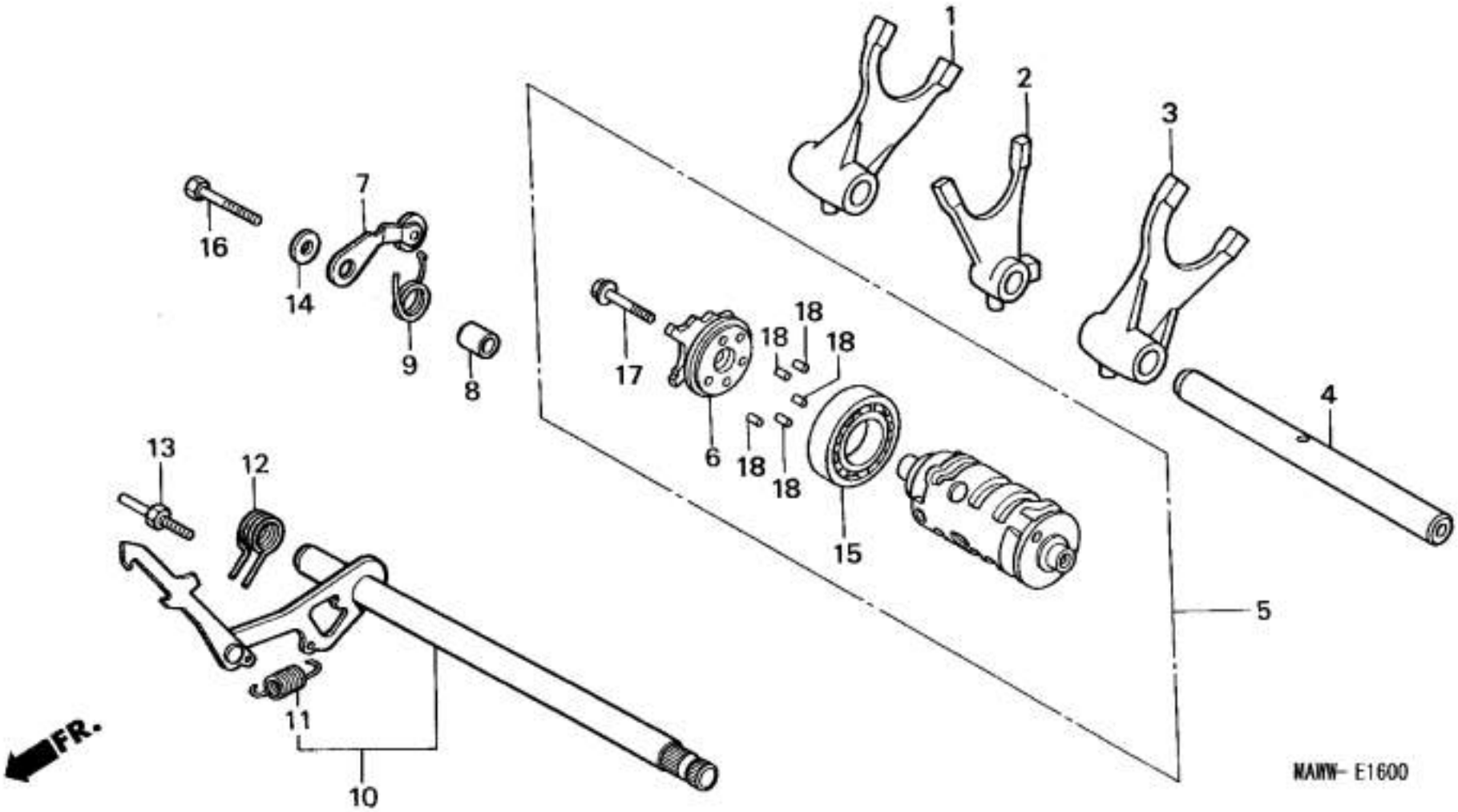
1
2
3
4
5
6
7
8
9
10
11
12
13
14
15
16
17
18
18
18
18
18
18
FR.
MAMW-E1600

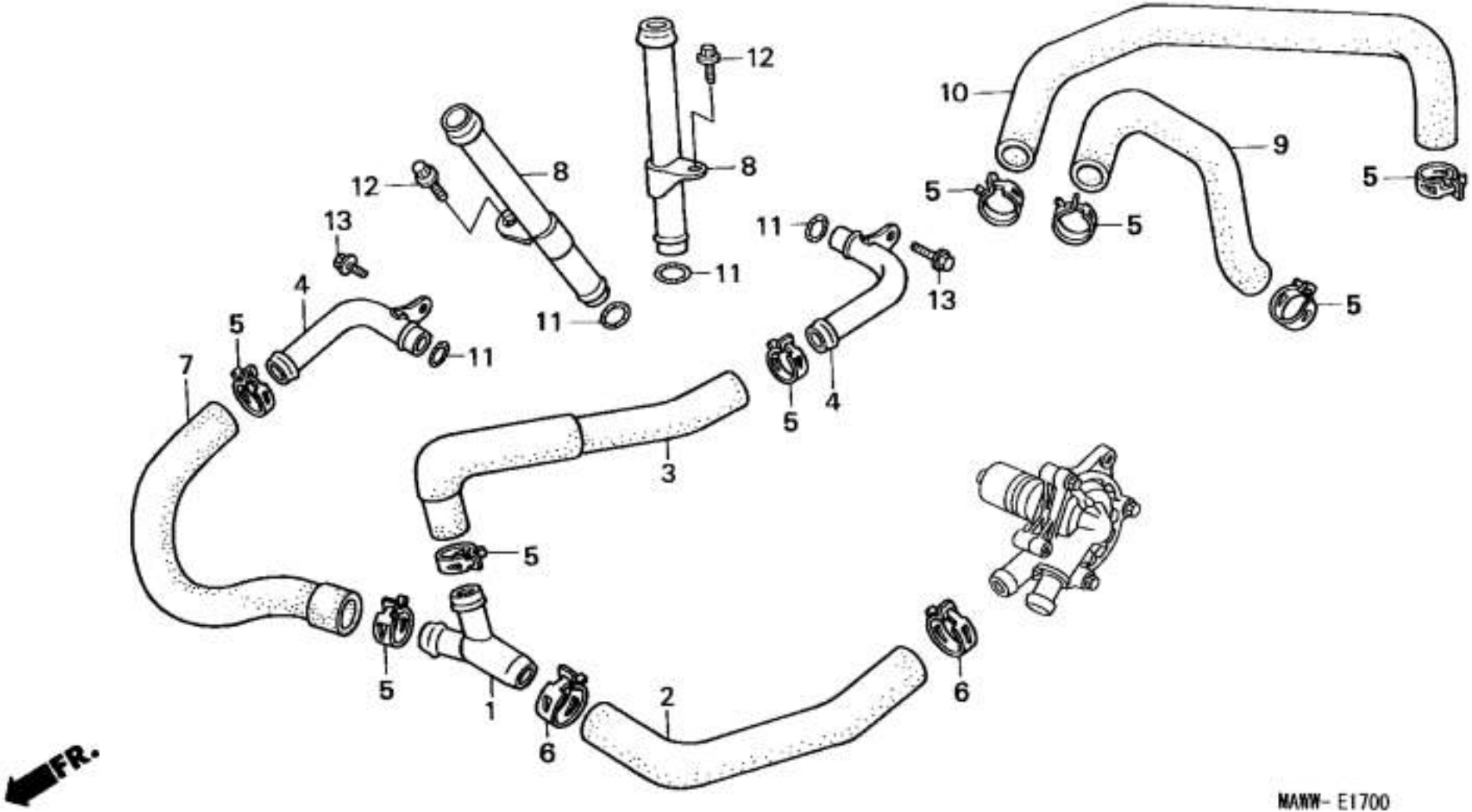

12
10
9
8
8
12
5
5
5
13
11
11
13
4
5
11
11
7
5
4
3
5
5
1
2
6
6
FR.
MAWW- E1700

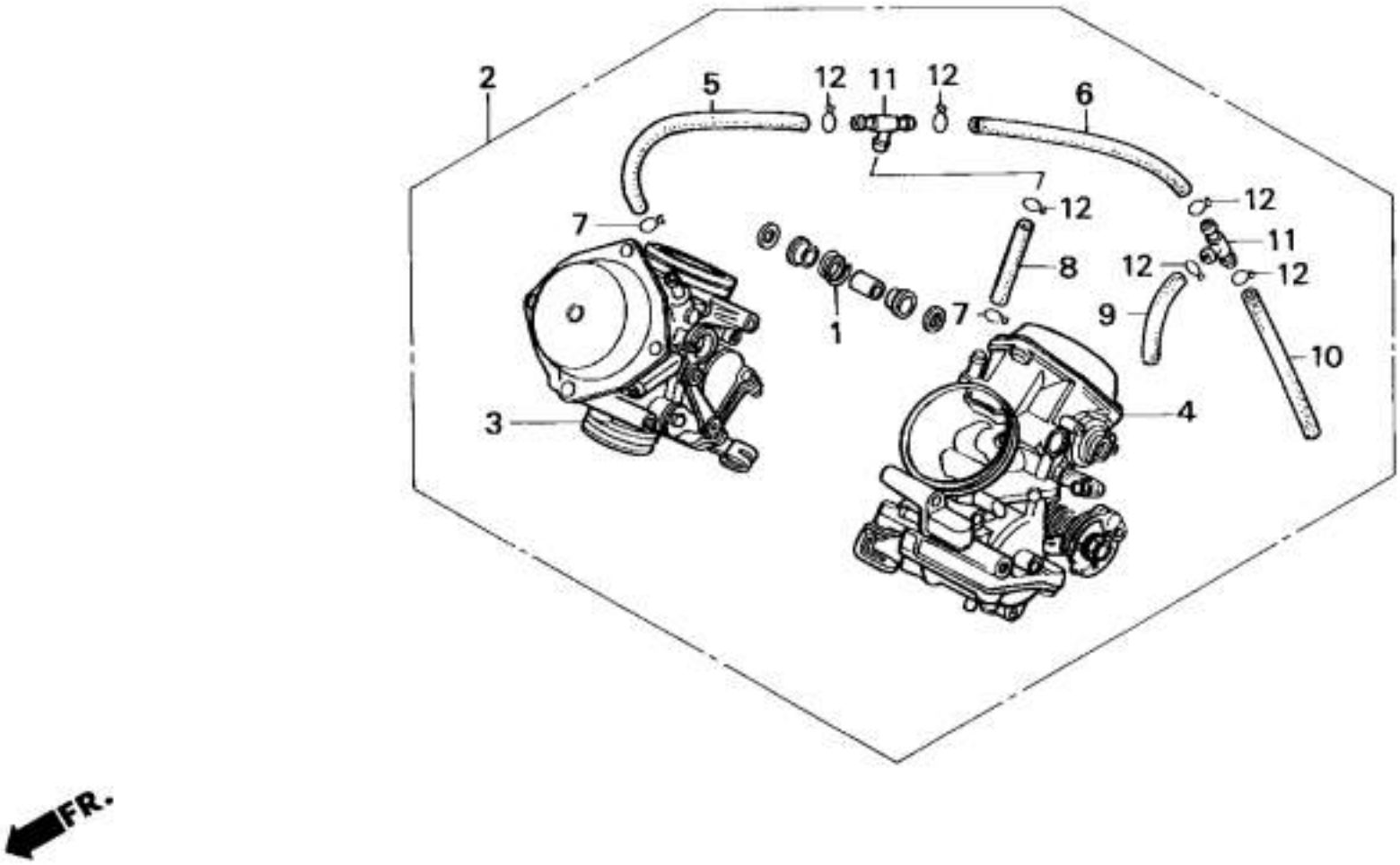

NAWW- E1800

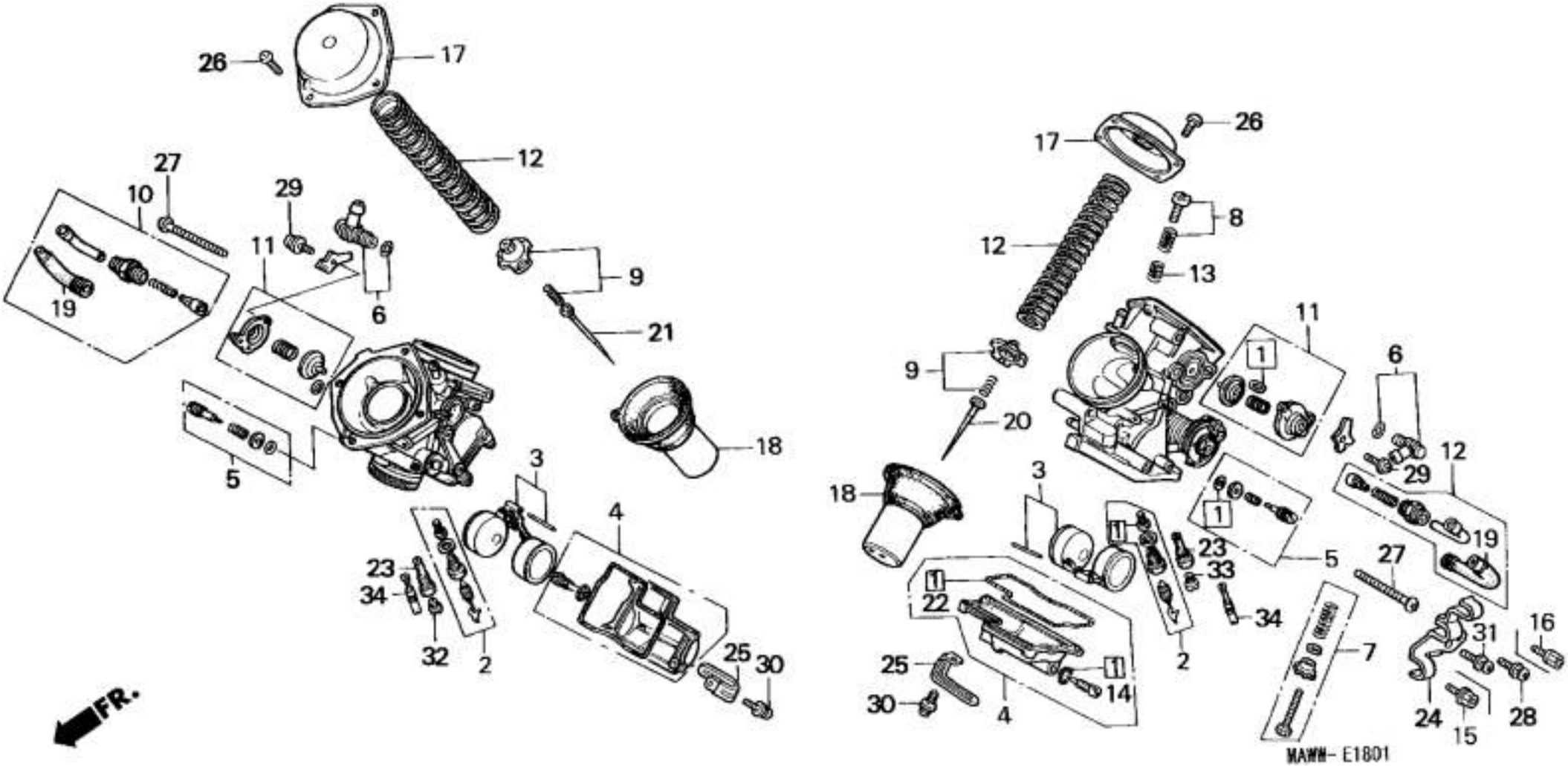

26
17
12
27
10
29
11
6
9
19
21
5
18
3
4
23
34
32
2
25
30
FR.
17
26
8
12
13
11
1
6
9
20
29
12
18
3
1
23
5
19
27
33
1
22
34
16
31
7
25
1
14
2
30
4
24
15
28
MAWW- E1801

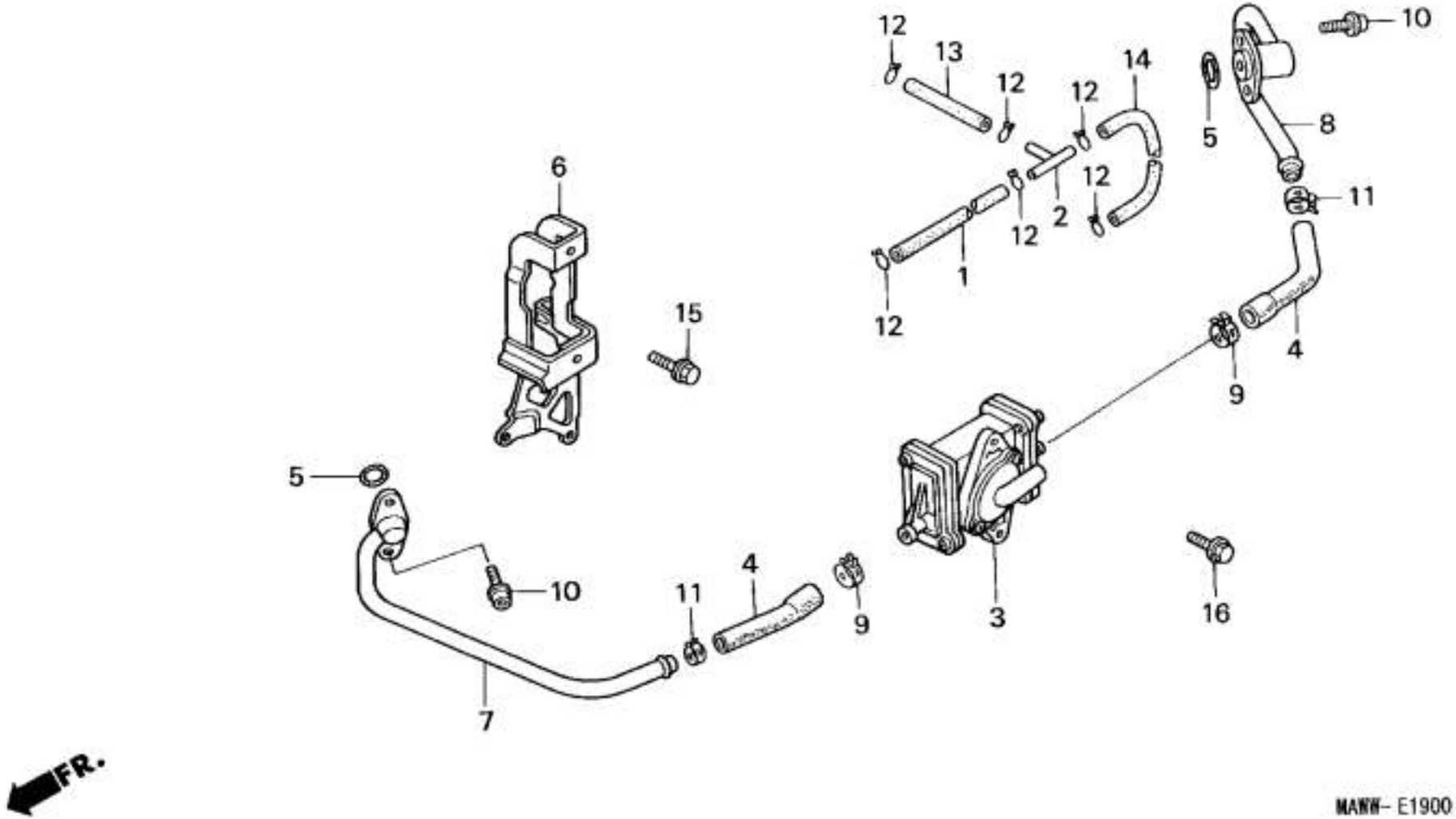

12
13
12
12
14
10
5
8
6
12
2
12
11
1
12
15
4
9
5
10
11
4
9
3
16
7
FR.
MAWW- E1900

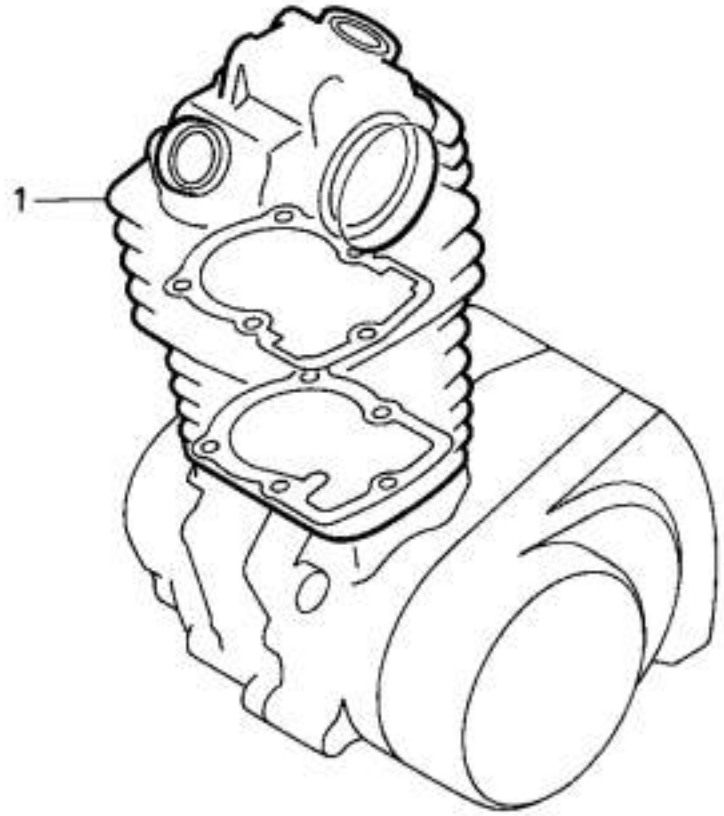

FR.

ENG1–X0001

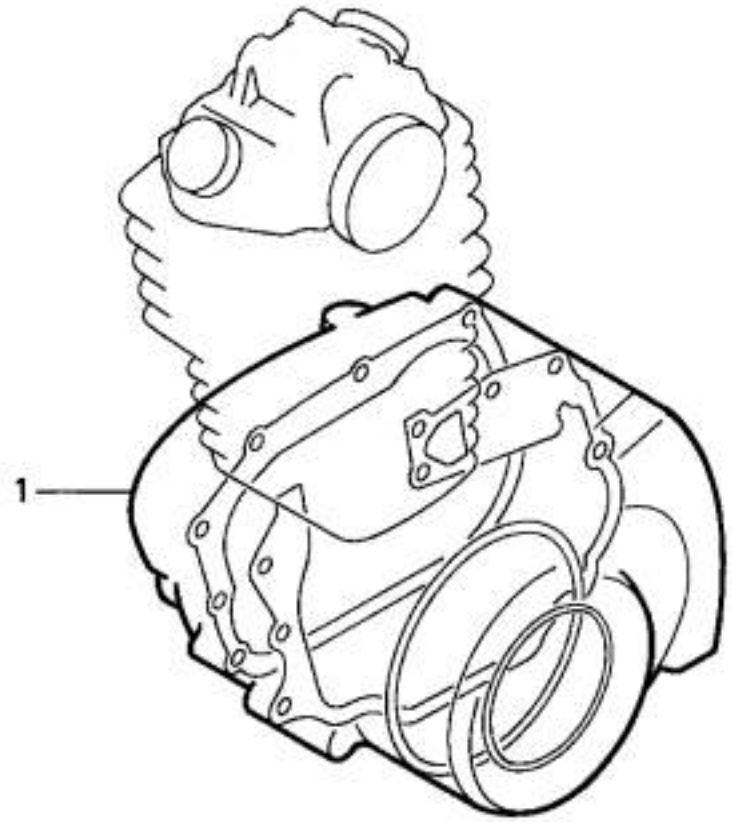

FR.

ENG2– X0001

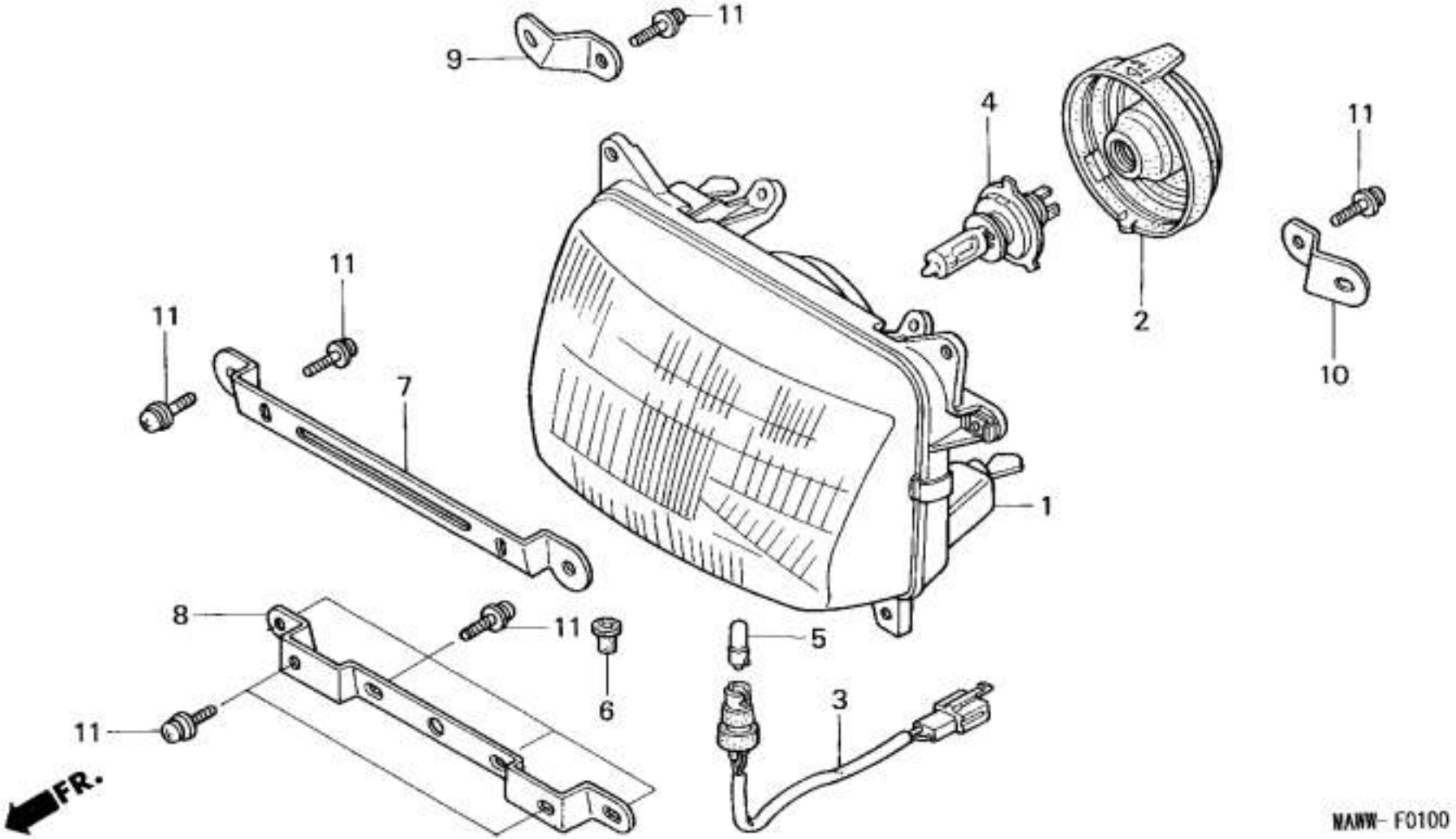
9
11
4
11
2
11
10
11
11
7
1
8
11
6
5
11
3
FR.
MAMW-F0100

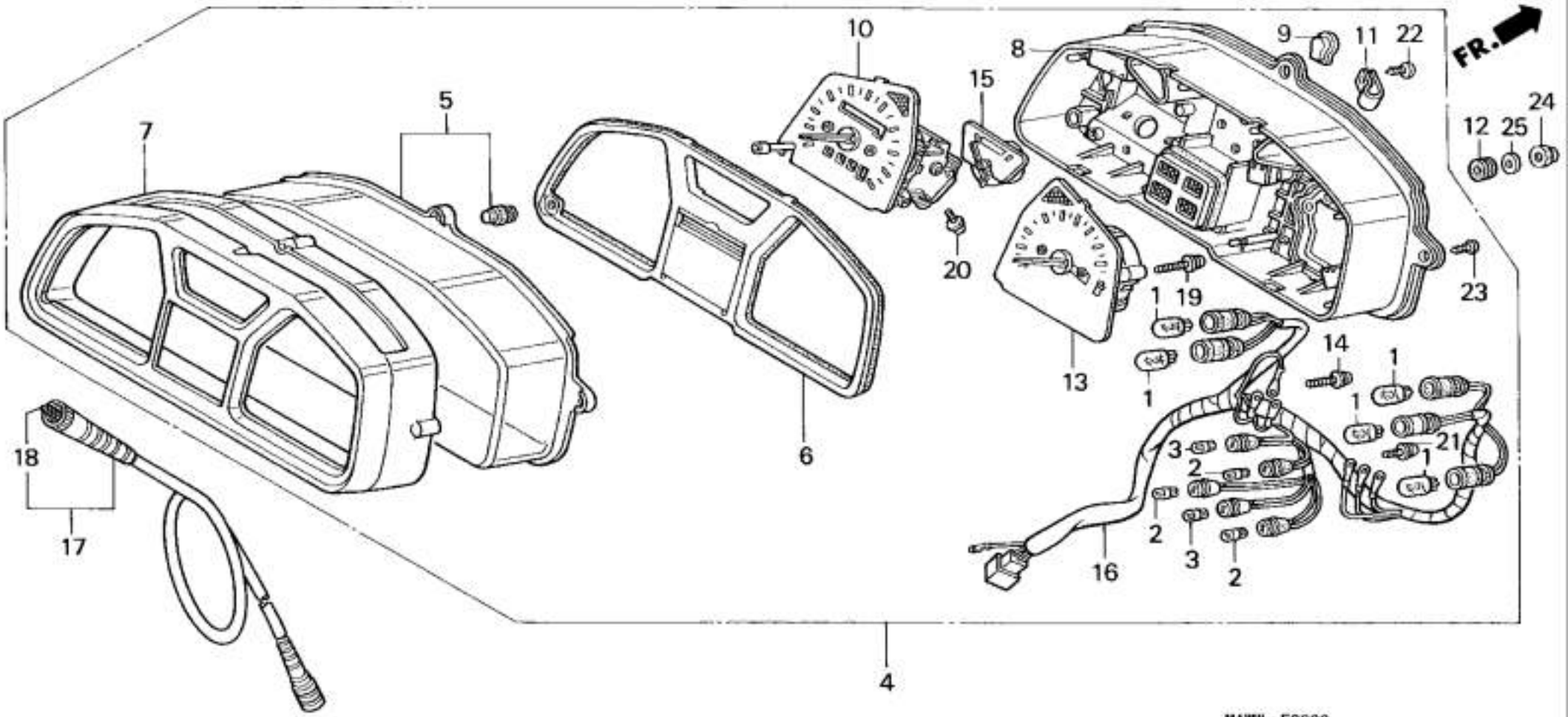
FR.
1
2
3
4
5
6
7
8
9
10
11
12
13
14
15
16
17
18
19
20
21
22
23
24
25
MAWN- F0200

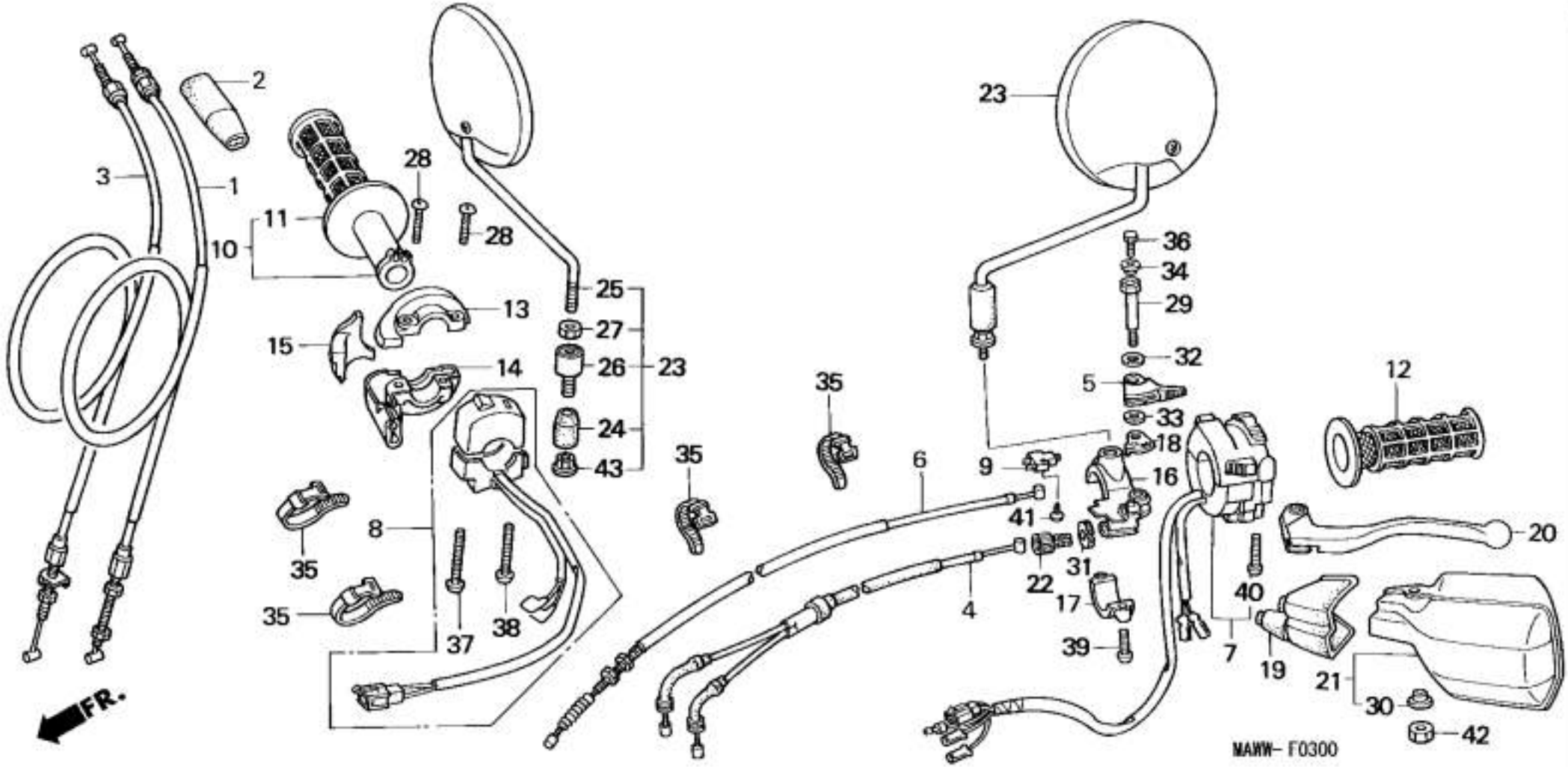
1
2
3
4
5
6
7
8
9
10
11
12
13
14
15
16
17
18
19
20
21
22
23
24
25
26
27
28
29
30
31
32
33
34
35
36
37
38
39
40
41
42
43
FR.
MAWW-F0300

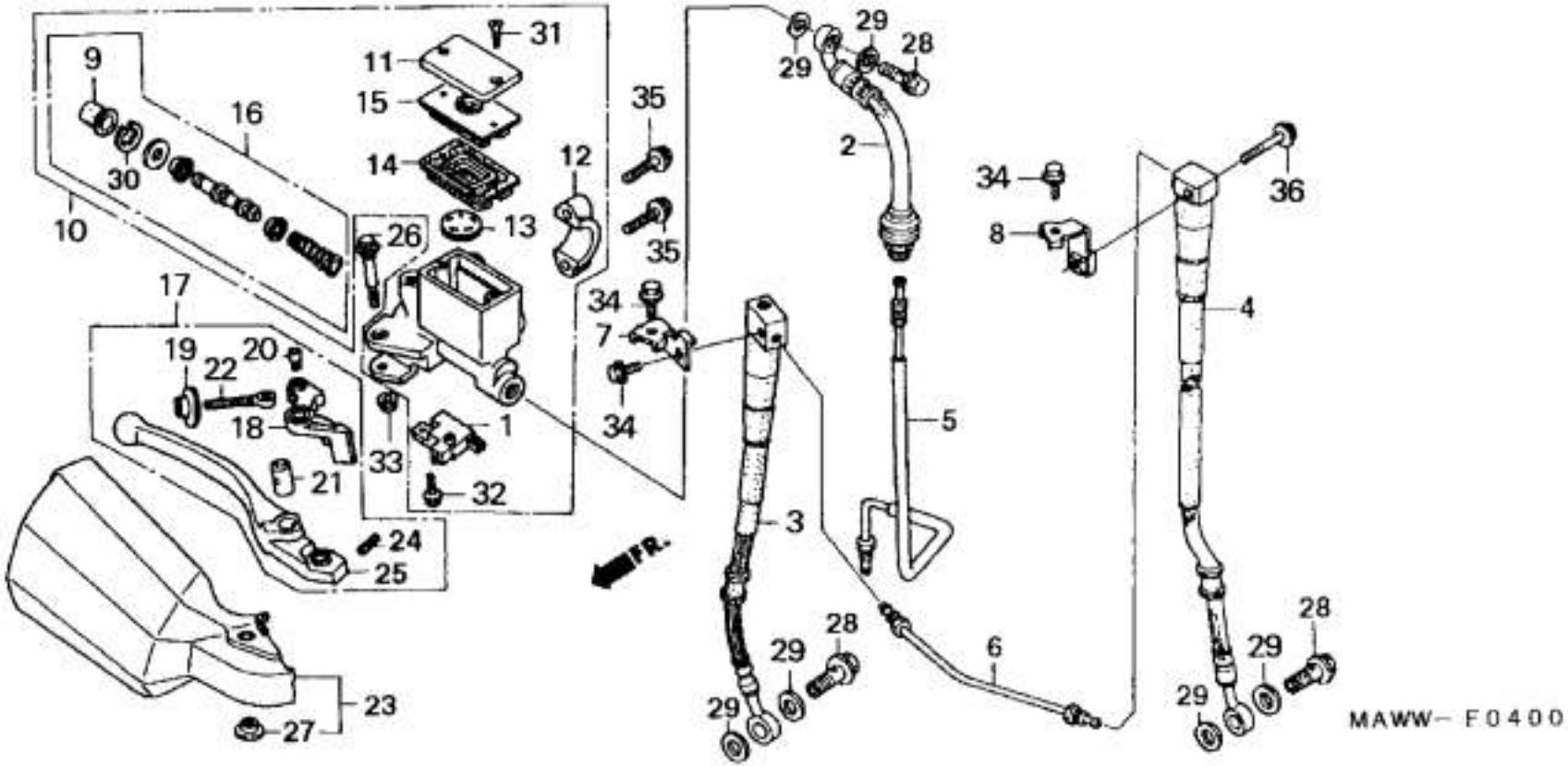
1
2
3
4
5
6
7
8
9
10
11
12
13
14
15
16
17
18
19
20
21
22
23
24
25
26
27
28
29
30
31
32
33
34
35
36
FR.
MAWW-F0400

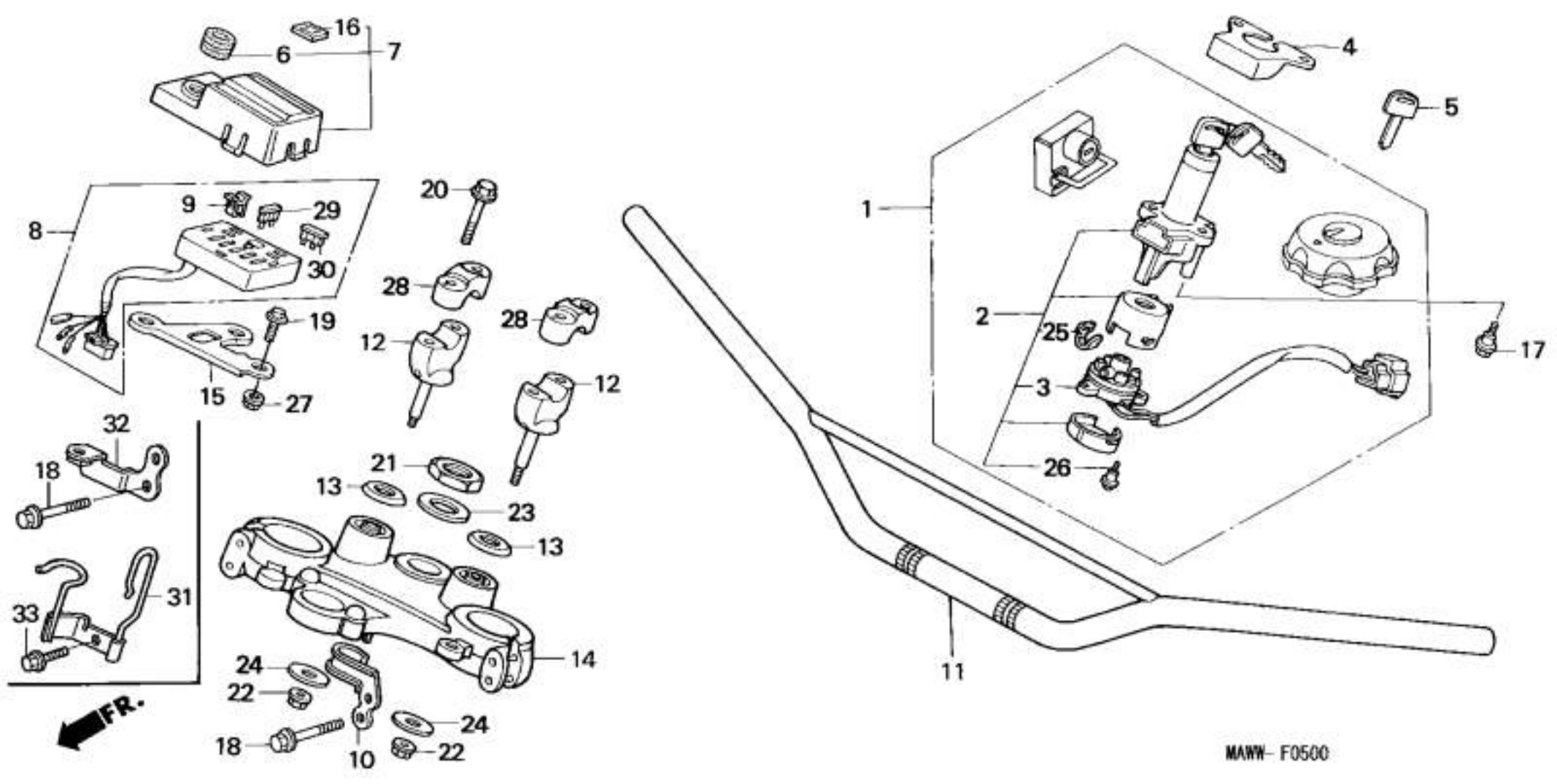
16
6
7
8
9
29
30
20
28
19
12
28
15
27
12
32
18
21
13
23
13
31
33
14
24
22
18
10
24
22
FR.
1
4
5
2
25
17
3
26
11
MAWW- F0500

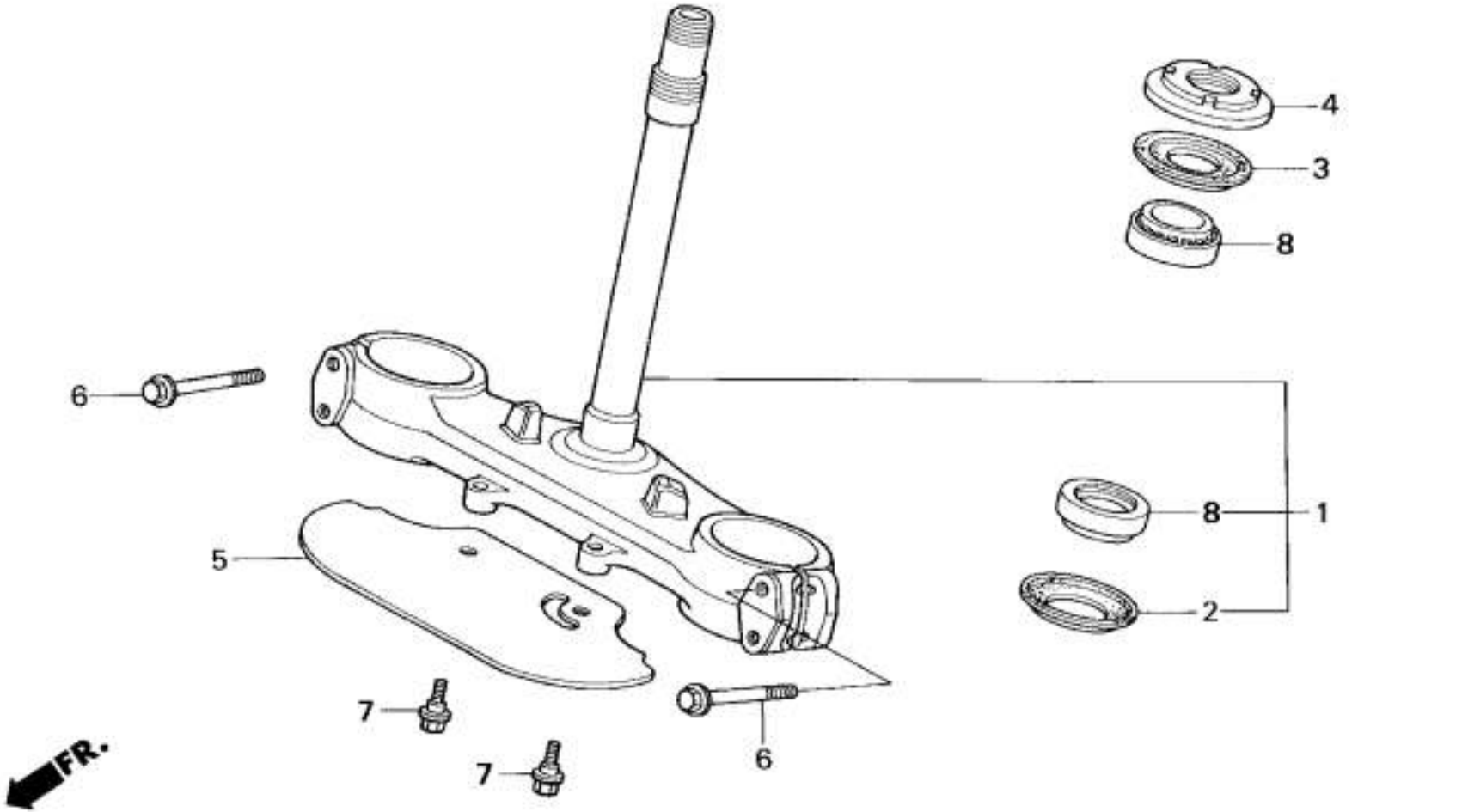
4
3
8
6
8
1
5
2
7
6
7
FR.
MAWW- F0600 A

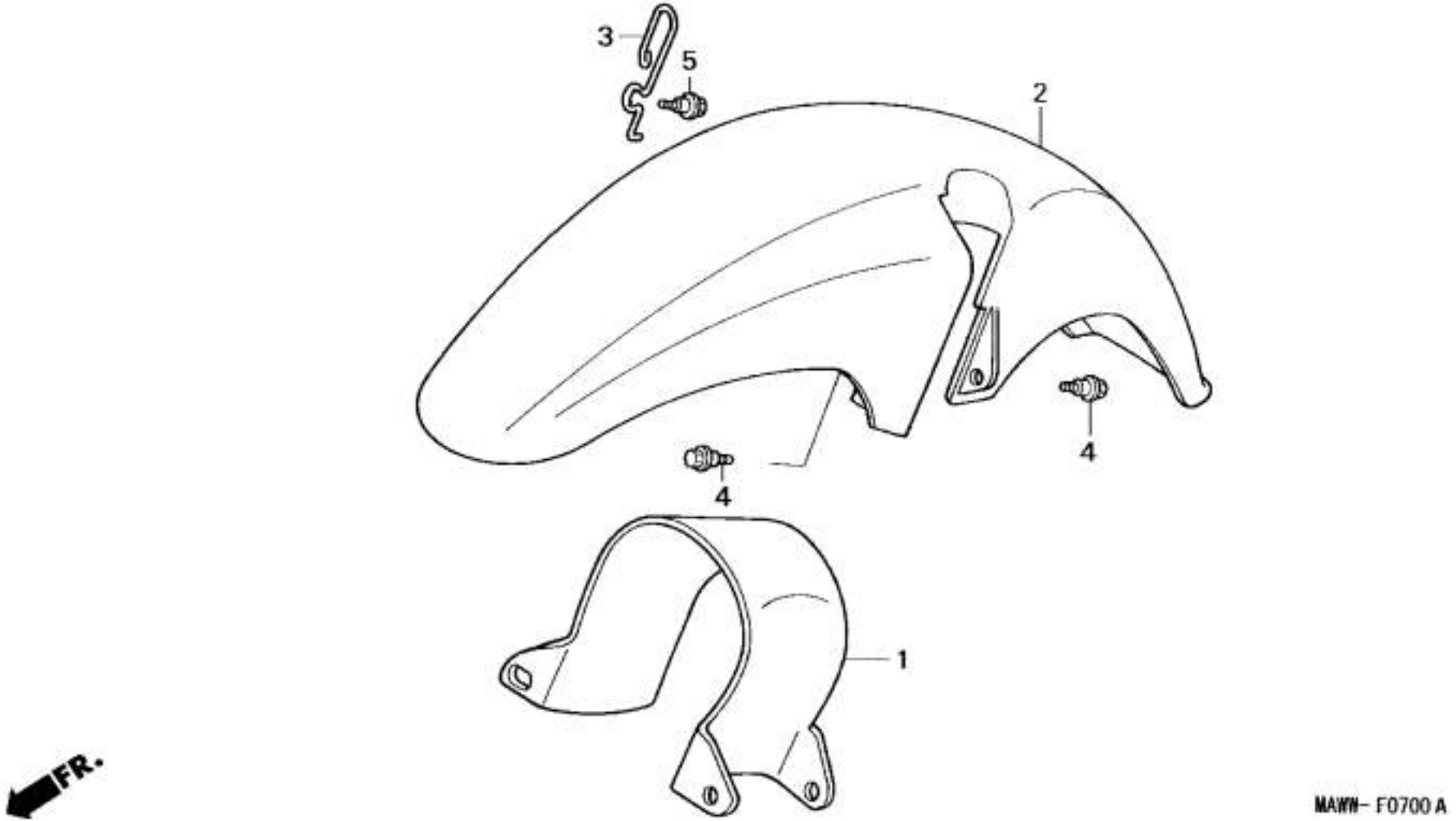
3
5
2
4
4
1
FR.
MAWN- F0700 A

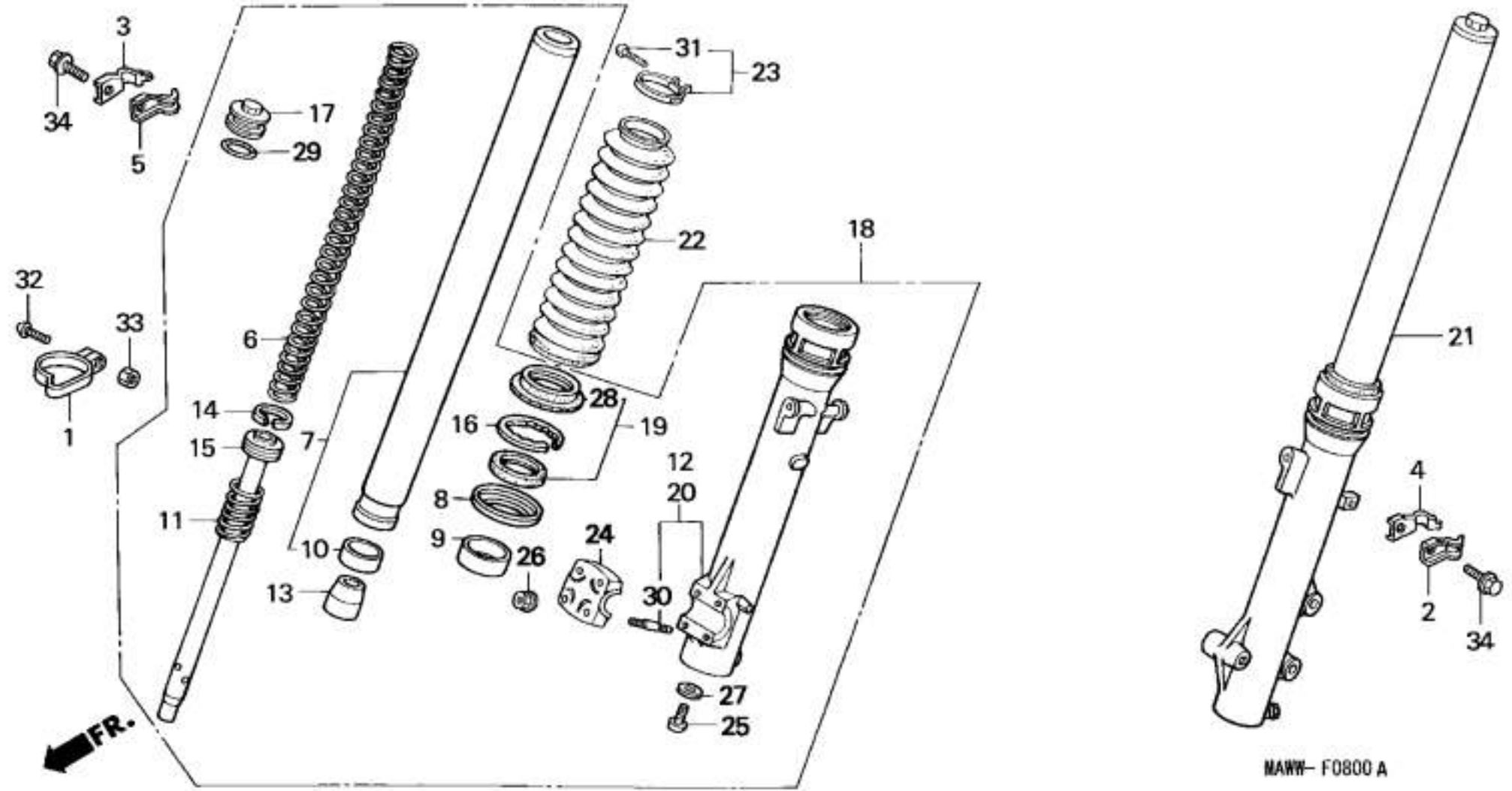
3
34
5
17
29
31
23
22
18
32
33
6
1
14
15
7
28
16
19
12
20
8
11
10
9
26
24
13
30
27
25
FR.
21
4
2
34
MAWW- F0800 A

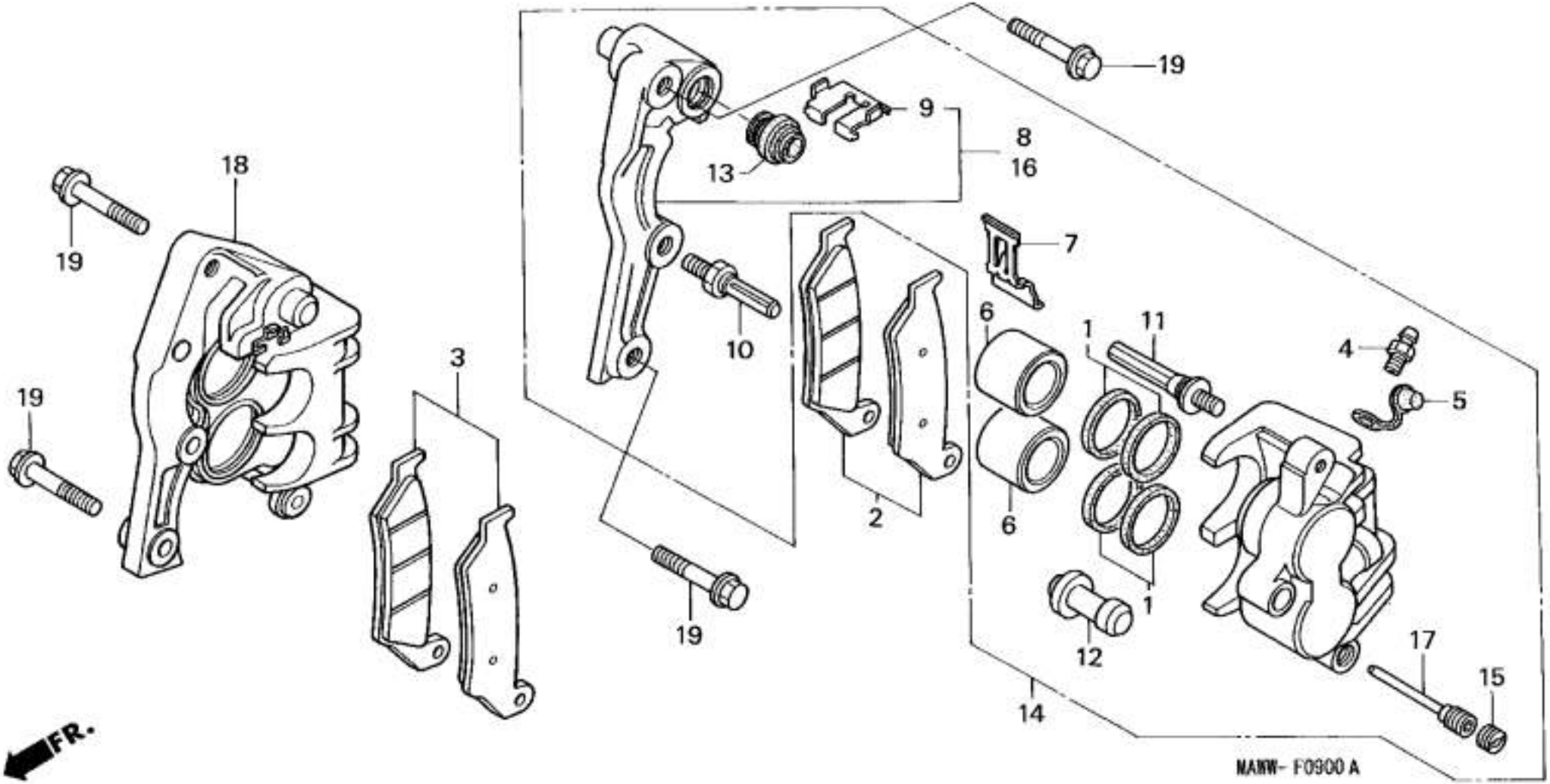

19
9
8
16
13
18
19
7
10
6
1
11
4
5
3
19
2
6
1
19
12
17
15
14
FR.
MAWW- F0900 A

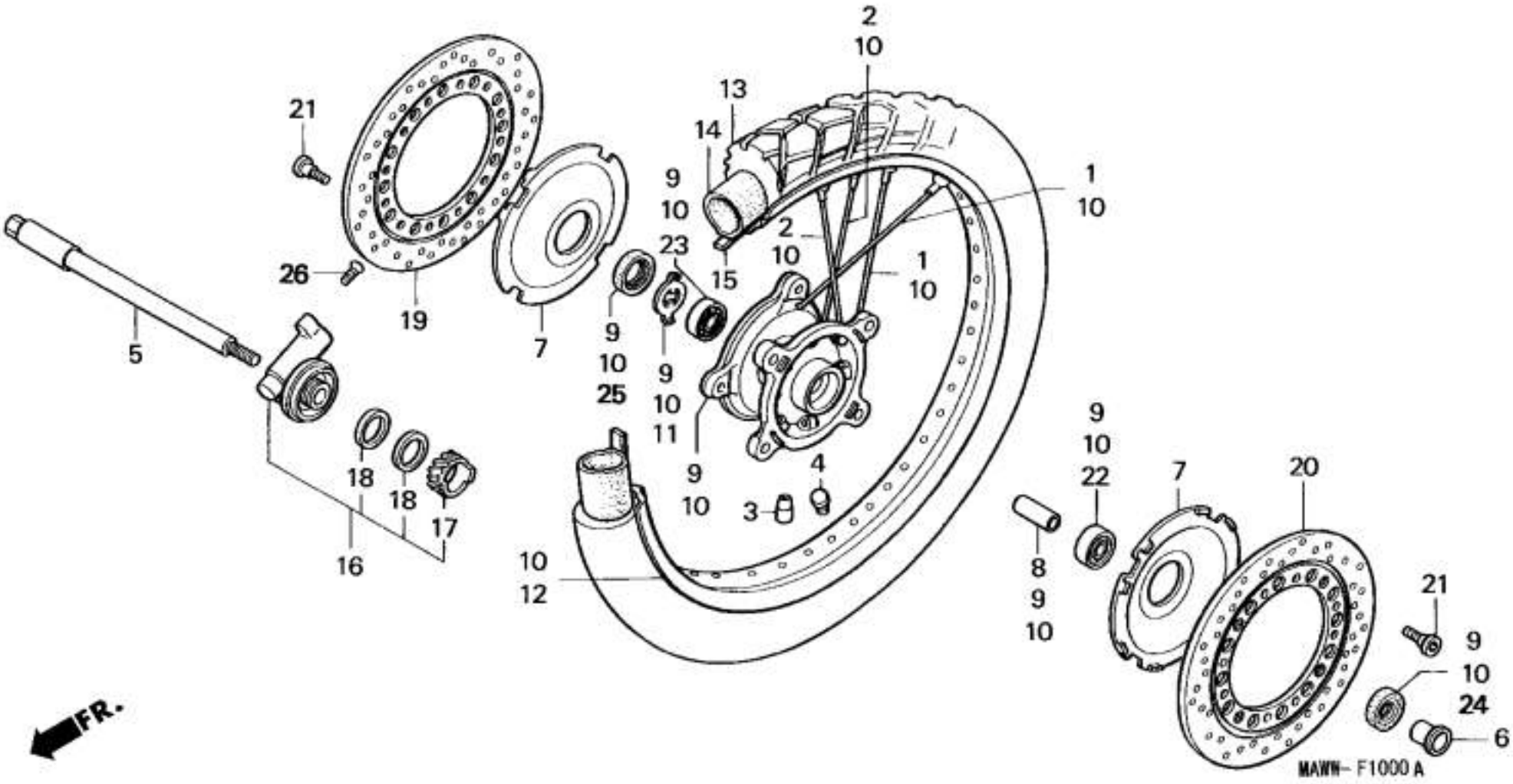

2
10
13
14
21
9
10
1
10
2
10
23
15
1
10
26
19
7
9
10
25
9
10
11
5
9
10
22
7
20
18
18
17
16
9
10
4
3
10
12
8
9
10
21
9
10
24
6
FR.
MAWN- F1000 A

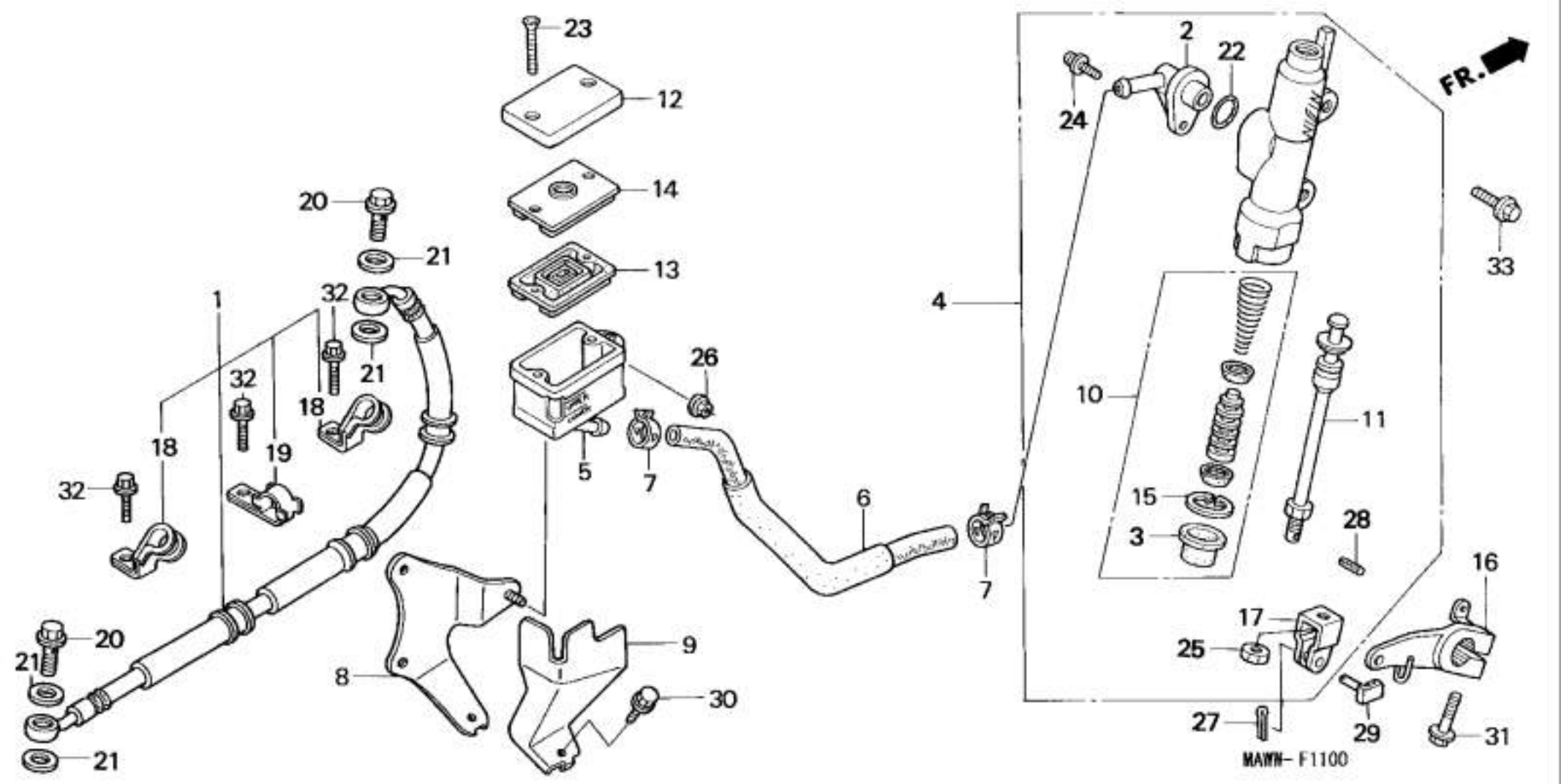
FR.
1
2
3
4
5
6
7
8
9
10
11
12
13
14
15
16
17
18
19
20
21
22
23
24
25
26
27
28
29
30
31
32
33
MAWN-F1100

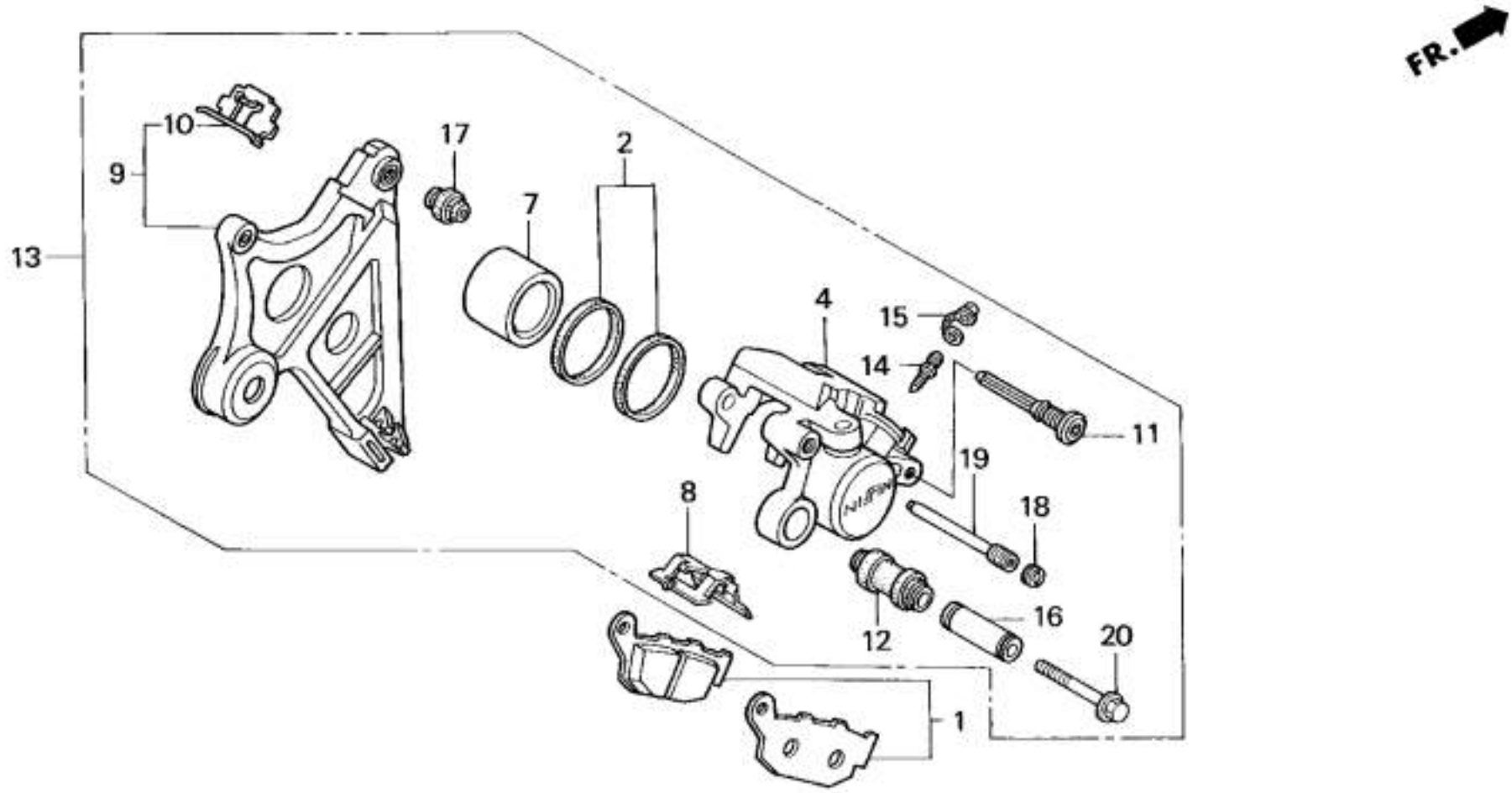
FR.
10
9
13
17
7
2
4
15
14
11
19
18
8
12
16
20
1
NISSIN
MAHW-F1200A

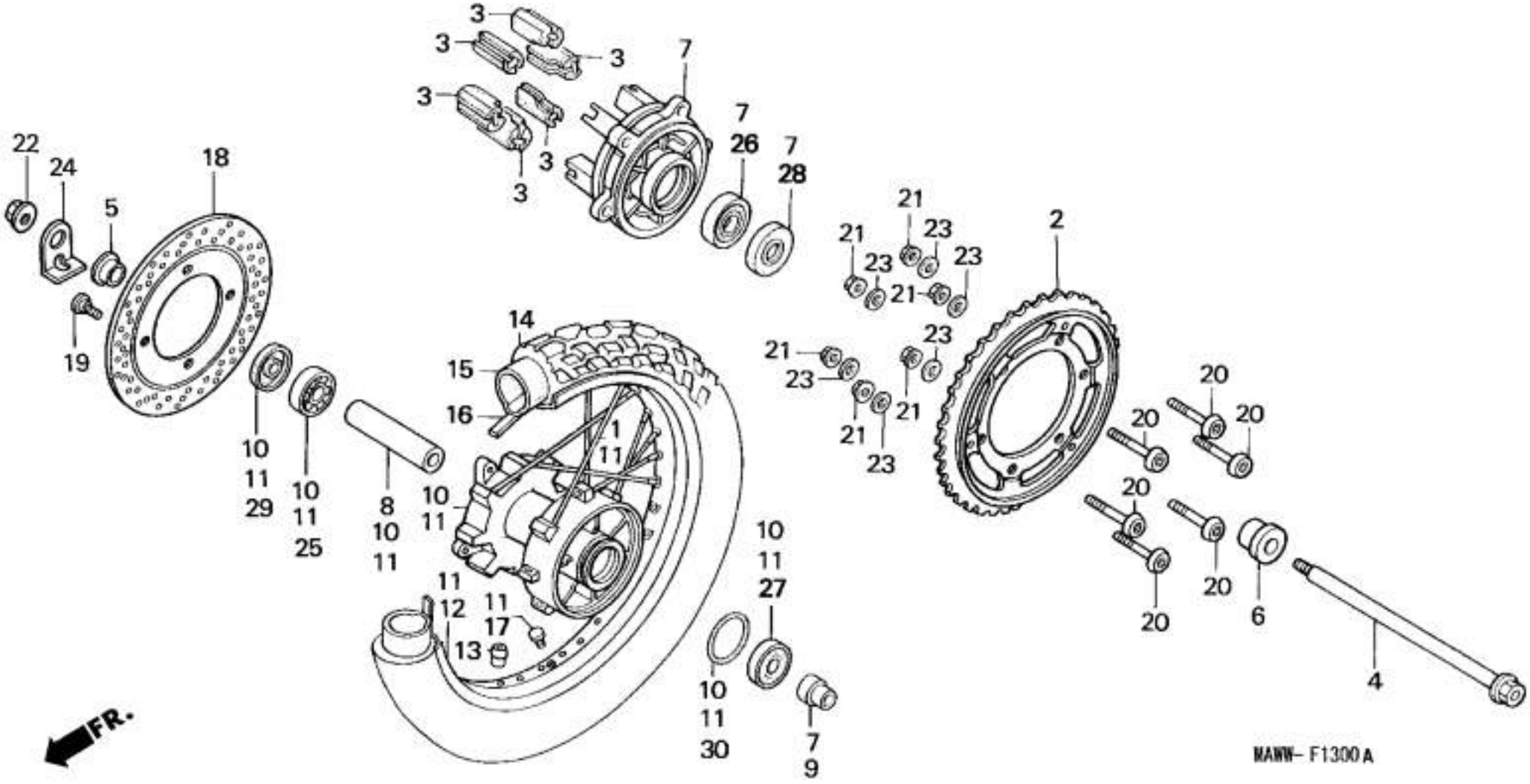

3
3
3
3
3
3
7
7
26
7
28
22
24
18
5
19
21
23
21
23
23
21
2
14
15
16
1
11
21
23
23
21
21
23
20
20
20
20
20
20
6
4
10
11
29
10
11
25
8
10
11
10
11
11
12
11
17
13
10
11
27
10
11
30
7
9
FR.
MAWW- F1300 A

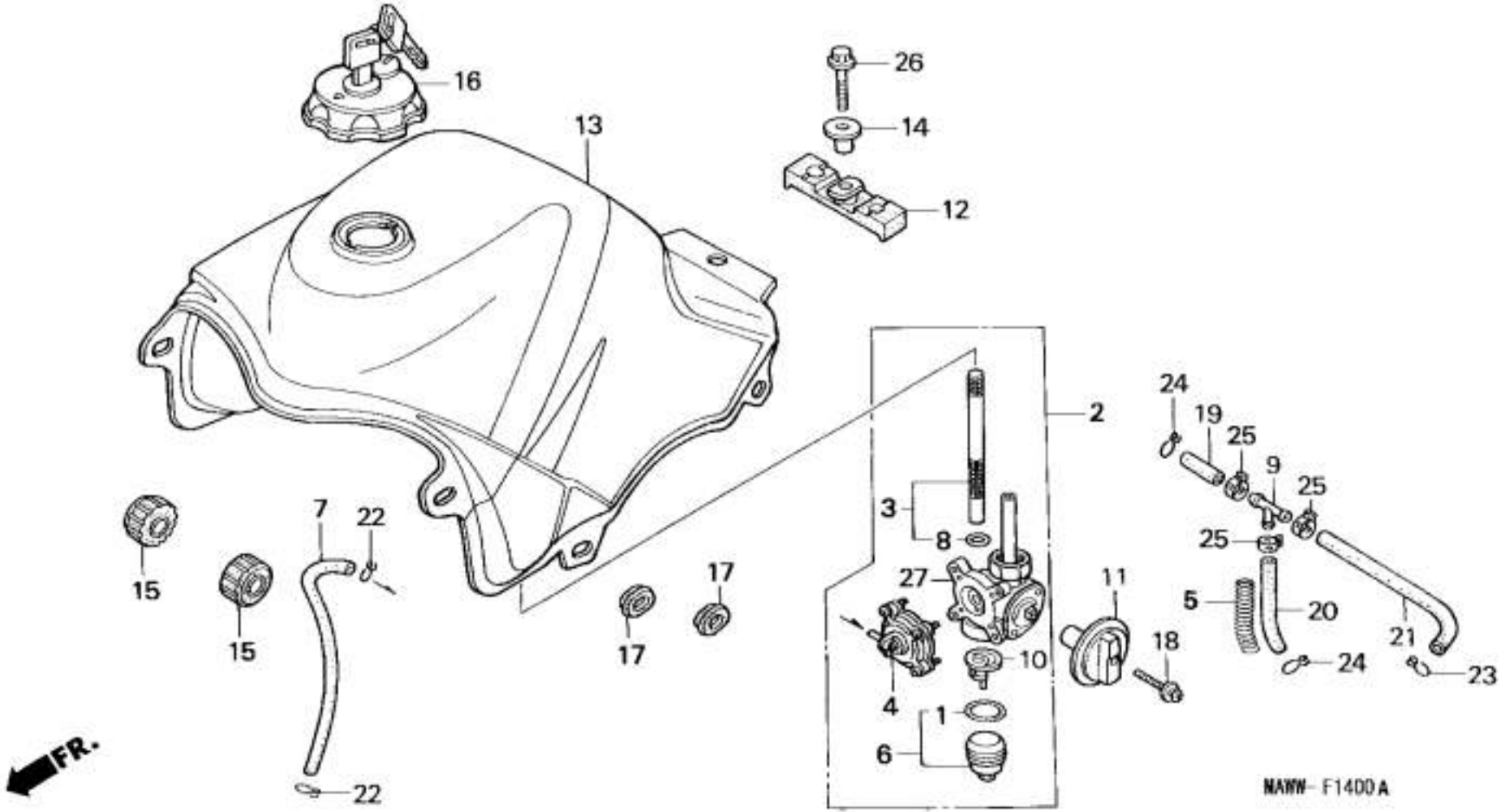
16
13
26
14
12
2
24
19
25
9
25
25
3
8
27
11
5
20
21
15
15
7
22
17
17
10
18
4
1
6
24
23
22
FR.
MAMW- F1400A

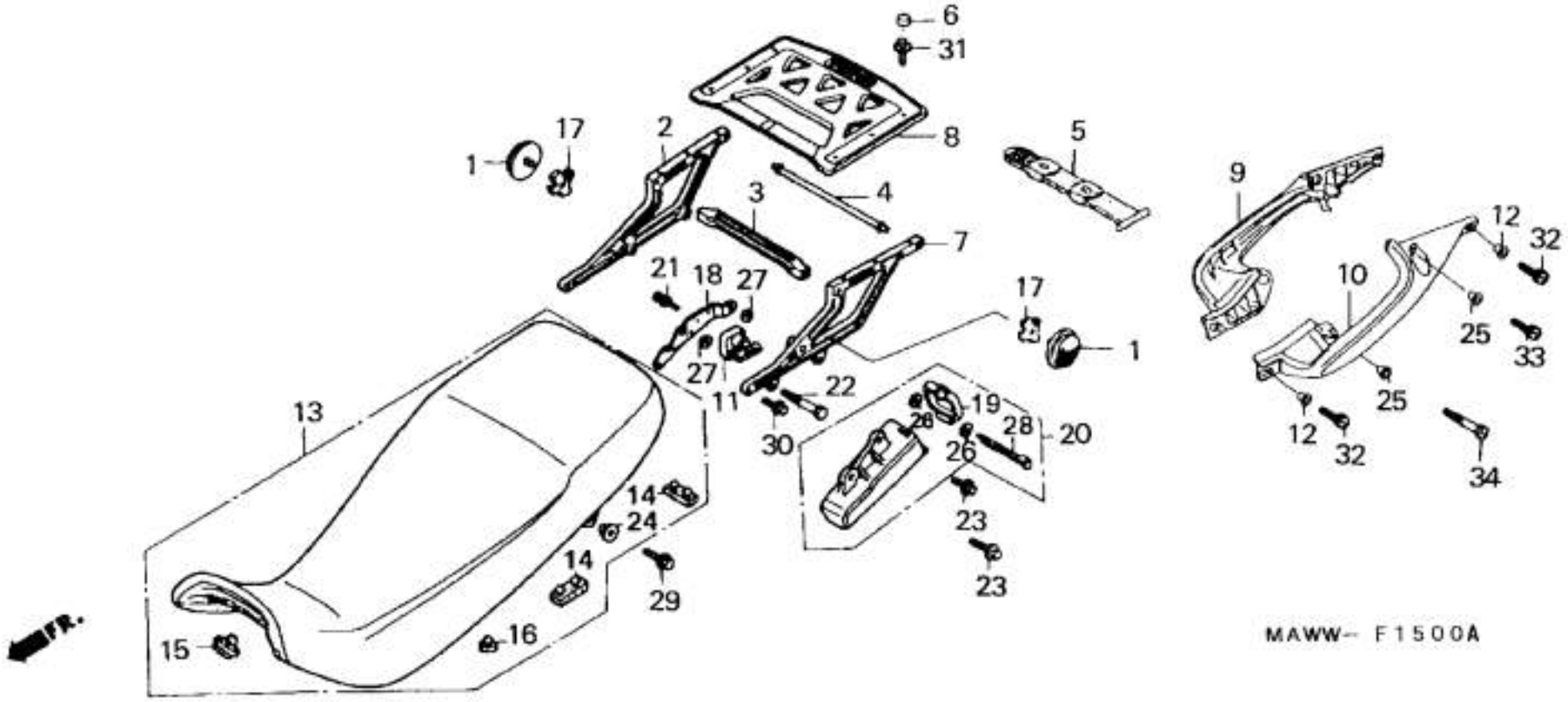

6
31
8
5
17
2
1
3
4
9
7
12
32
21
18
27
17
10
1
25
33
27
11
22
25
13
19
28
20
12
32
30
26
34
14
24
23
14
23
29
FR.
15
16
MAWW- F1500A

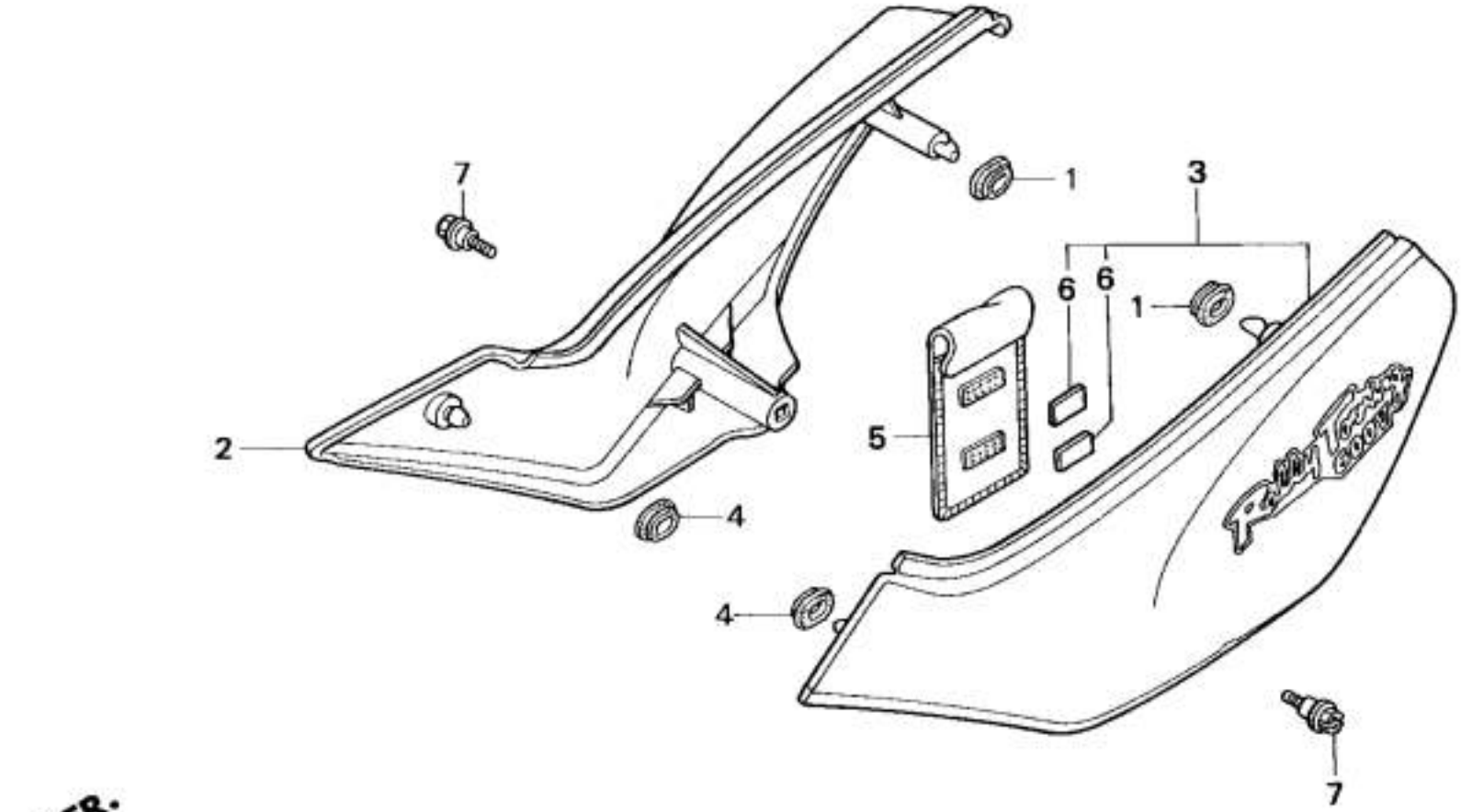

MAWW- F1600

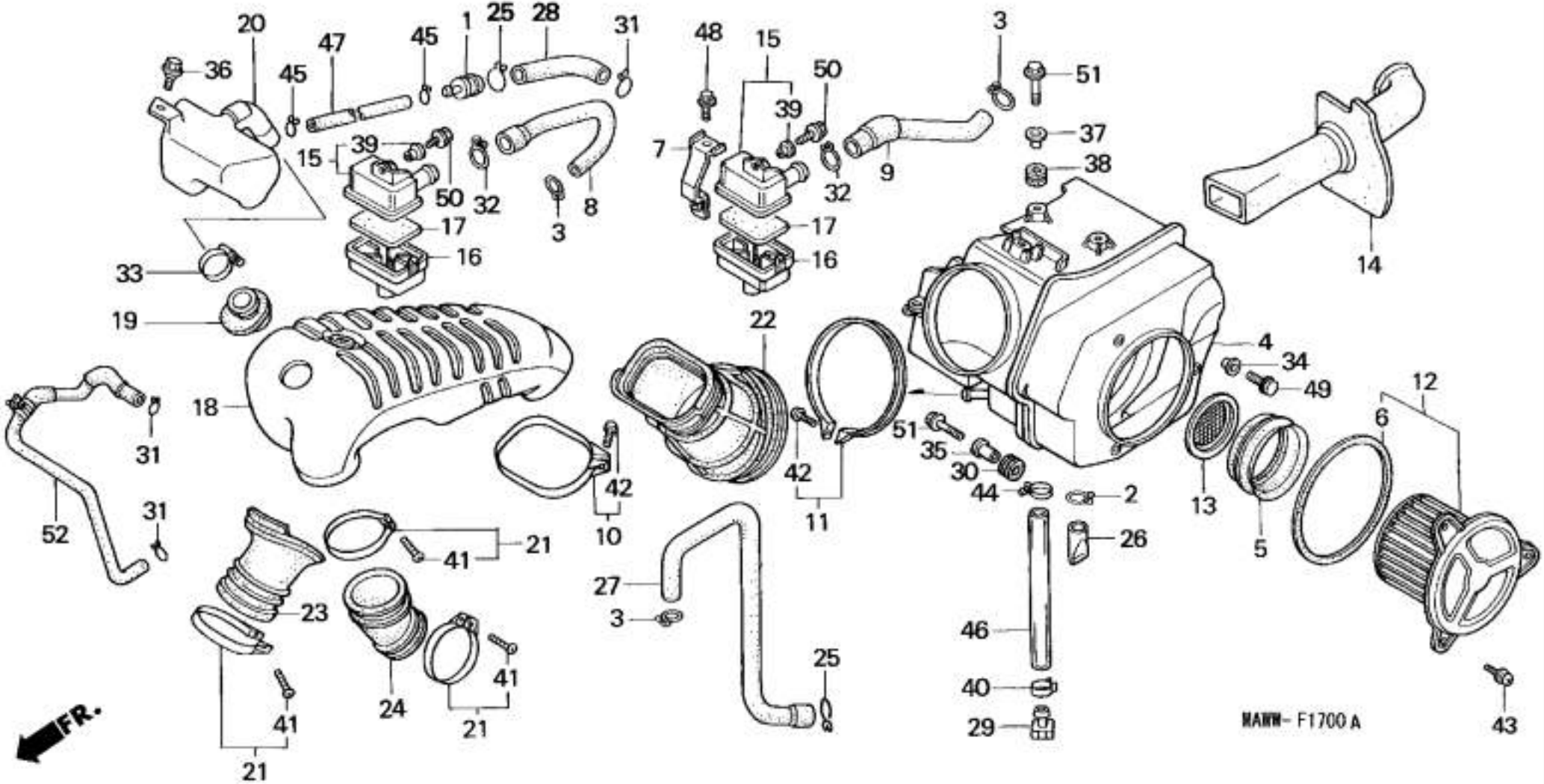

20
36
45
47
45
1
25
28
31
48
15
50
39
3
51
37
38
39
15
50
32
8
3
7
32
9
17
16
17
16
14
33
19
22
4
34
49
12
6
18
31
51
35
30
44
2
13
5
42
42
10
11
52
31
21
41
26
27
3
23
46
25
24
41
41
21
40
29
43
21
FR.
MAWW- F1700 A

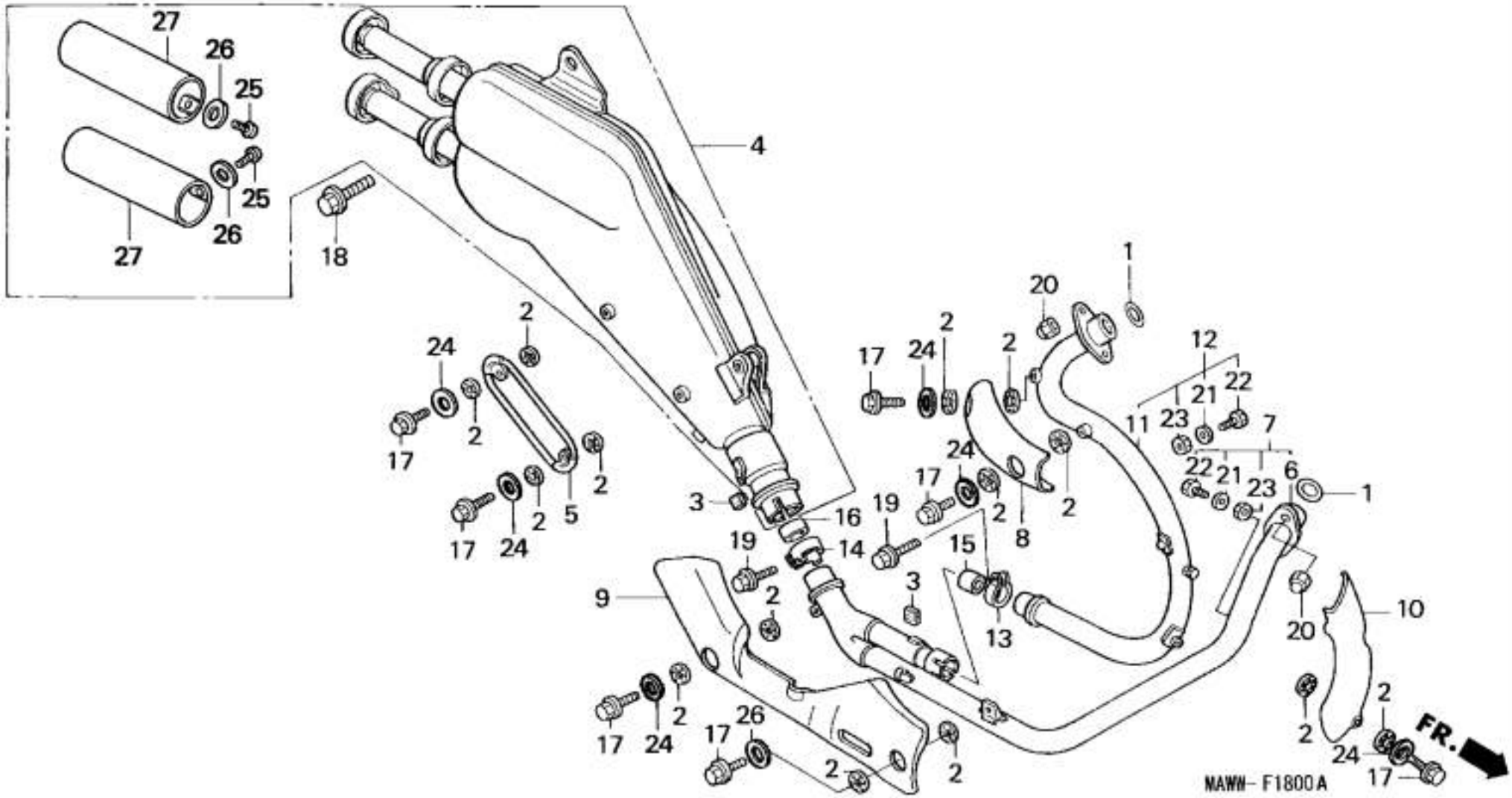

27
26
25
25
26
27
18
4
1
20
2
24
2
17
24
2
2
12
21
22
23
11
7
17
2
2
5
2
24
17
24
17
2
8
2
22
21
23
6
1
3
16
19
14
15
19
3
9
2
13
20
10
2
17
24
2
17
26
2
2
2
24
17
FR.
MAWW- F1800A

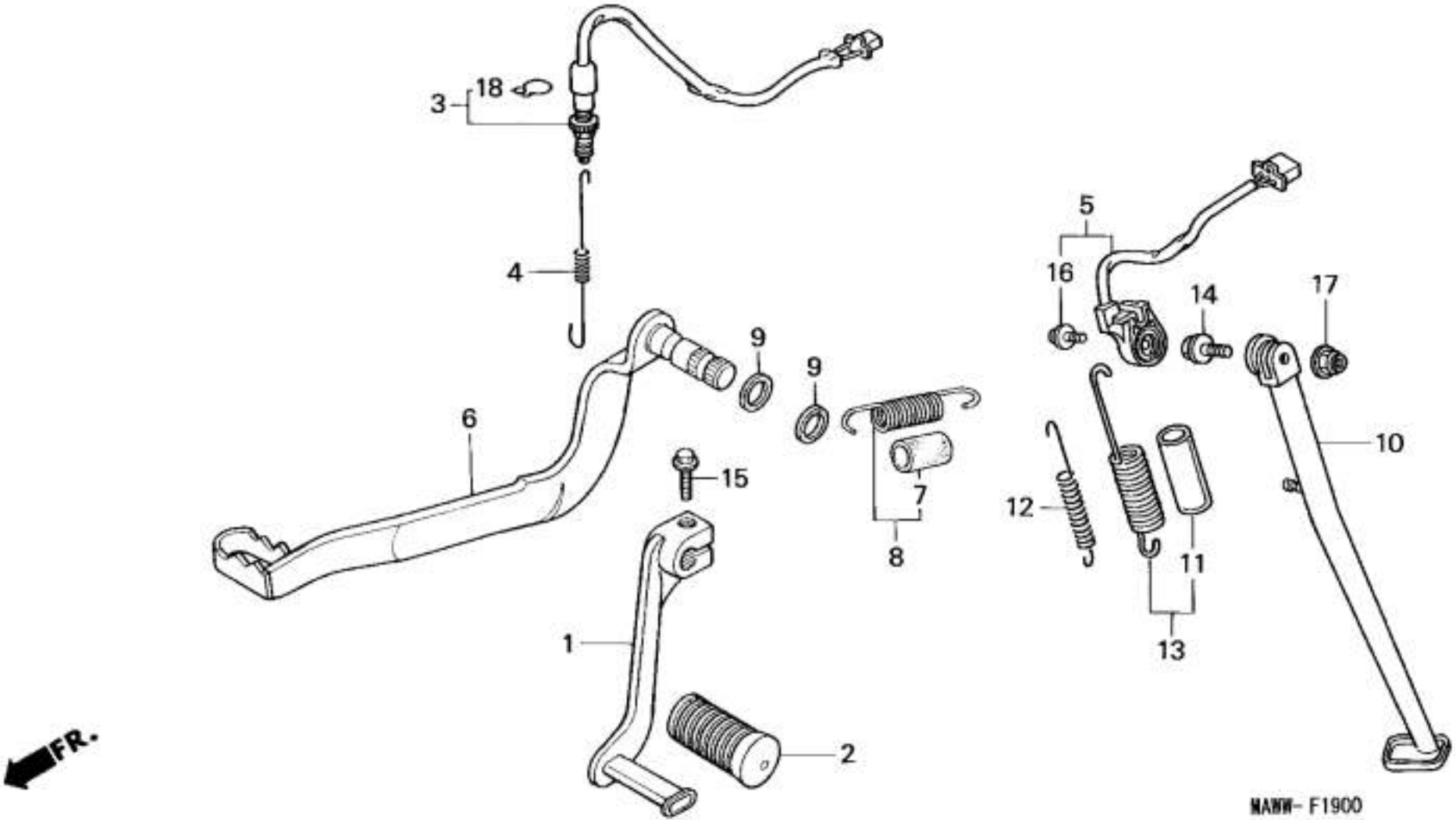
3
18
4
9
9
6
15
7
8
1
2
5
16
14
17
10
12
11
13
FR.
NAMW-F1900

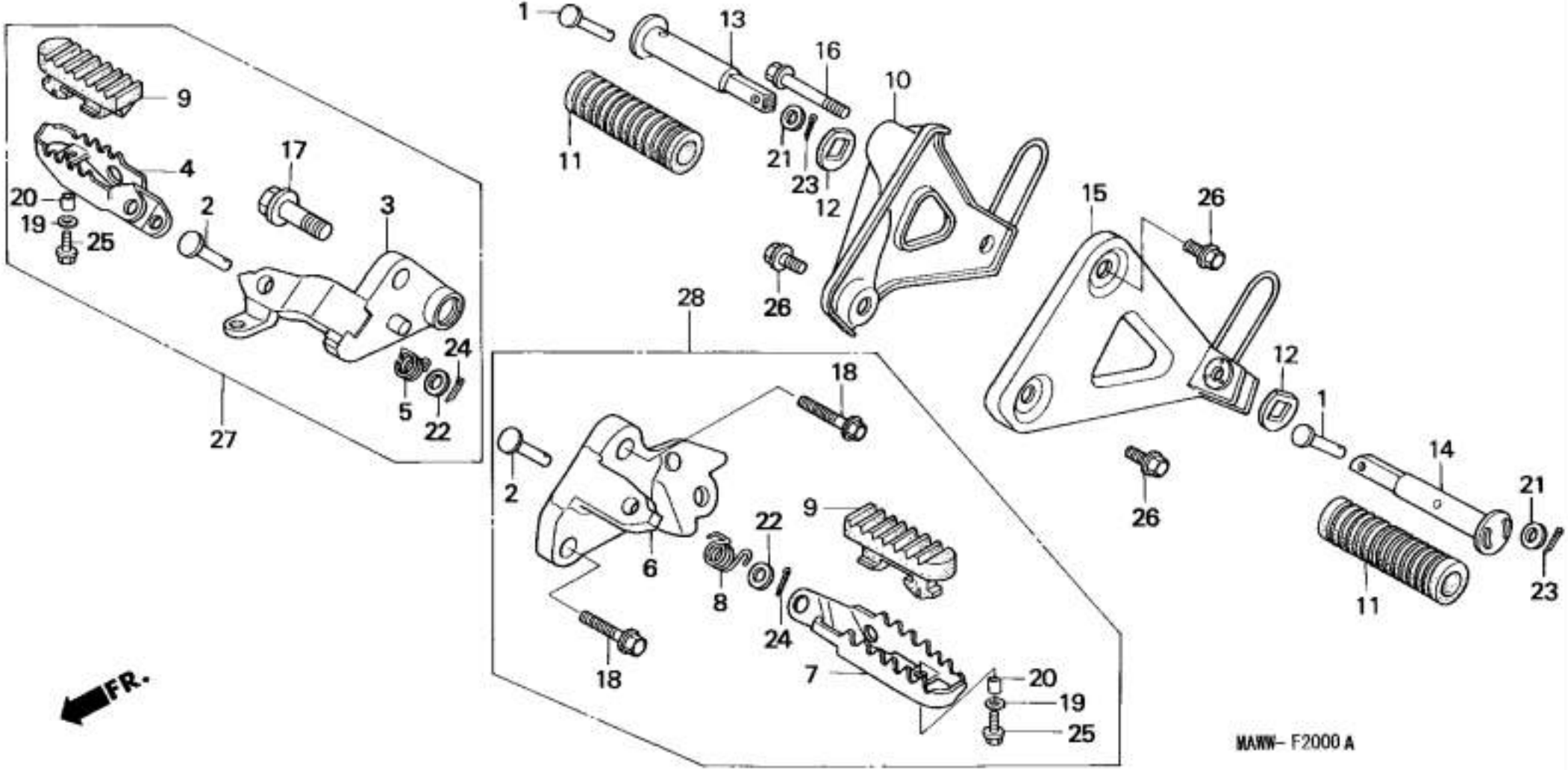

1
13
16
10
9
4
17
20
19
25
2
3
11
21
23
12
15
26
28
26
24
5
22
27
18
12
1
14
21
2
9
22
6
8
24
26
11
23
18
7
20
19
25
FR.
MAWW- F2000 A

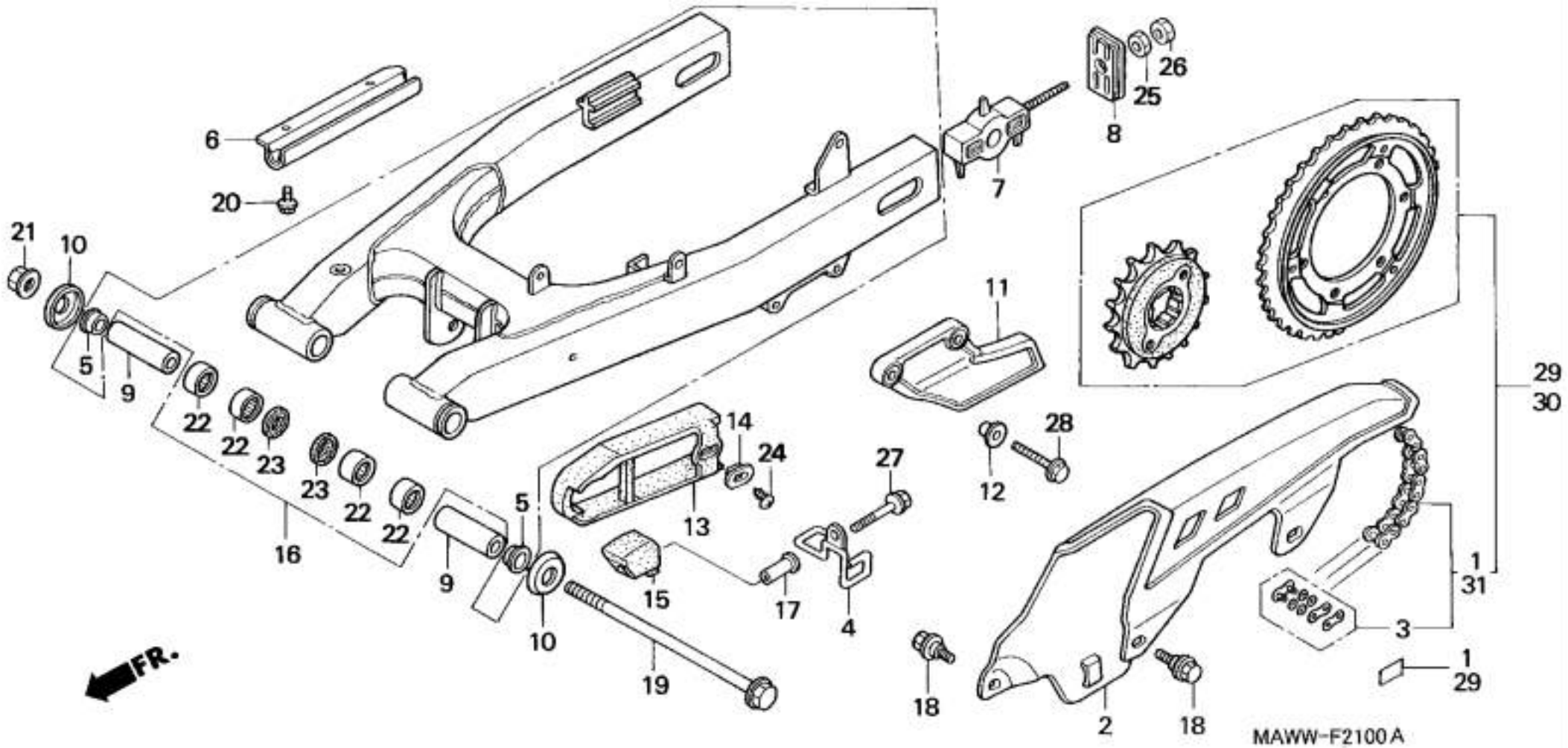

6
20
21
10
5
9
22
22
23
23
22
22
16
9
5
10
19
14
24
13
15
17
4
27
11
12
28
7
8
25
26
29
30
1
31
3
1
29
18
2
18
FR.
MAWW-F2100A

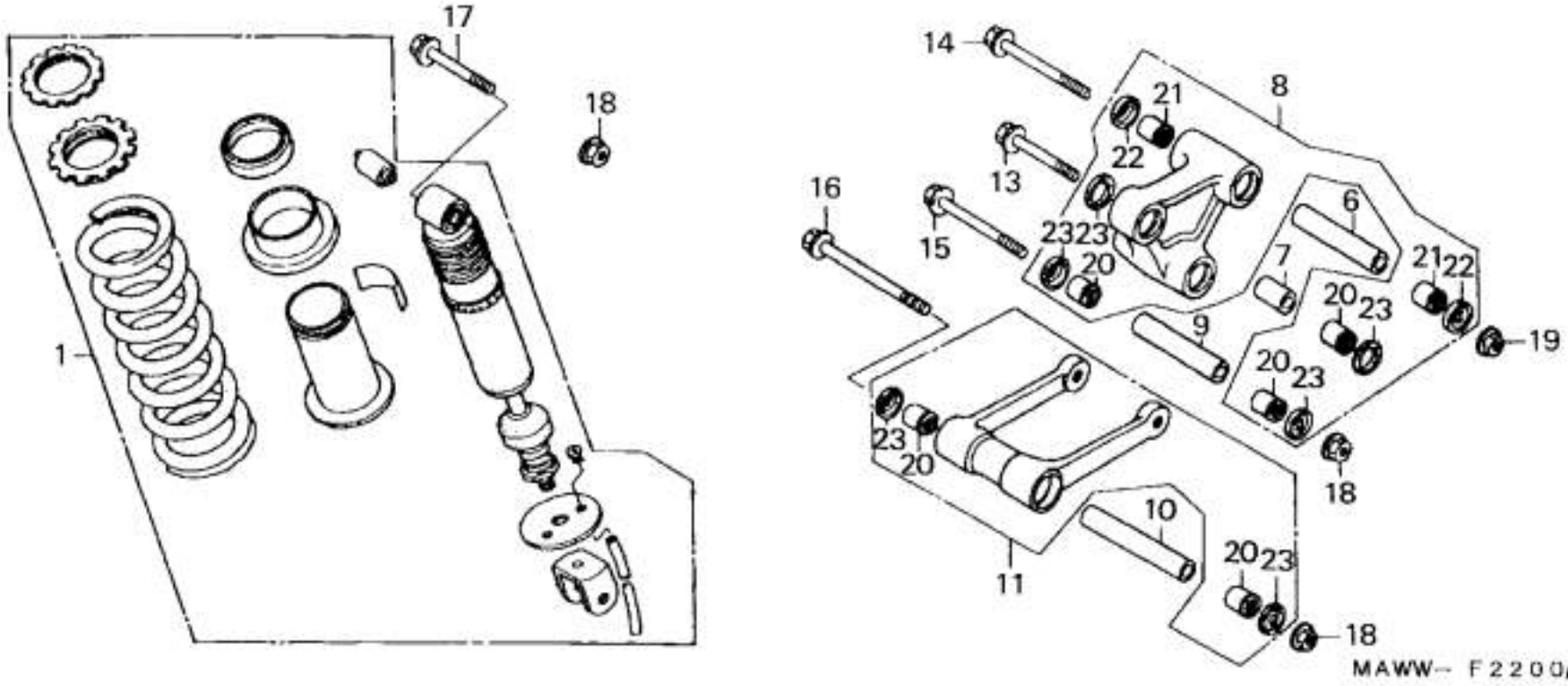
17
18
1
14
21
8
22
13
16
6
15
23
23
20
7
21
22
20
23
9
19
20
23
23
20
18
10
11
20
23
18
MAWW- F2200A

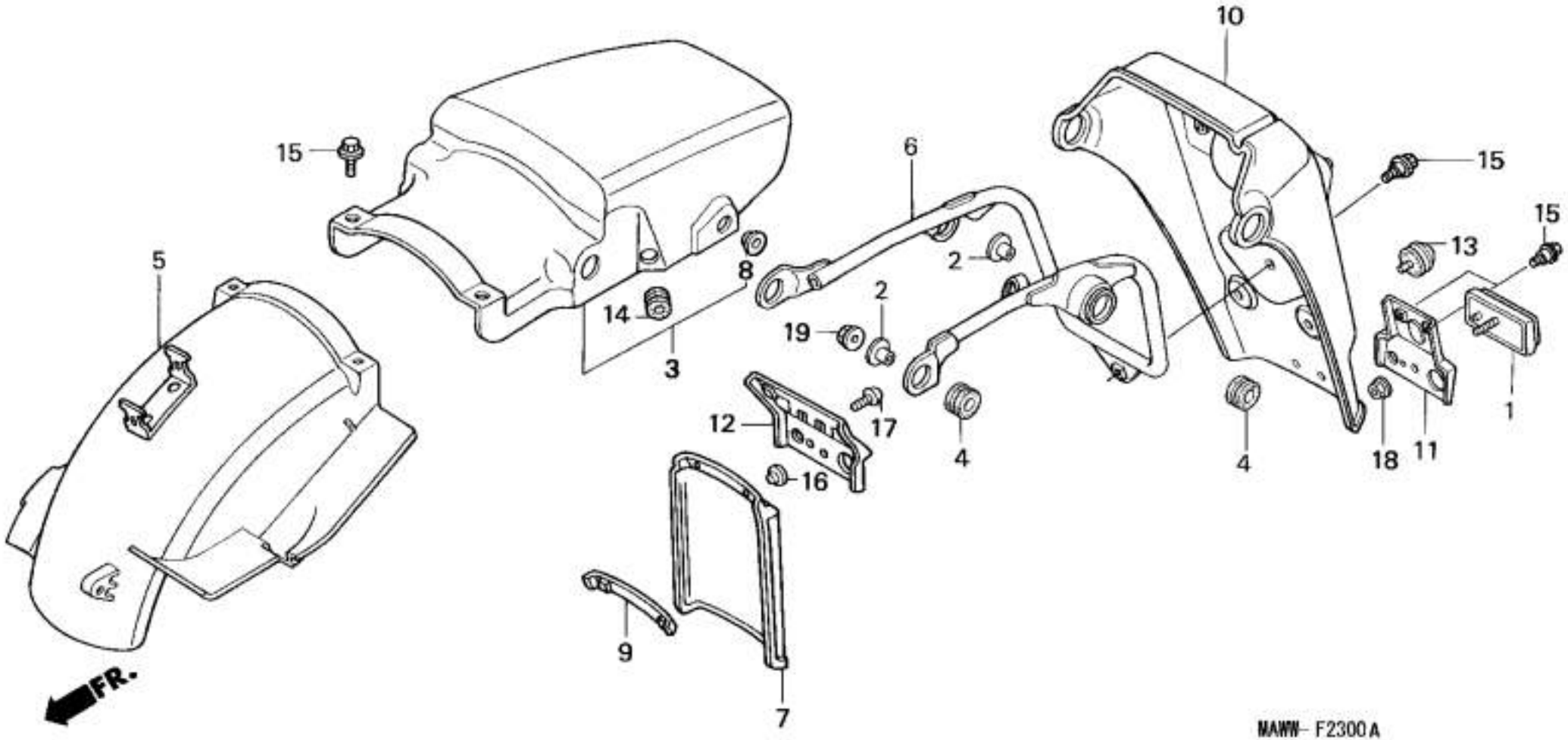

10
15
6
15
15
13
5
8
2
2
14
19
3
12
17
4
4
18
11
1
16
9
7
FR.
MAWW- F2300 A

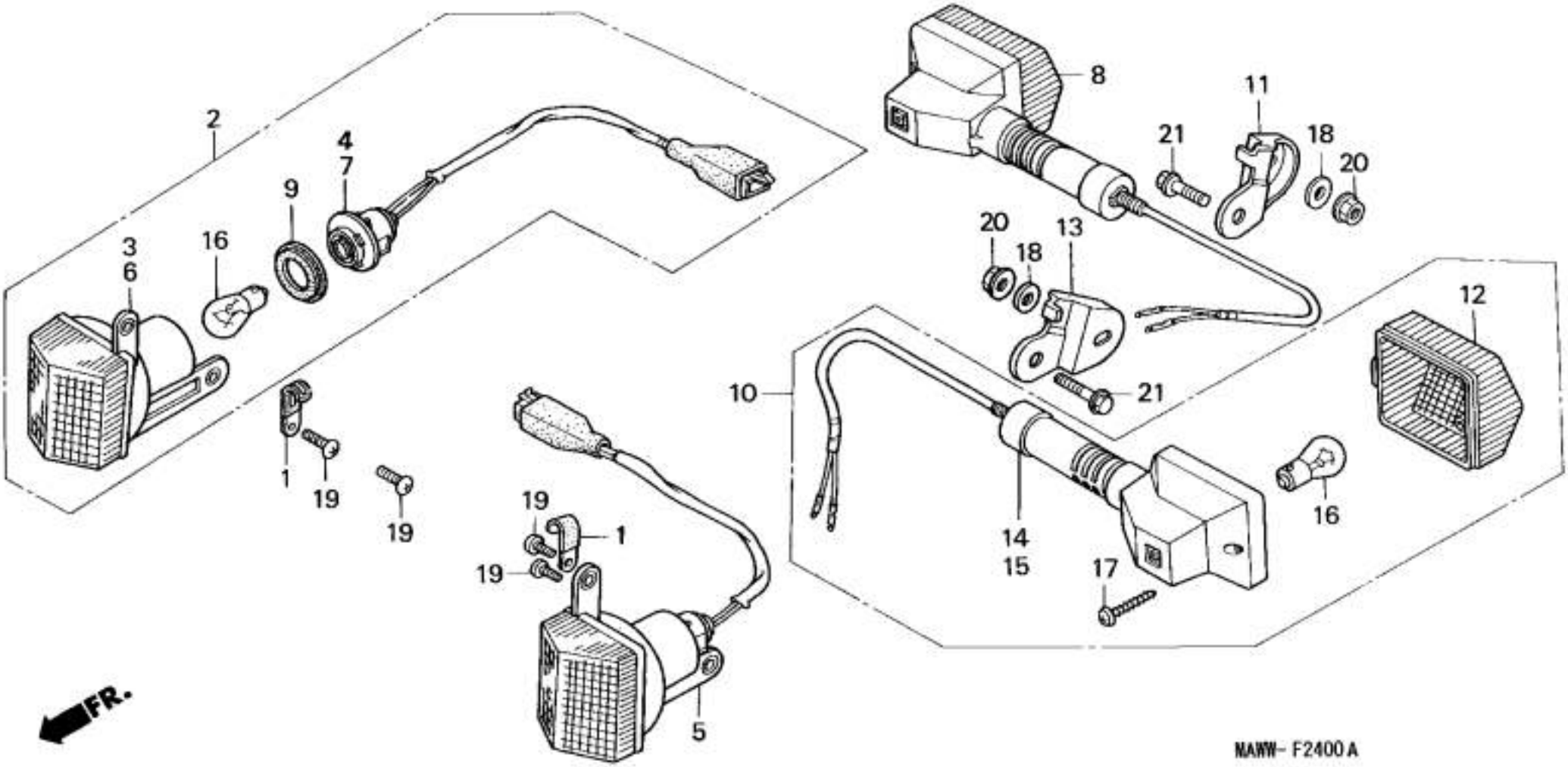
2
3
6
16
9
4
7
1
19
19
19
19
1
5
8
11
21
18
20
20
18
13
21
10
12
14
15
17
16
FR.
NAWW- F2400 A

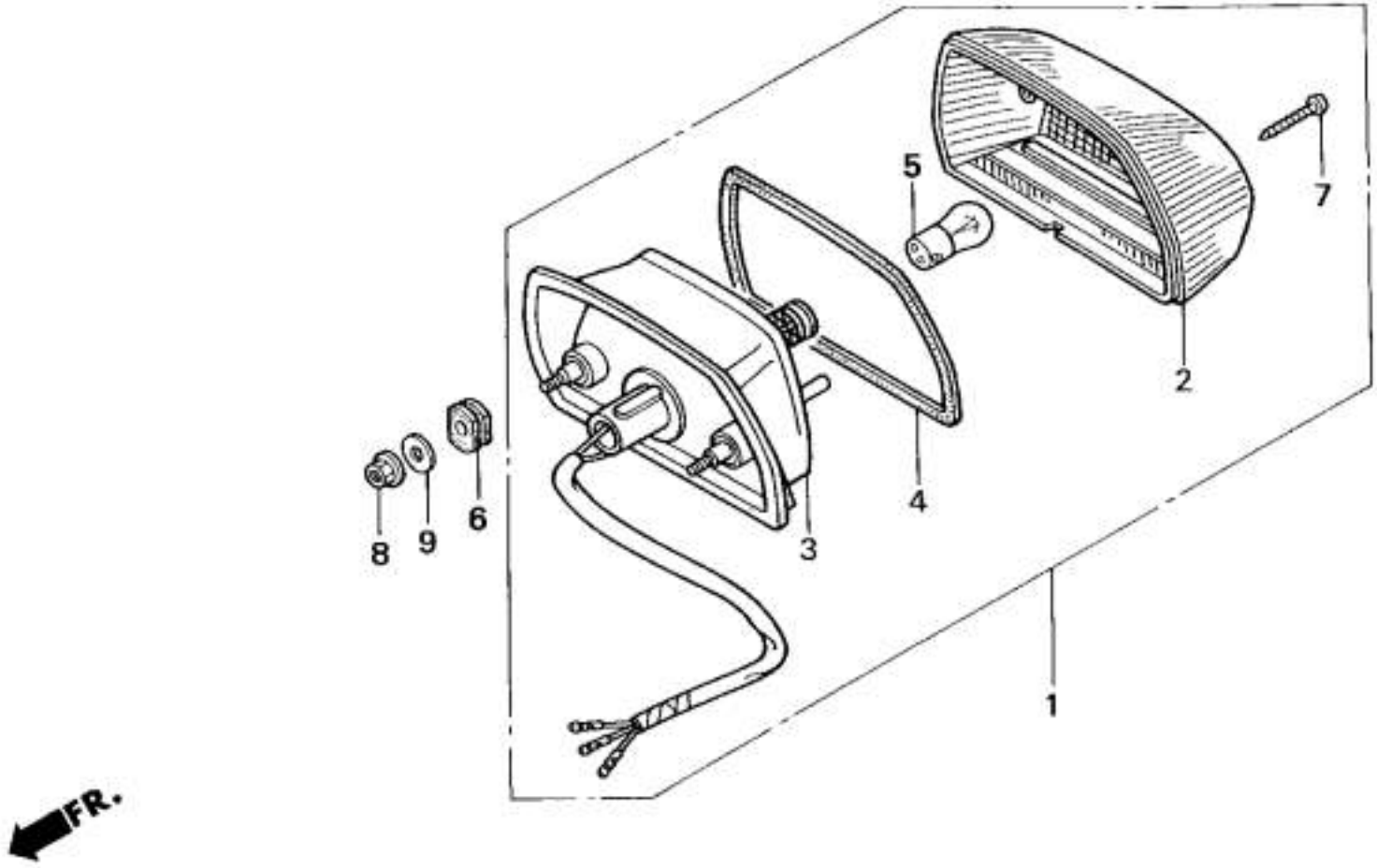

MAWW- F2500

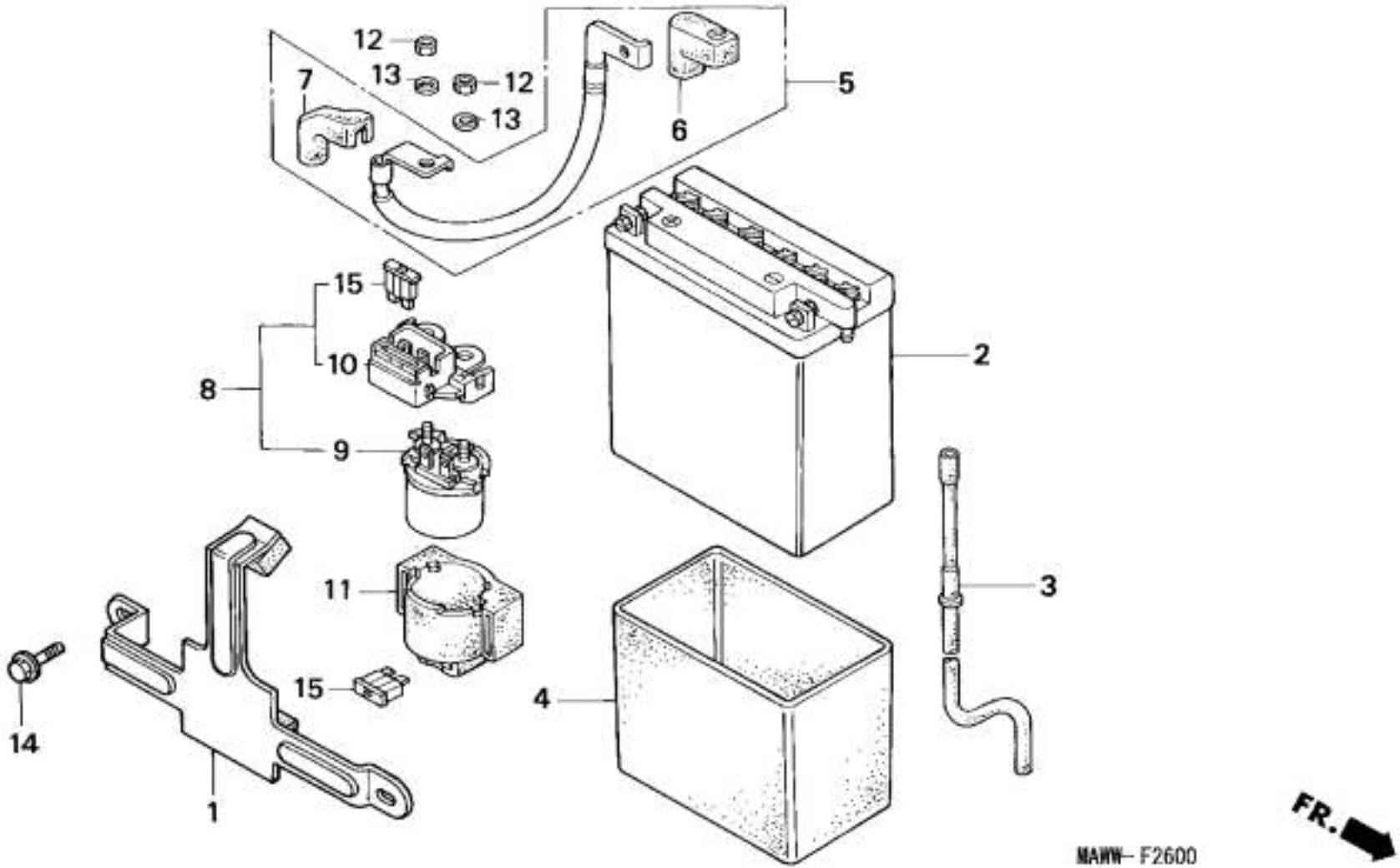
12
13
12
13
7
5
6
15
10
8
9
2
11
3
15
4
14
1
FR.
MAWW-F2600

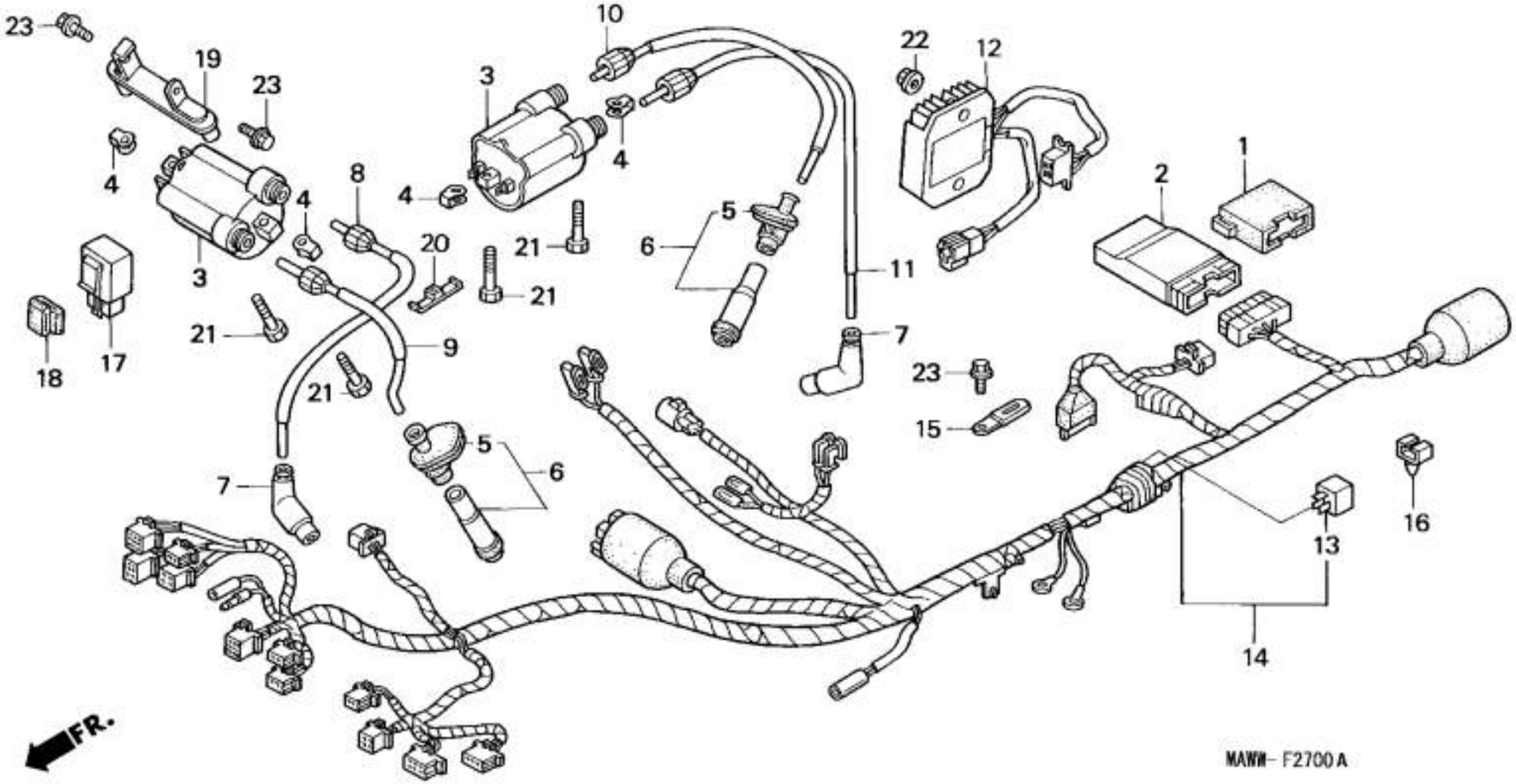

23
19
23
4
3
4
8
4
3
20
21
21
21
21
18
17
9
10
3
4
5
6
11
7
22
12
2
1
23
15
5
6
7
16
13
14
FR.
MAWW- F2700 A

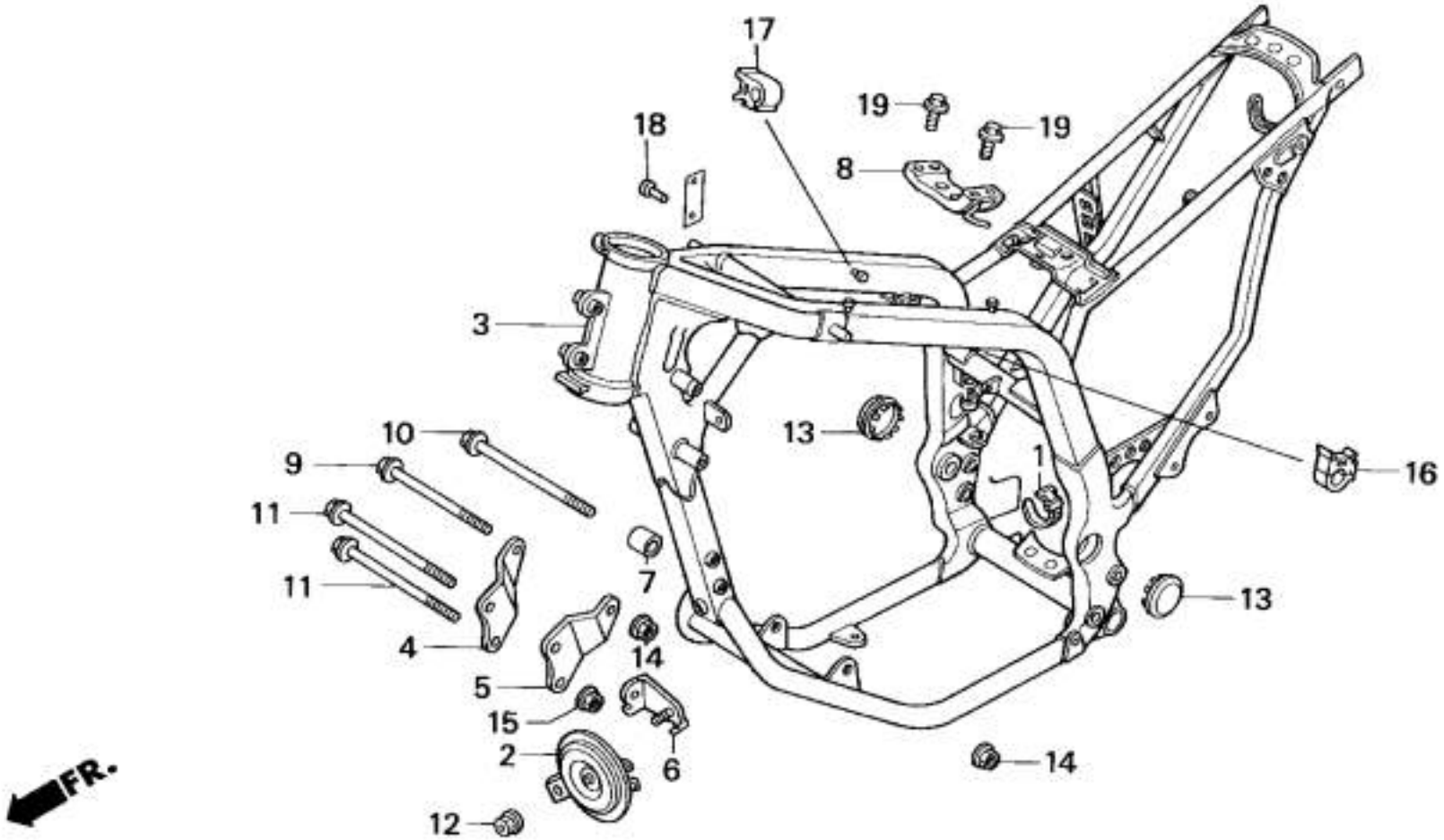

MAWN-F2800

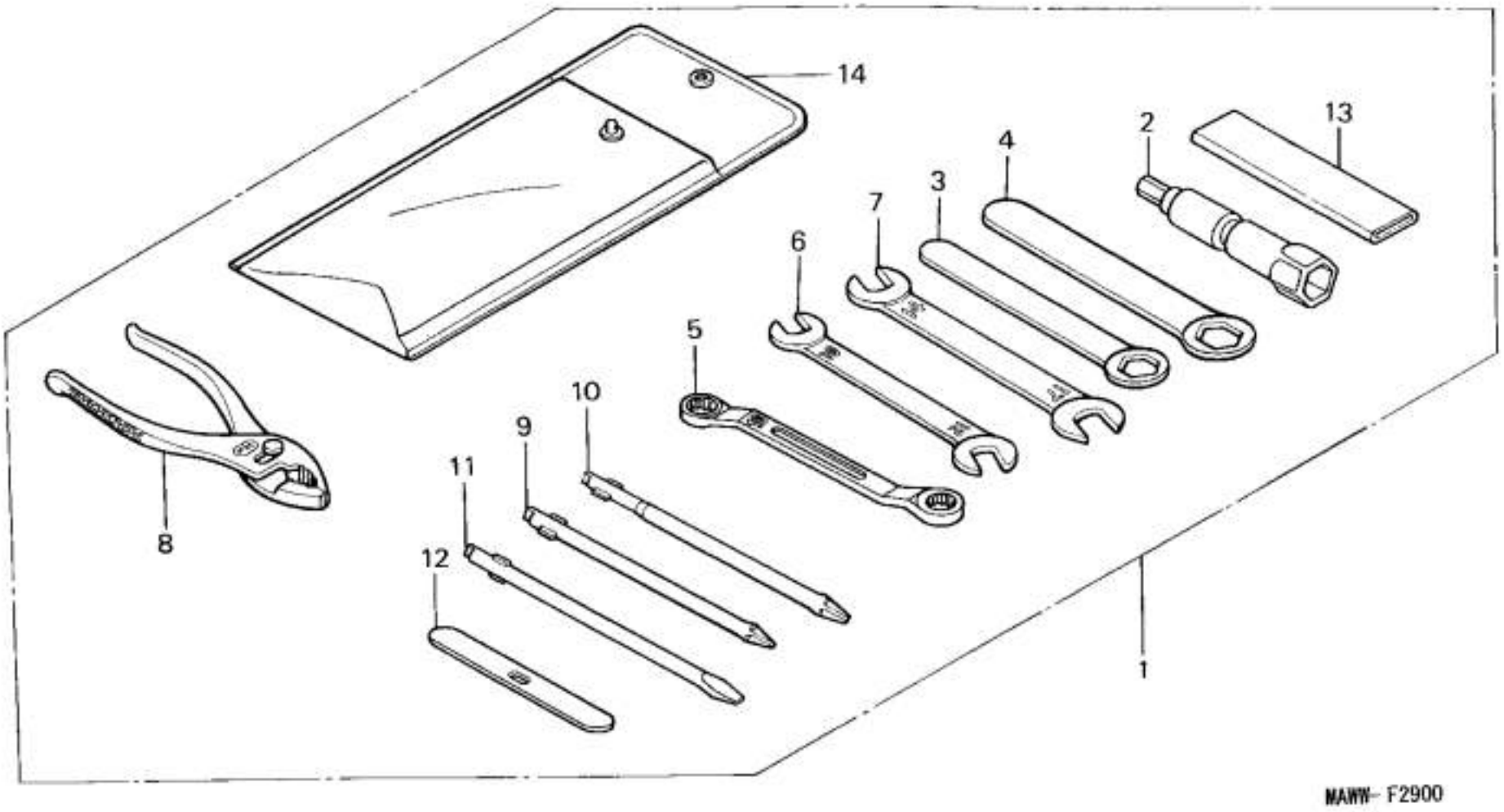
14
13
2
4
3
7
6
5
10
9
11
12
8
1
MAWW-F2900

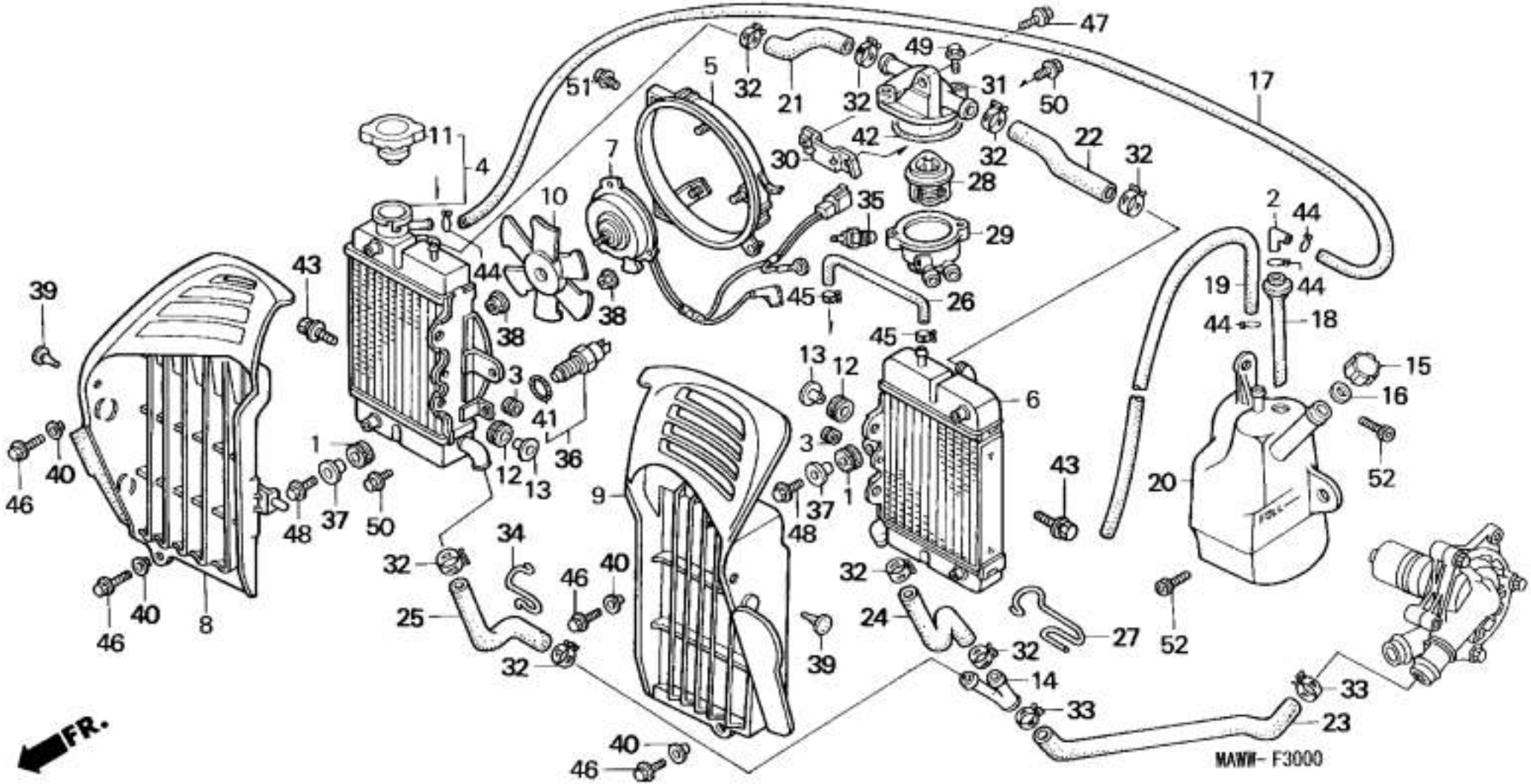
FR.
MAWW- F3000

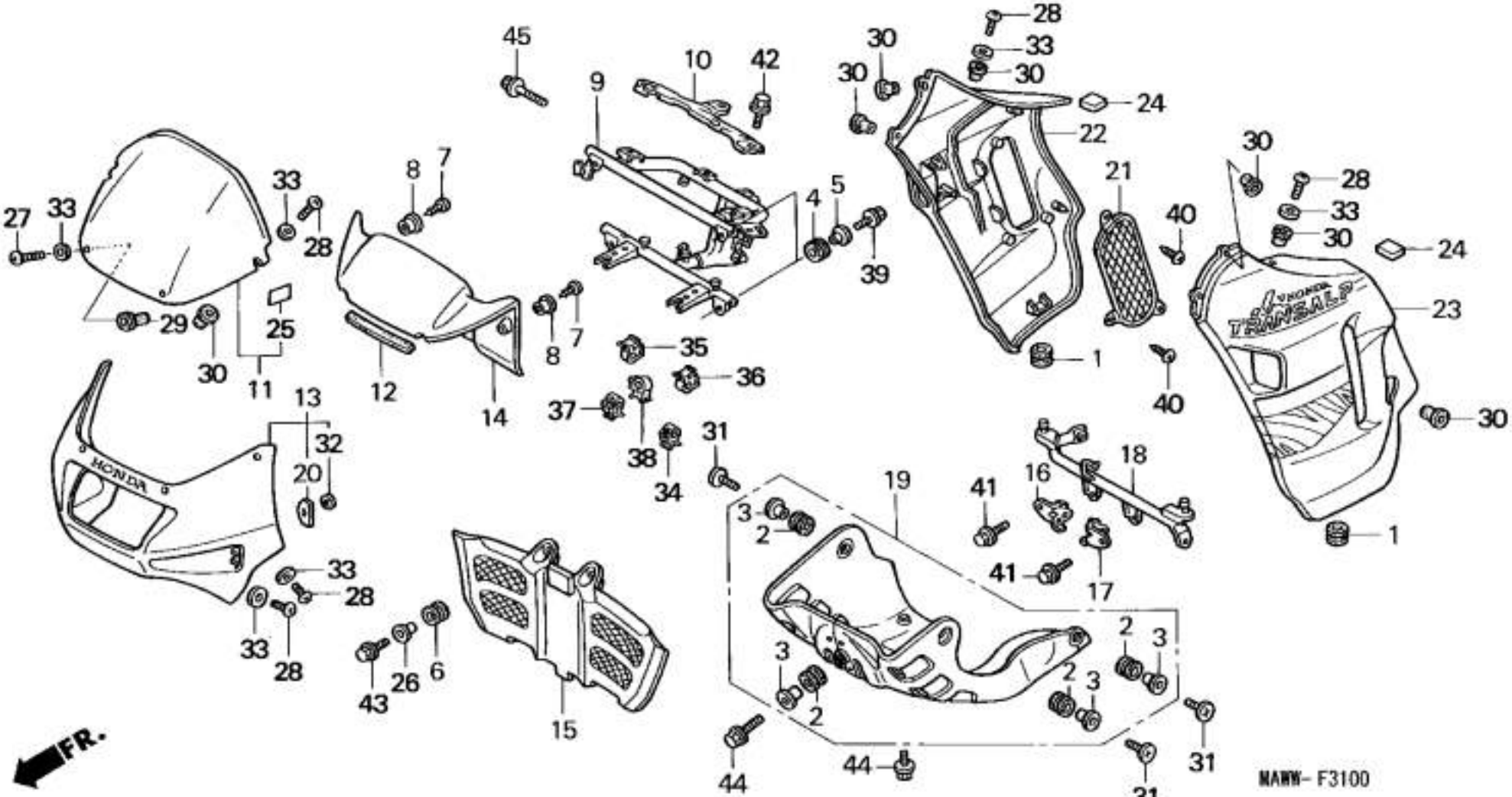
FR.
MAMW-F3100

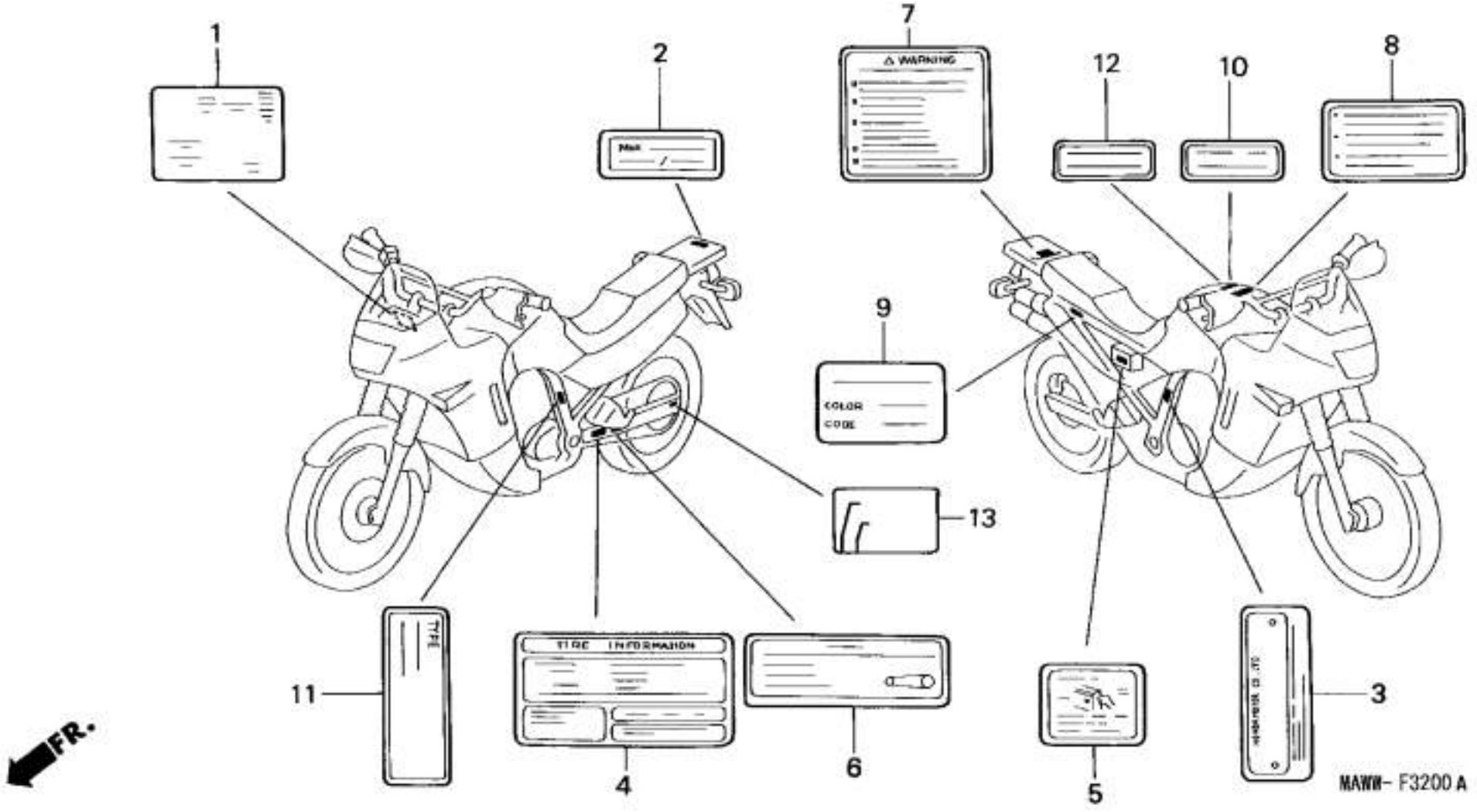
1
2
7
WARNING
12
10
8
9
COLOR
CODE
13
11
TIRE
TIRE INFORMATION
4
6
5
3
FR.
MAWW- F3200 A

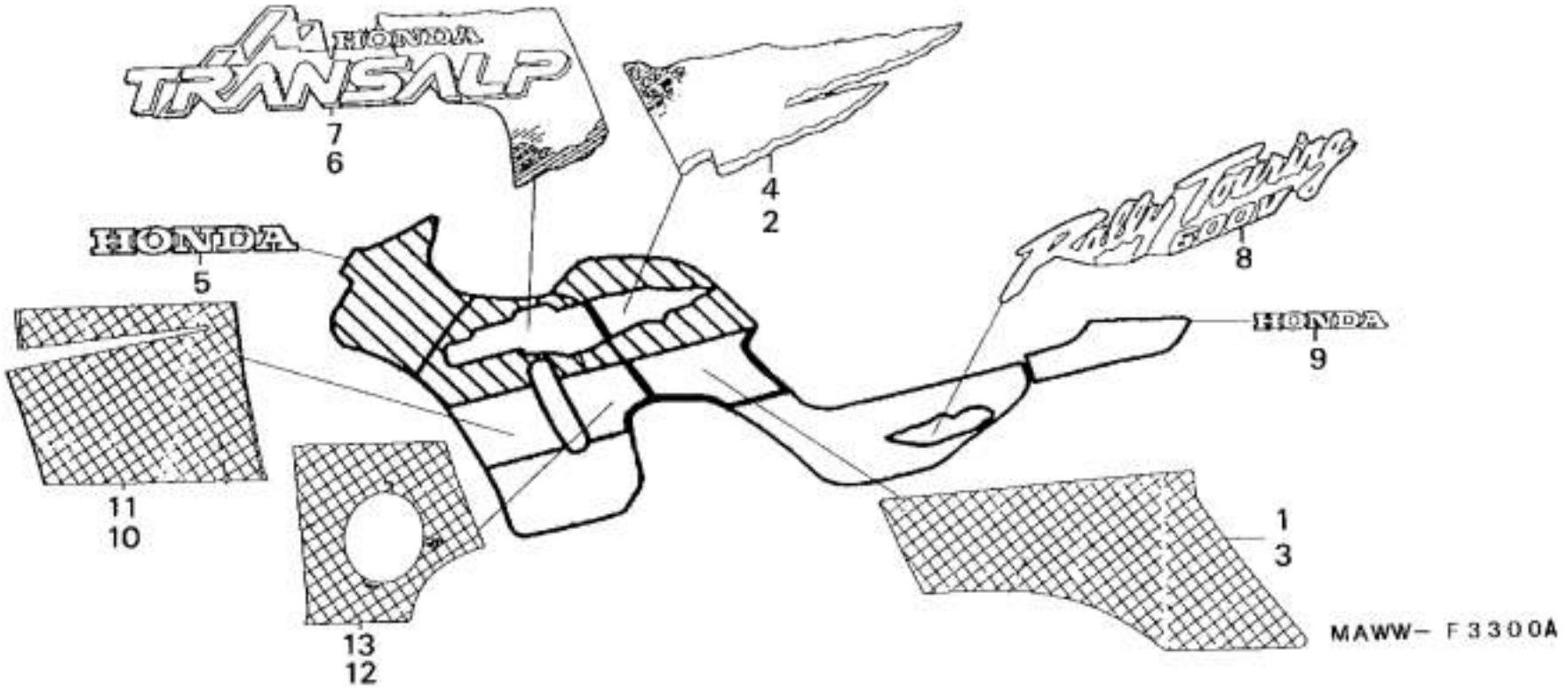
HONDA
TRANSALP
7
6
4
2
HONDA
5
8
HONDA
9
11
10
1
3
13
12
MAWW- F3300A

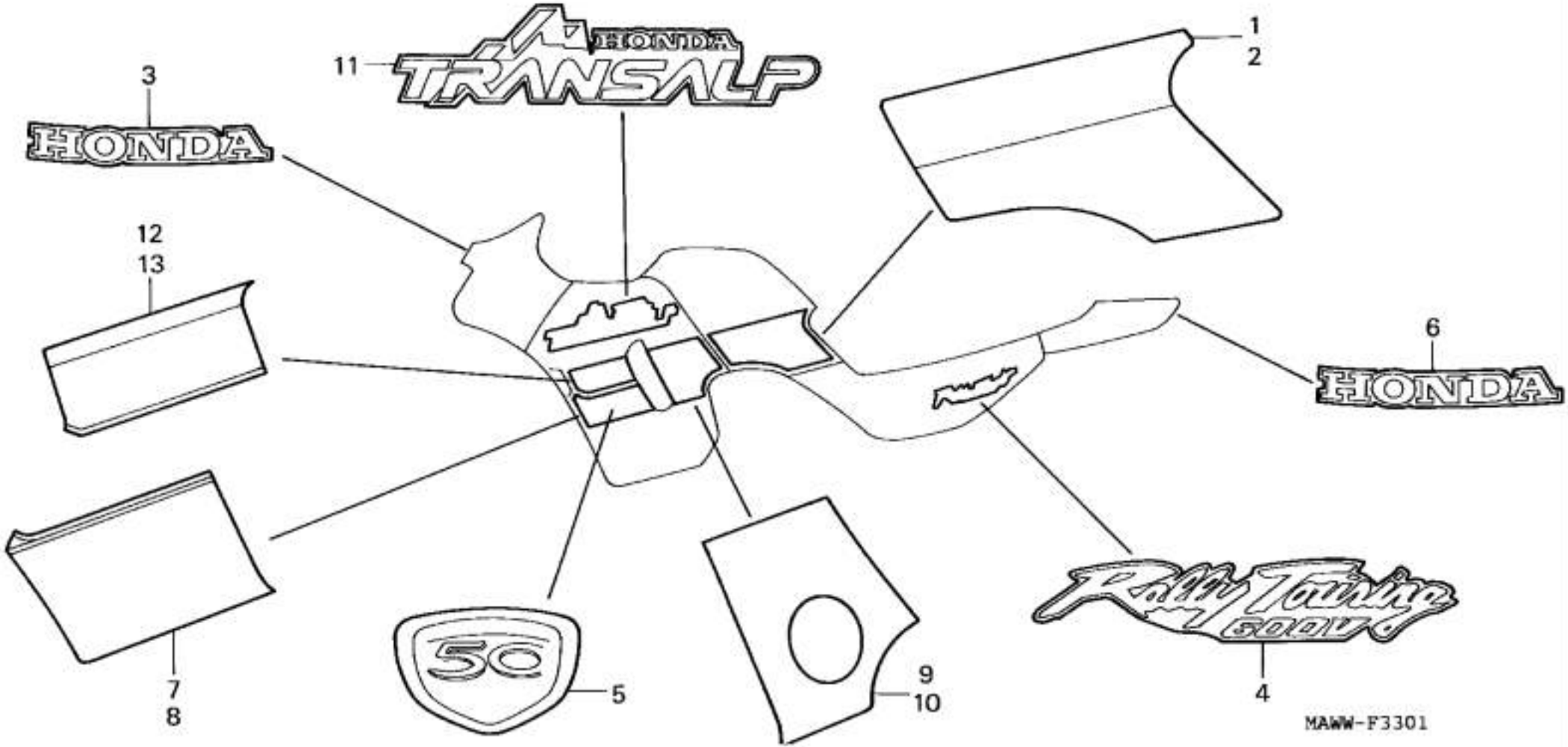
11
HONDA
TRANSALP
1
2
3
HONDA
12
13
6
HONDA
7
8
50
5
9
10
4
MAWW-F3301

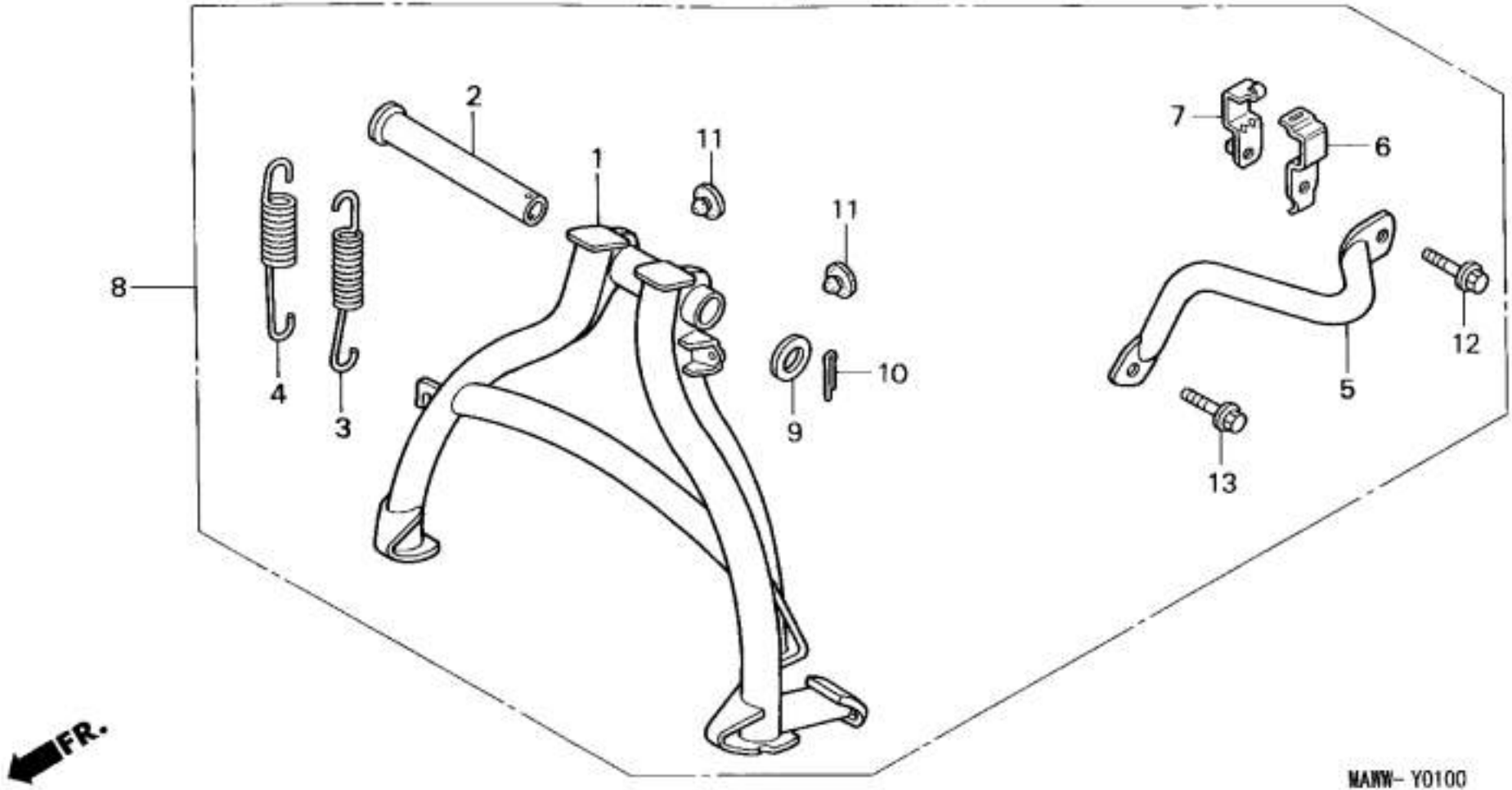
1
2
3
4
5
6
7
8
9
10
11
11
12
13
FR.
MAJW- Y0100

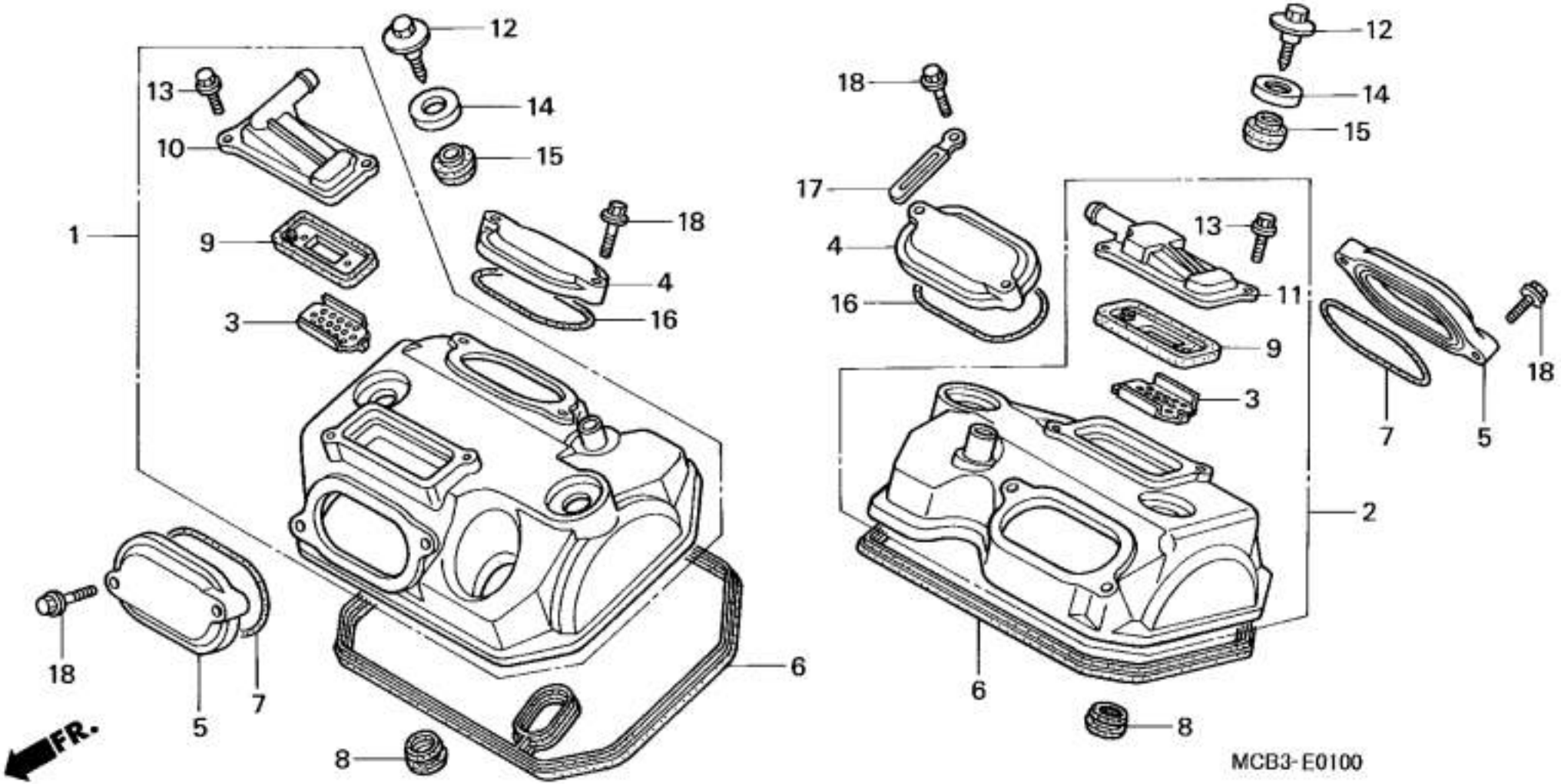
12
13
14
10
15
1
18
9
4
3
16
18
5
7
6
8
FR.
12
18
14
15
17
13
4
11
16
9
3
18
7
5
2
6
8
MCB3-E0100

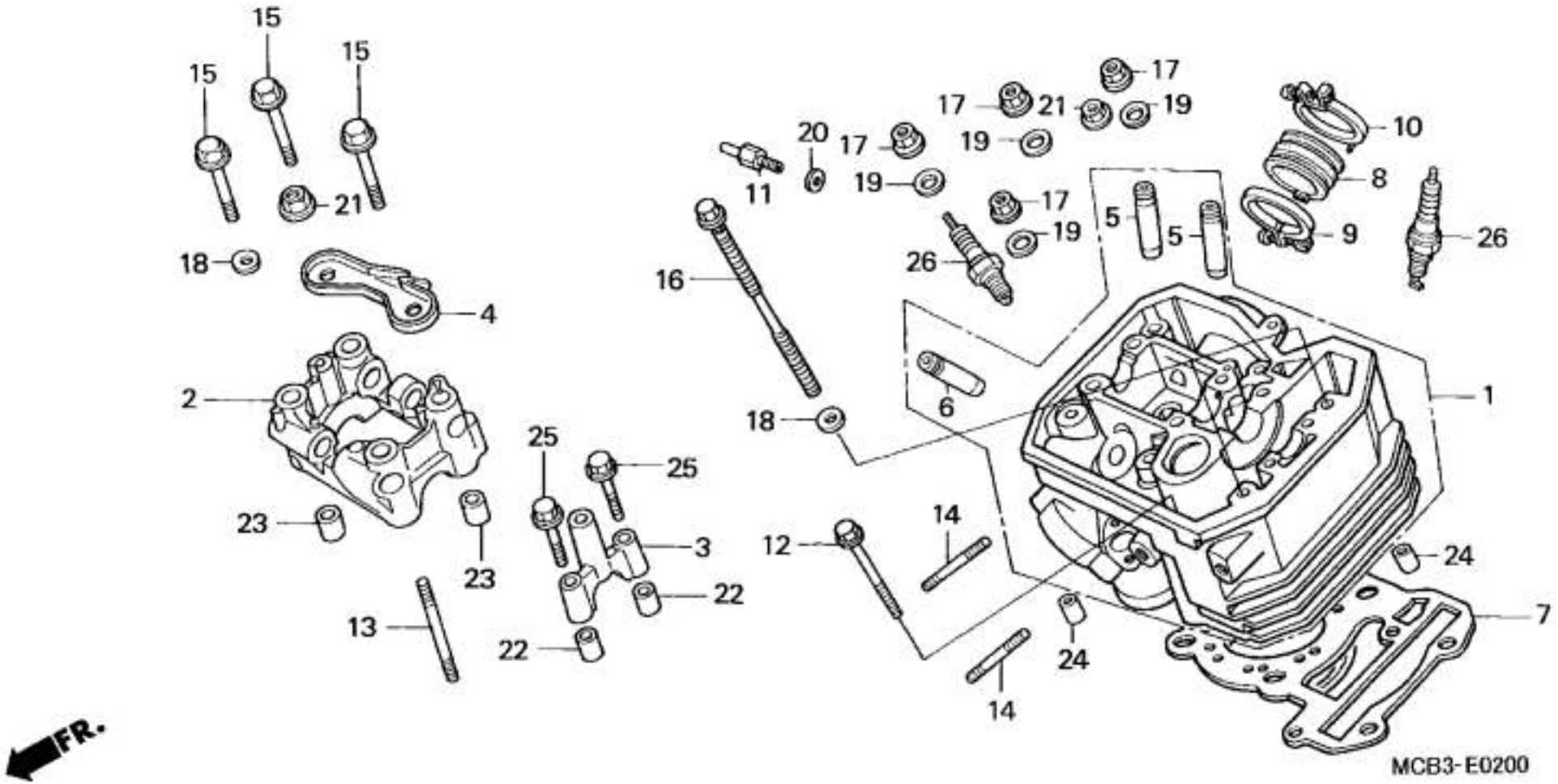
15
15
15
21
18
4
2
23
23
13
25
25
3
22
22
16
11
20
17
17
17
21
19
19
19
17
19
26
5
5
10
8
9
26
6
18
1
12
14
14
24
24
7
FR.
MCB3-E0200

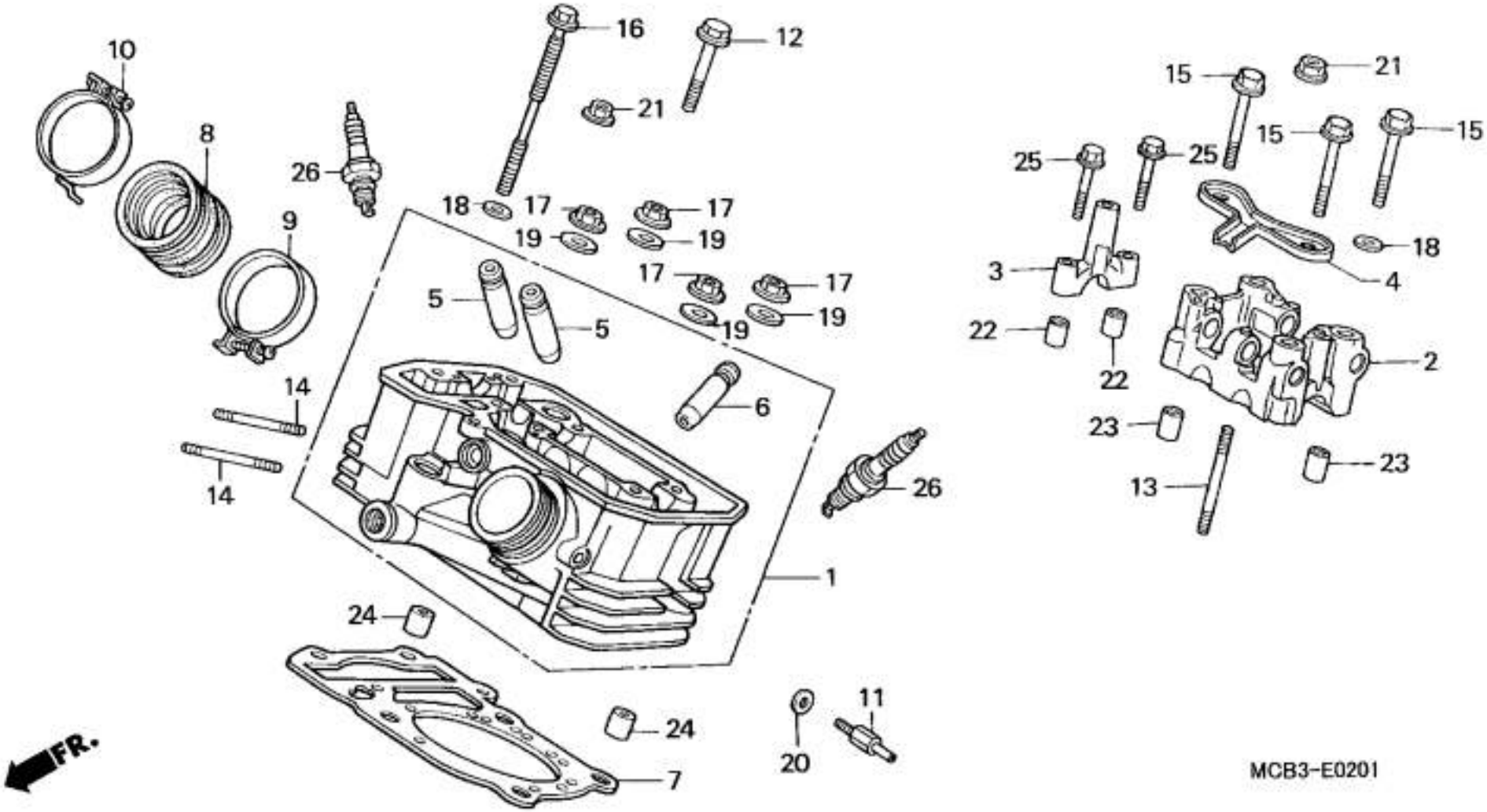

10
8
9
26
16
12
21
18
17
19
5
6
14
1
24
7
20
11
15
25
3
4
22
2
23
13
FR.
MCB3-E0201

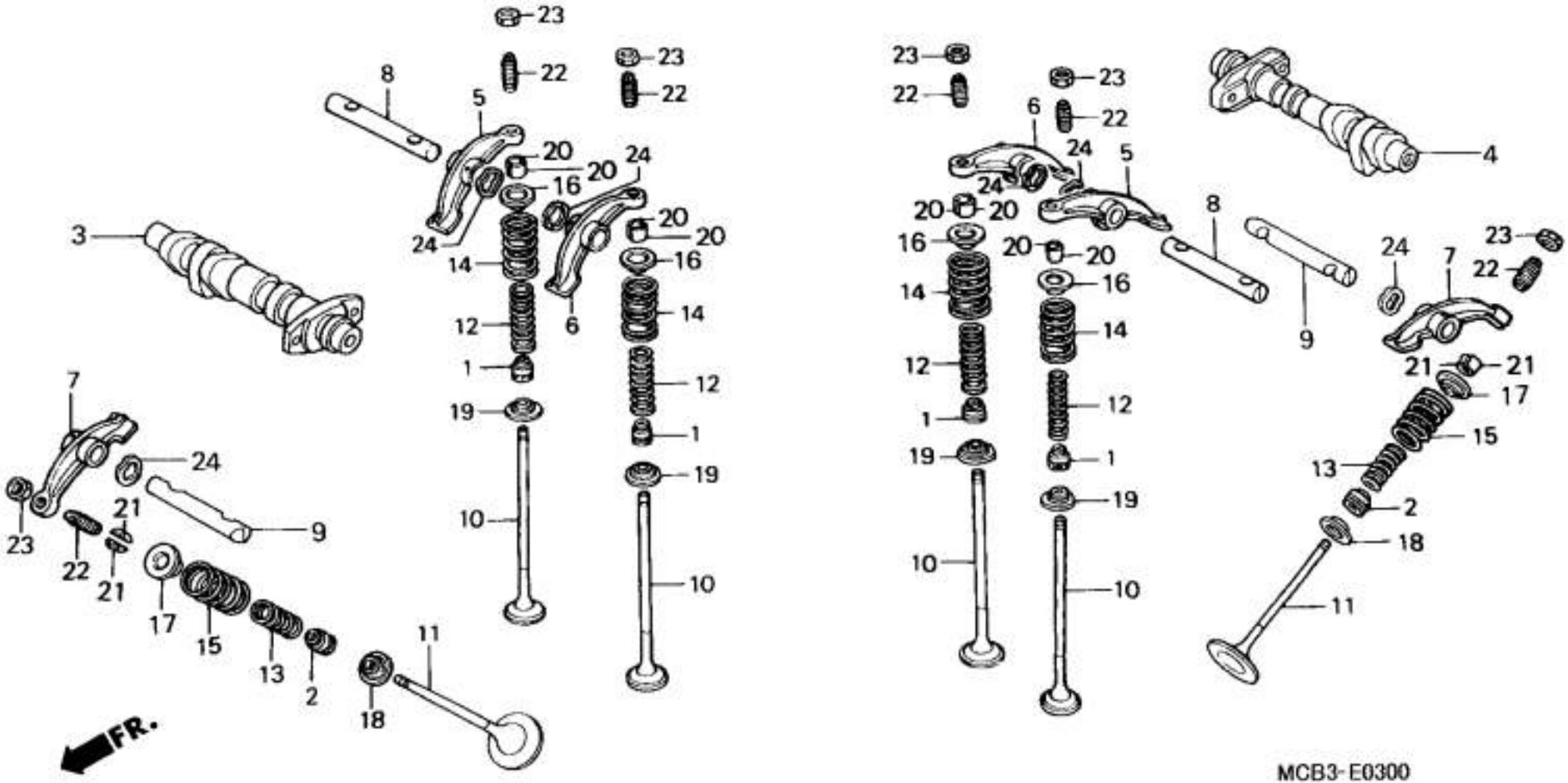
FR.
MCB3-E0300

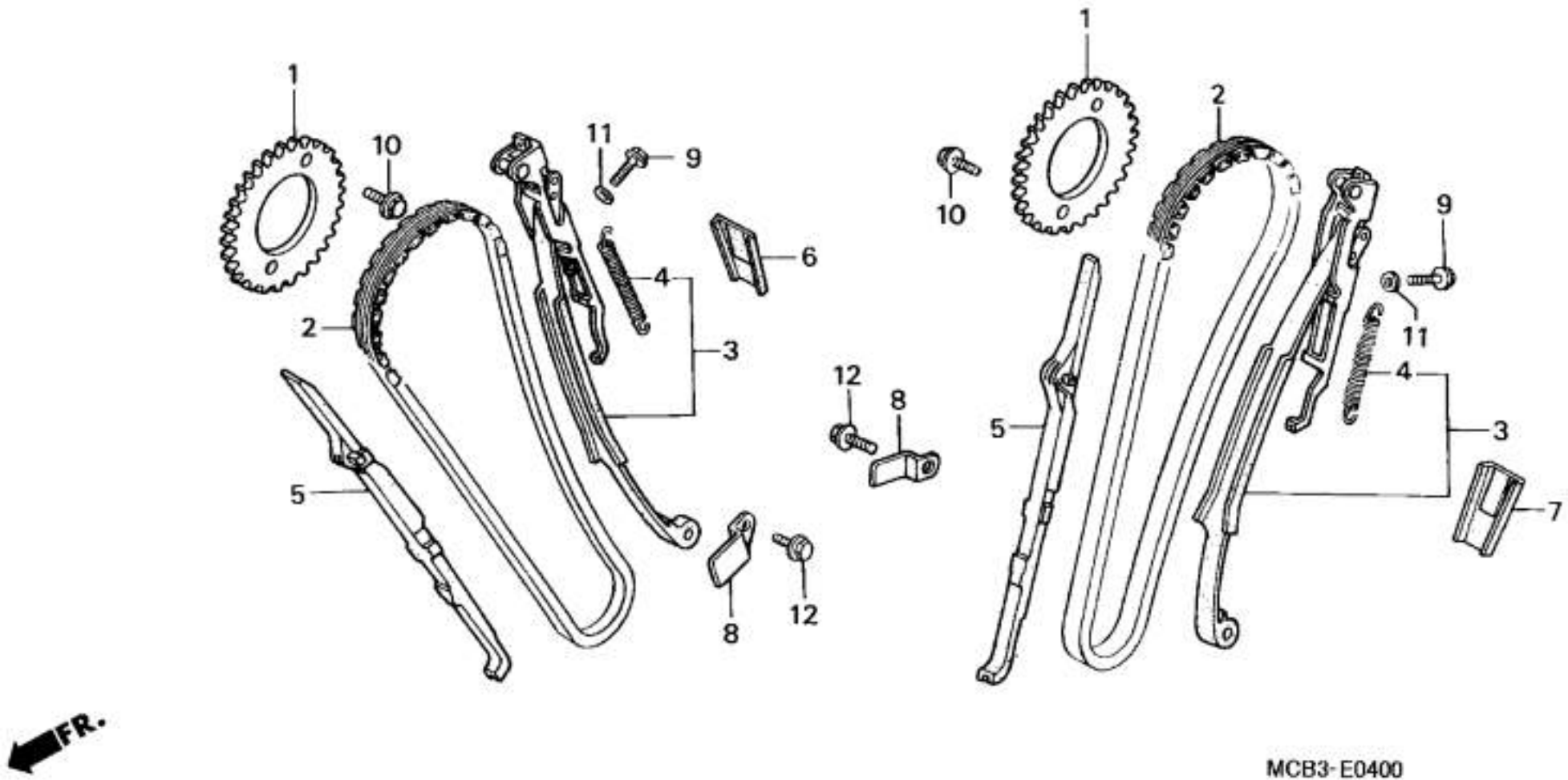
1
10
11
9
6
4
2
3
12
8
5
12
8
FR.
1
2
10
9
11
4
3
5
7
MCB3-E0400

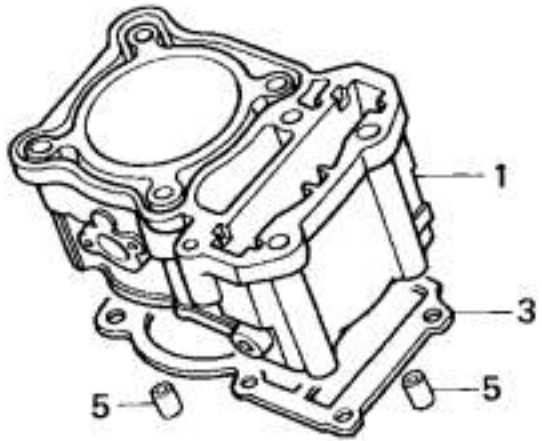

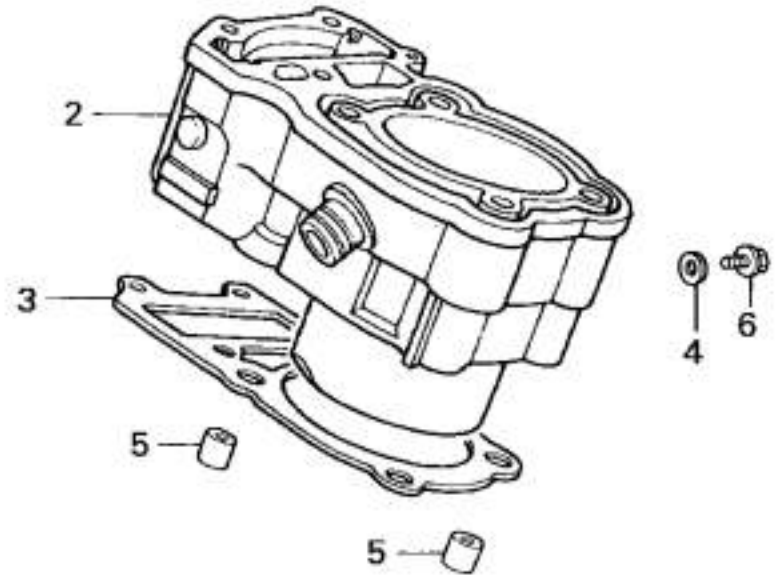

MCB3-E0500

FR.

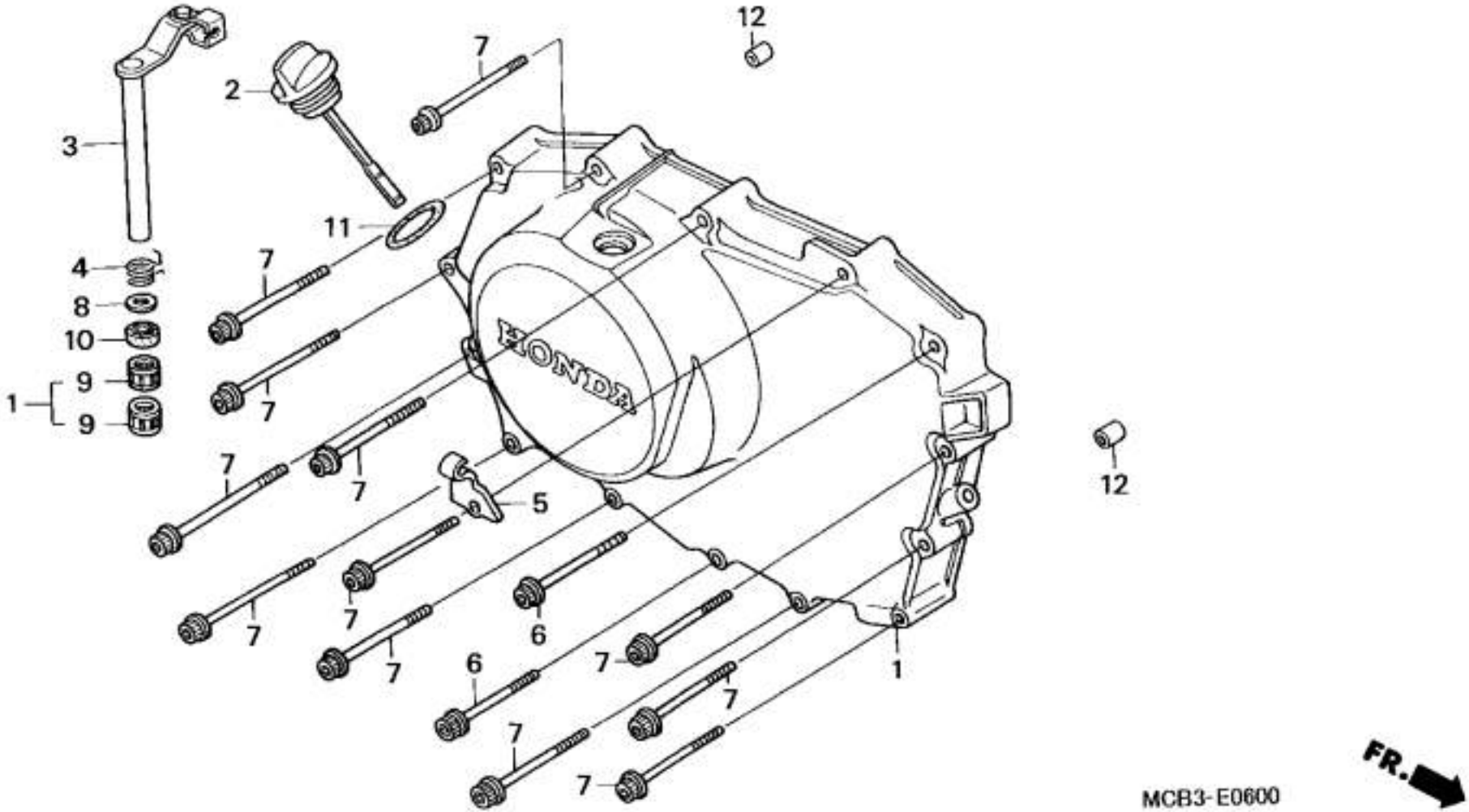

12
7
2
3
11
4
8
10
9
1
9
7
7
7
7
5
7
7
7
6
6
7
7
7
7
1
12
HONDA
MCB3-E0600
FR.

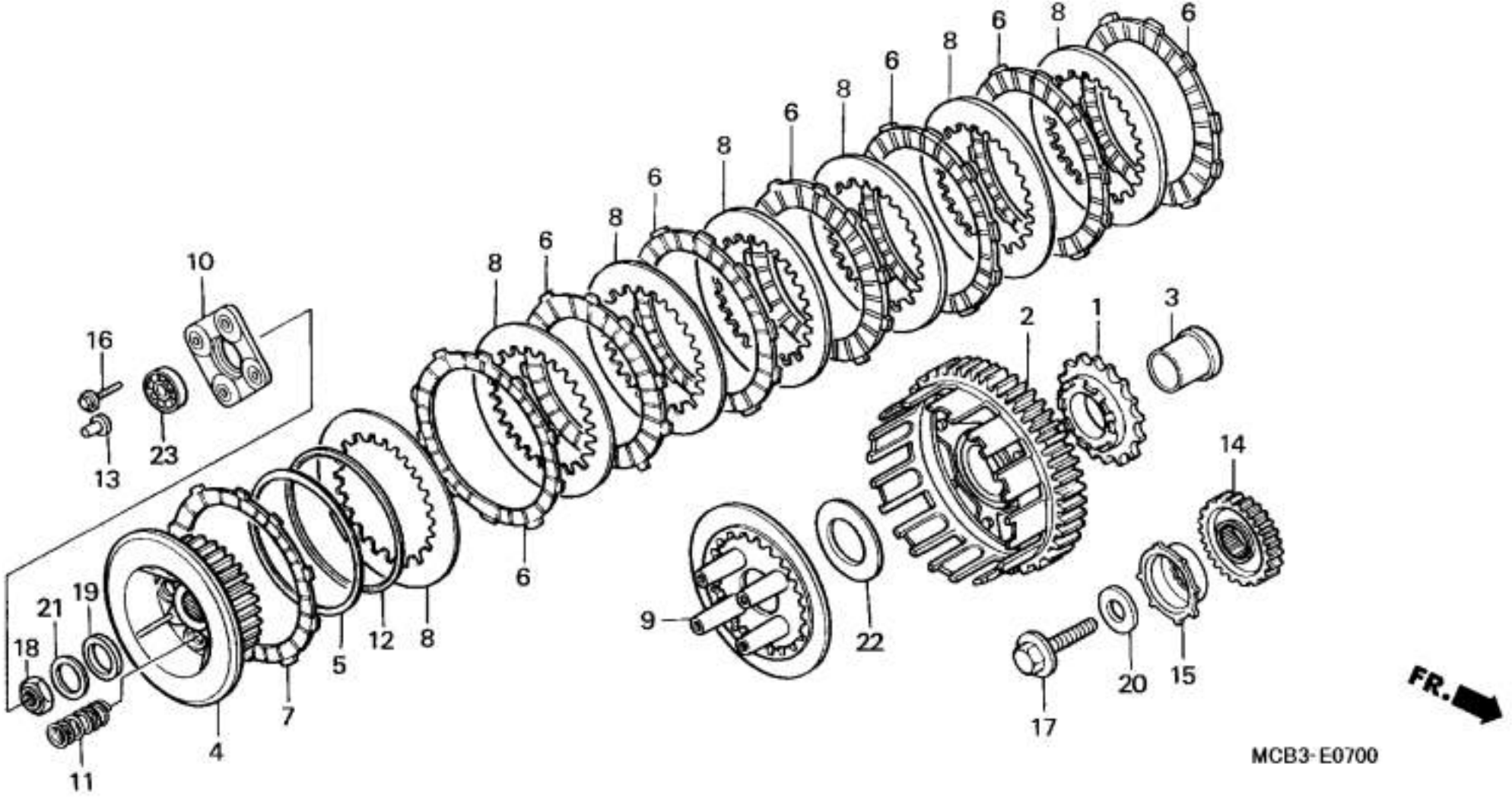
1
2
3
4
5
6
7
8
9
10
11
12
13
14
15
16
17
18
19
20
21
22
23
FR.
MCB3-E0700

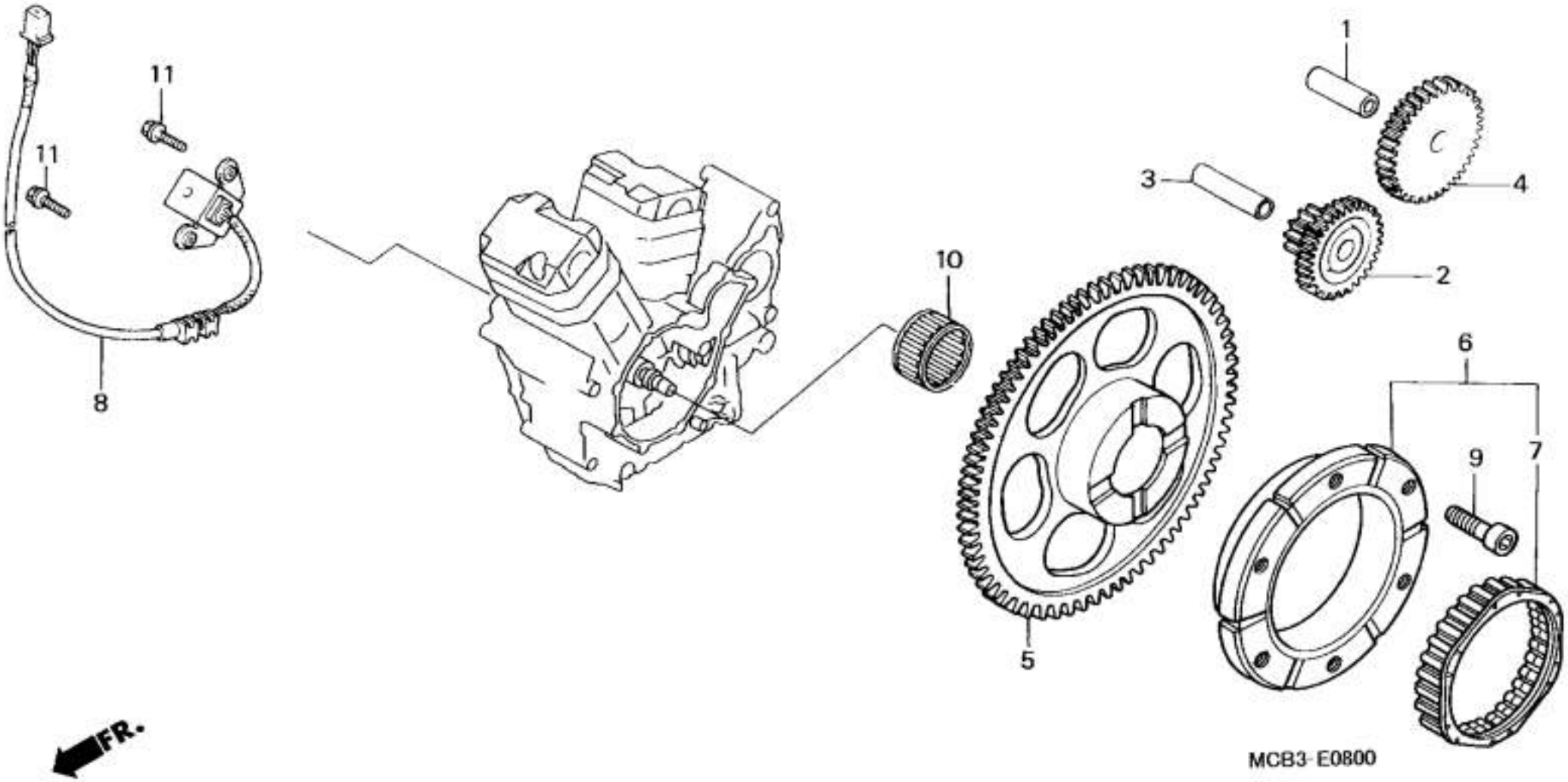
1
2
3
4
5
6
7
8
9
10
11
11
FR.
MCB3-E0800

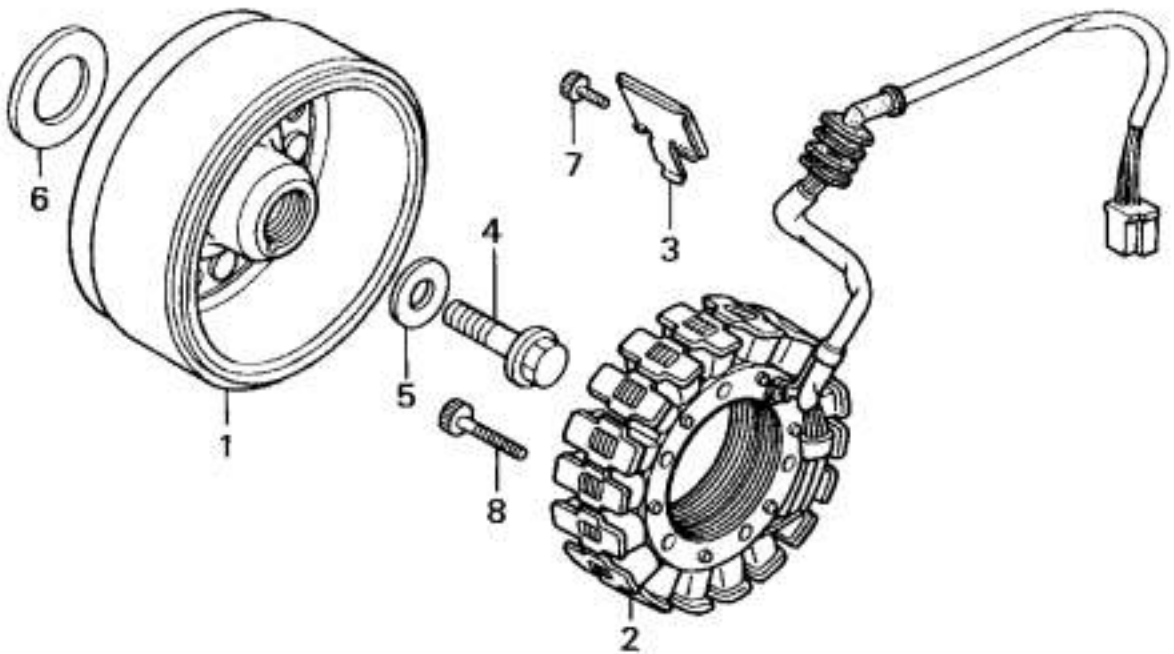

FR.

MCB3-E0900

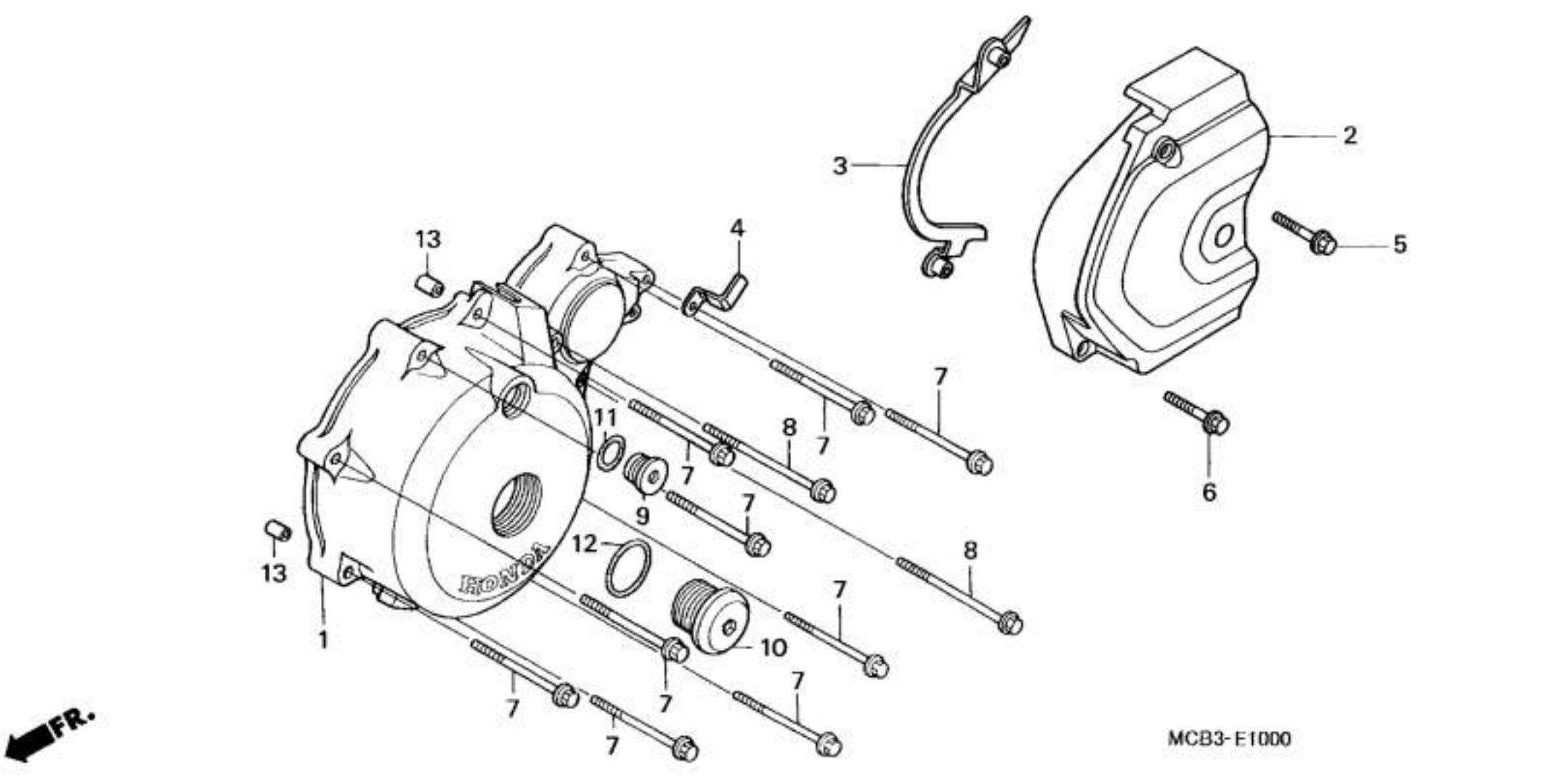
1
2
3
4
5
6
7
8
9
10
11
12
13
HONDA
FR.
MCB3-E1000

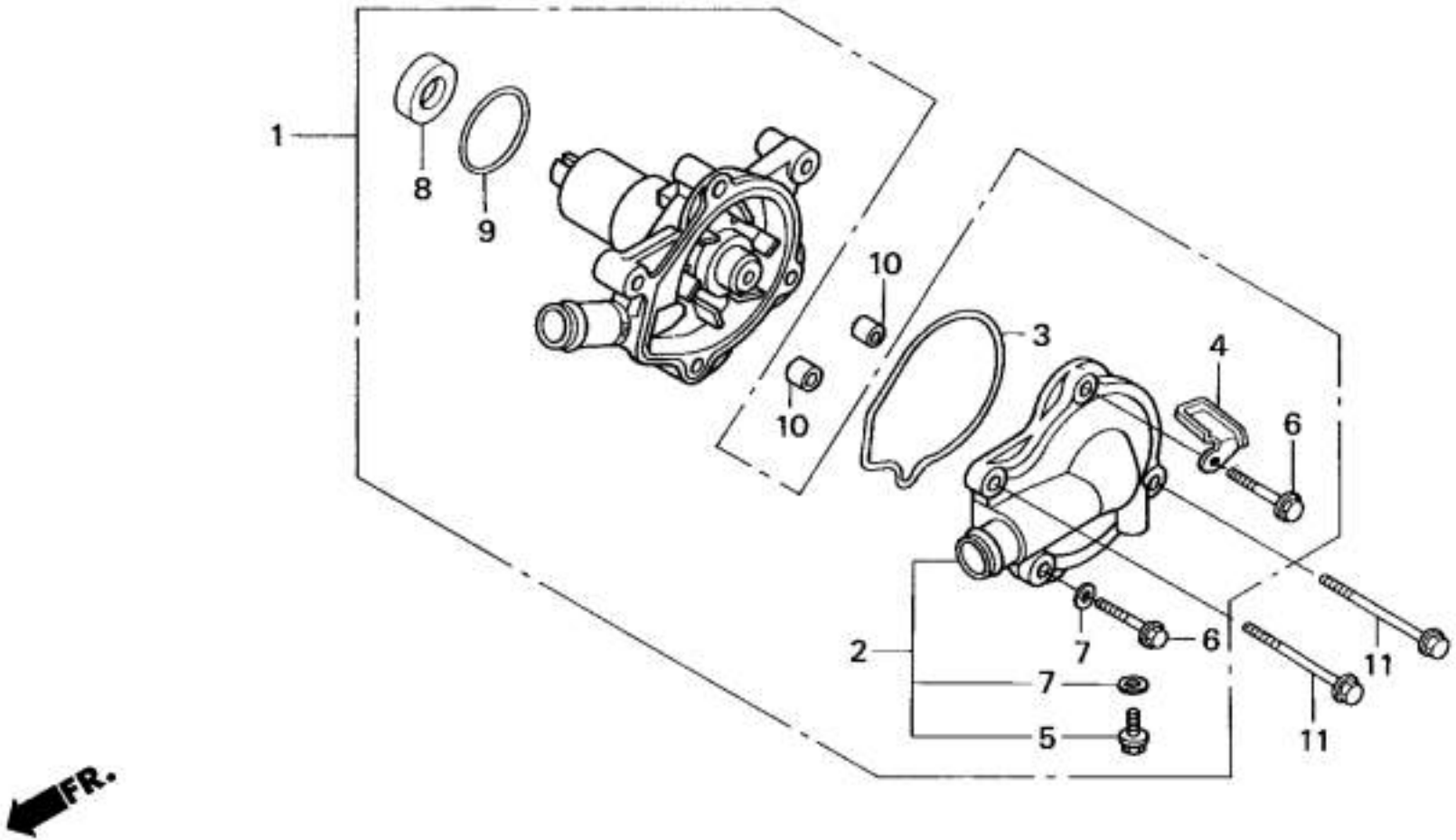

MCB3-E1100

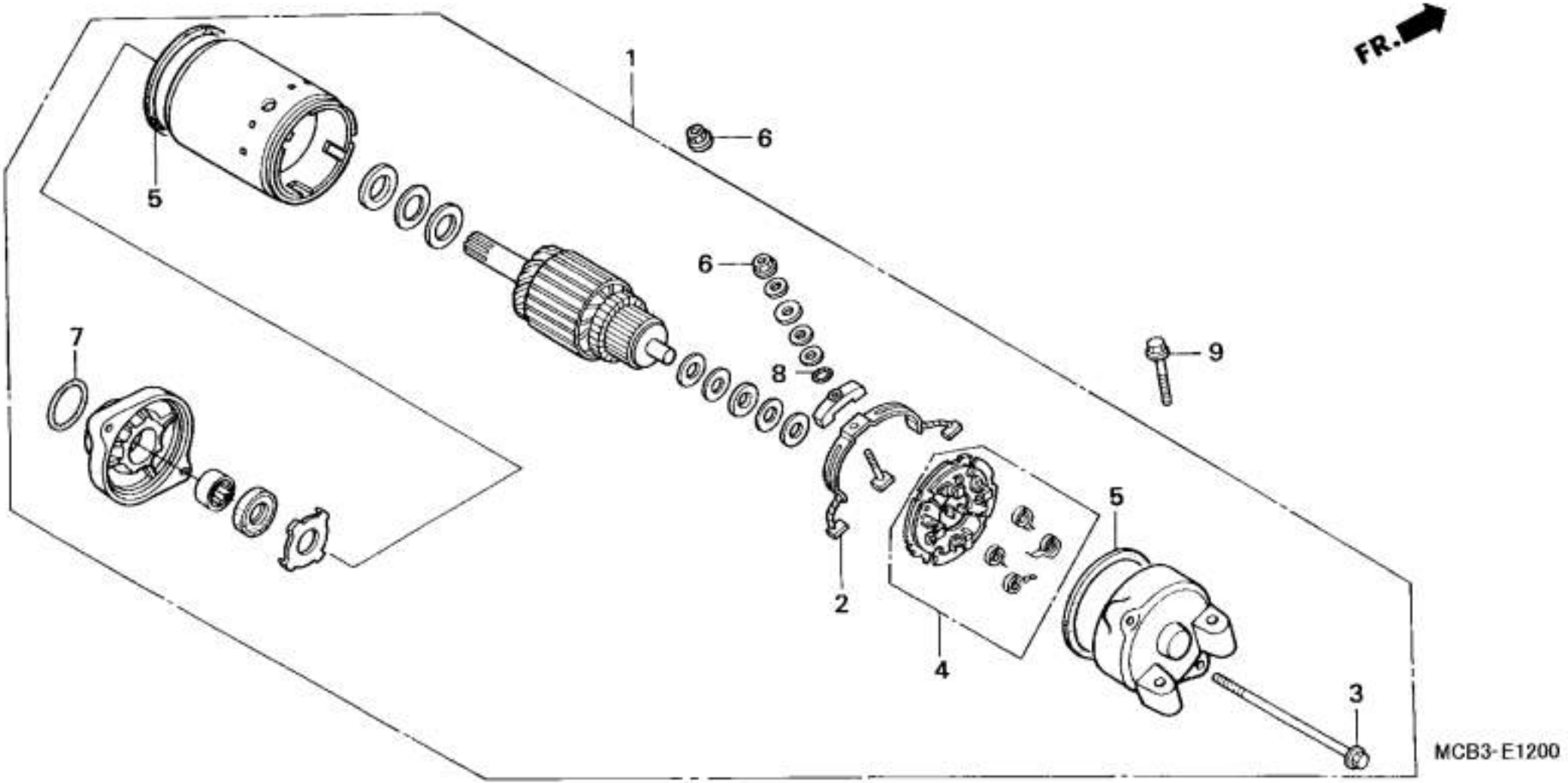
FR.
1
6
5
6
7
8
9
2
5
4
3
MCB3-E1200

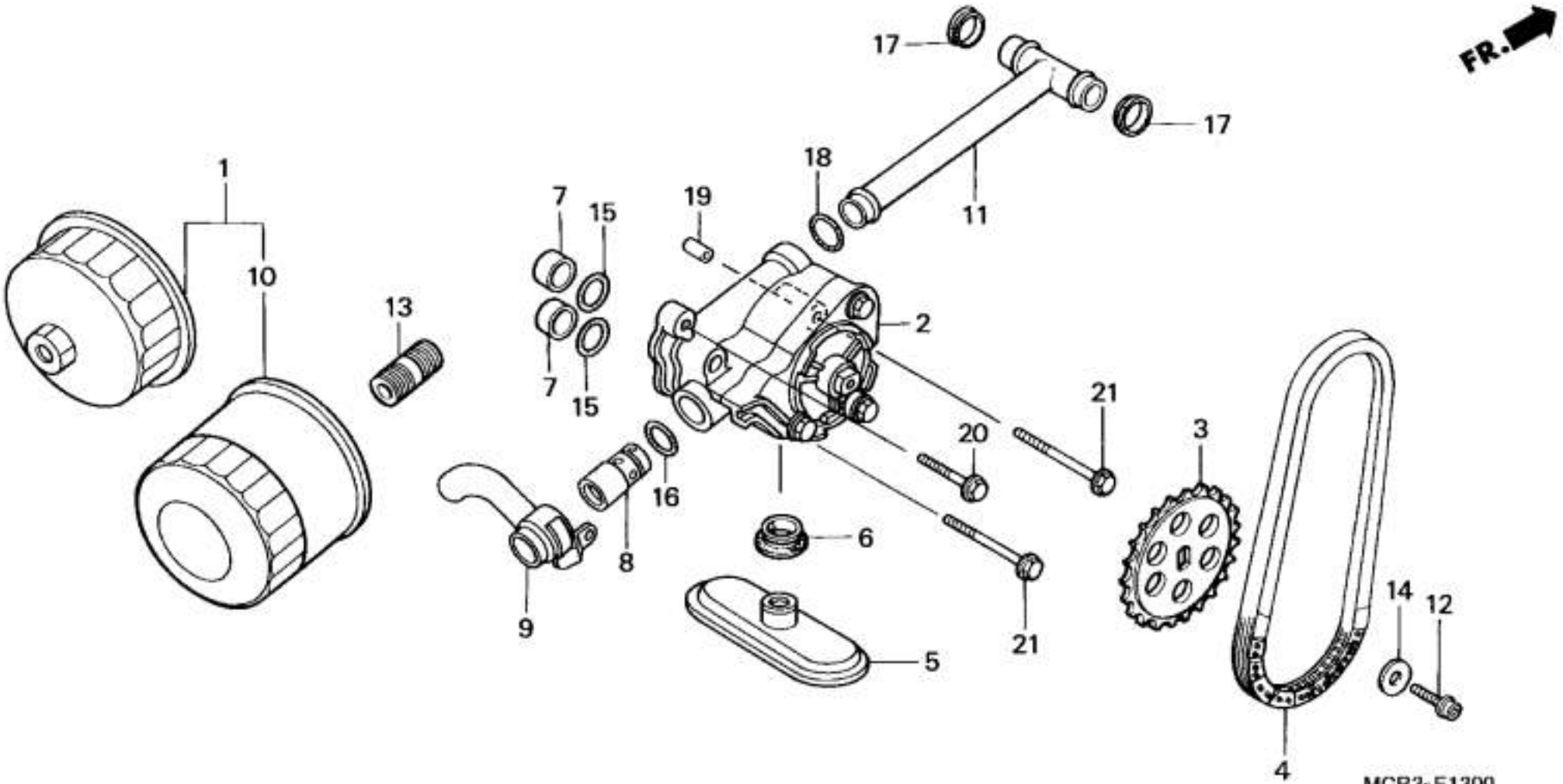
FR.
17
17
18
11
1
10
13
7
15
19
2
7
15
21
20
3
16
8
6
9
21
5
14
12
4
MCB3-E1300

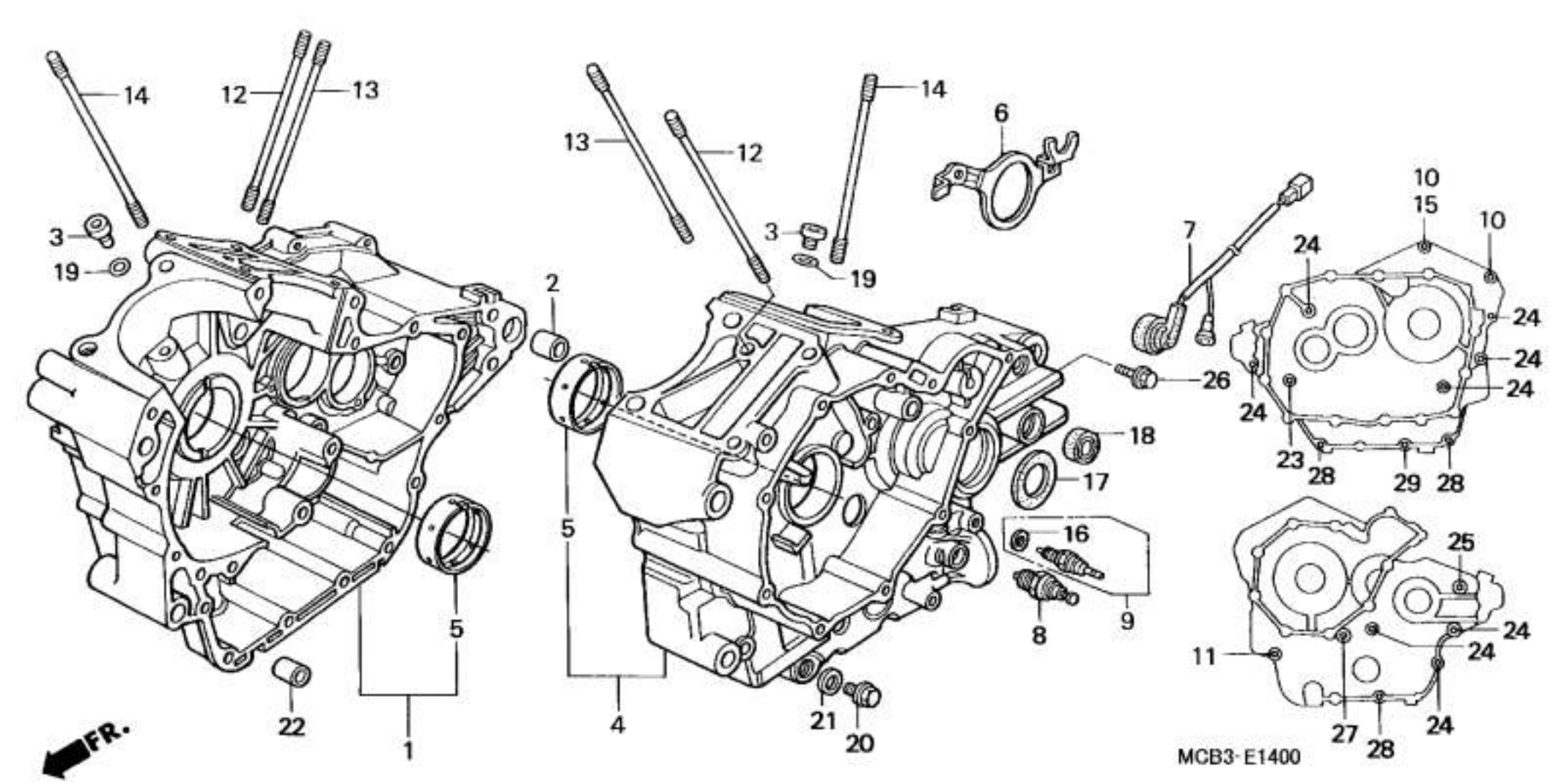
14
12
13
3
19
22
1
5
13
12
14
6
3
19
2
5
4
21
20
18
17
16
8
9
7
26
10
15
10
24
24
24
24
24
23
28
29
28
25
24
24
11
27
28
24
FR.
MCB3-E1400

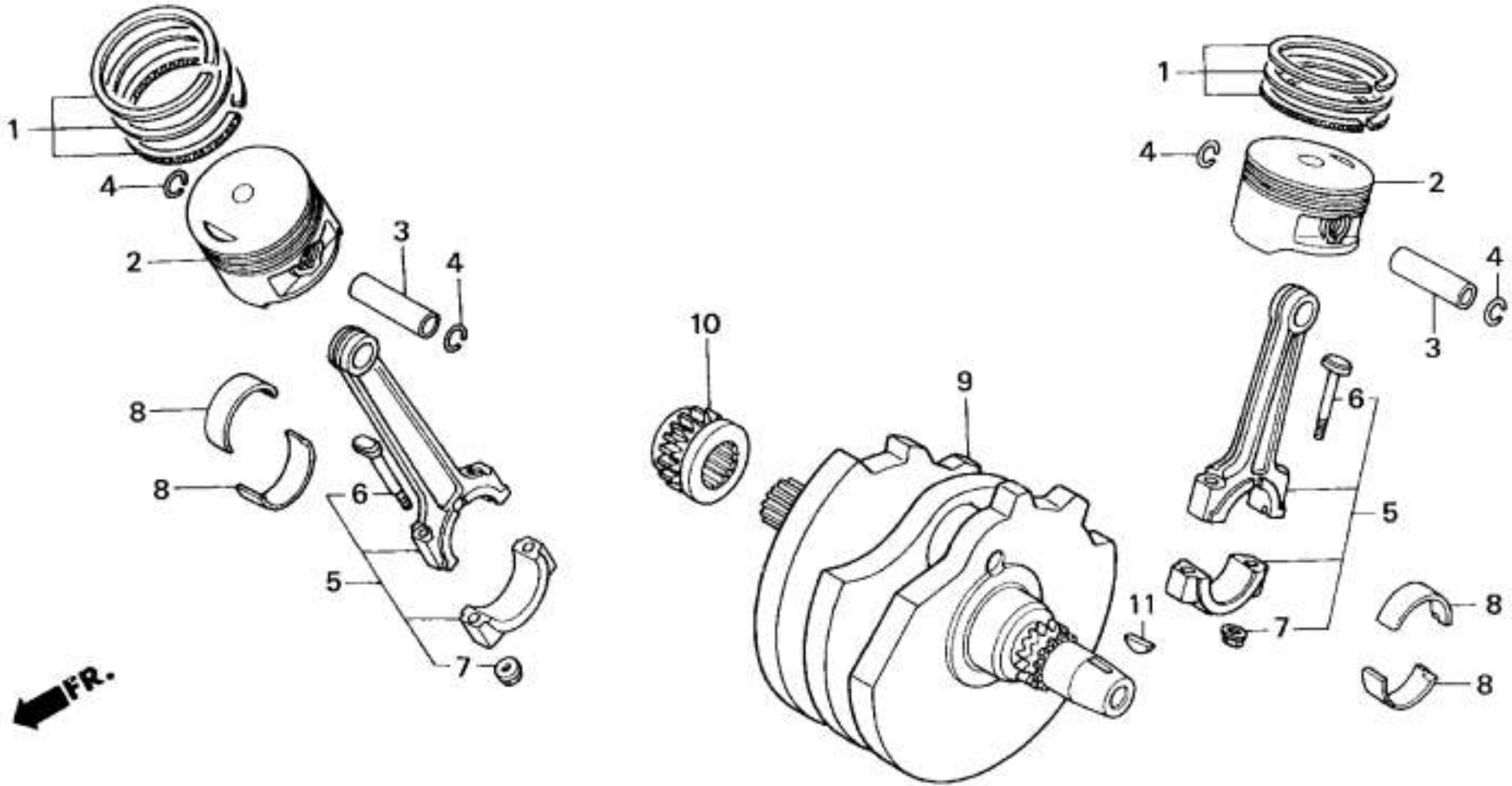

MCB3-E1500

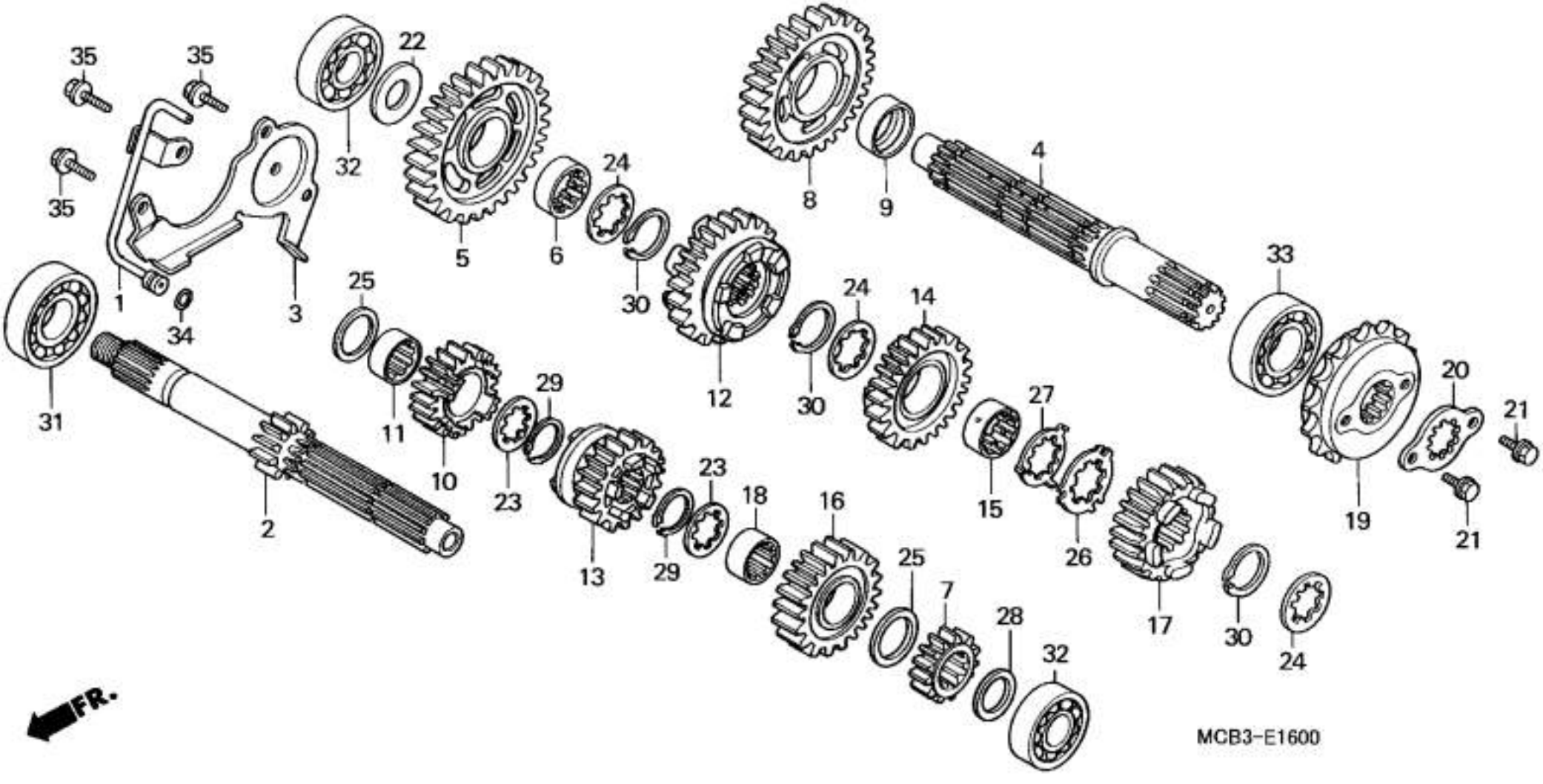

35
35
35
22
32
24
8
9
4
5
6
30
1
3
34
25
12
24
14
33
31
11
10
29
23
30
27
20
21
2
13
29
23
18
16
15
26
19
21
25
7
28
32
17
30
24
FR.
MCB3-E1600

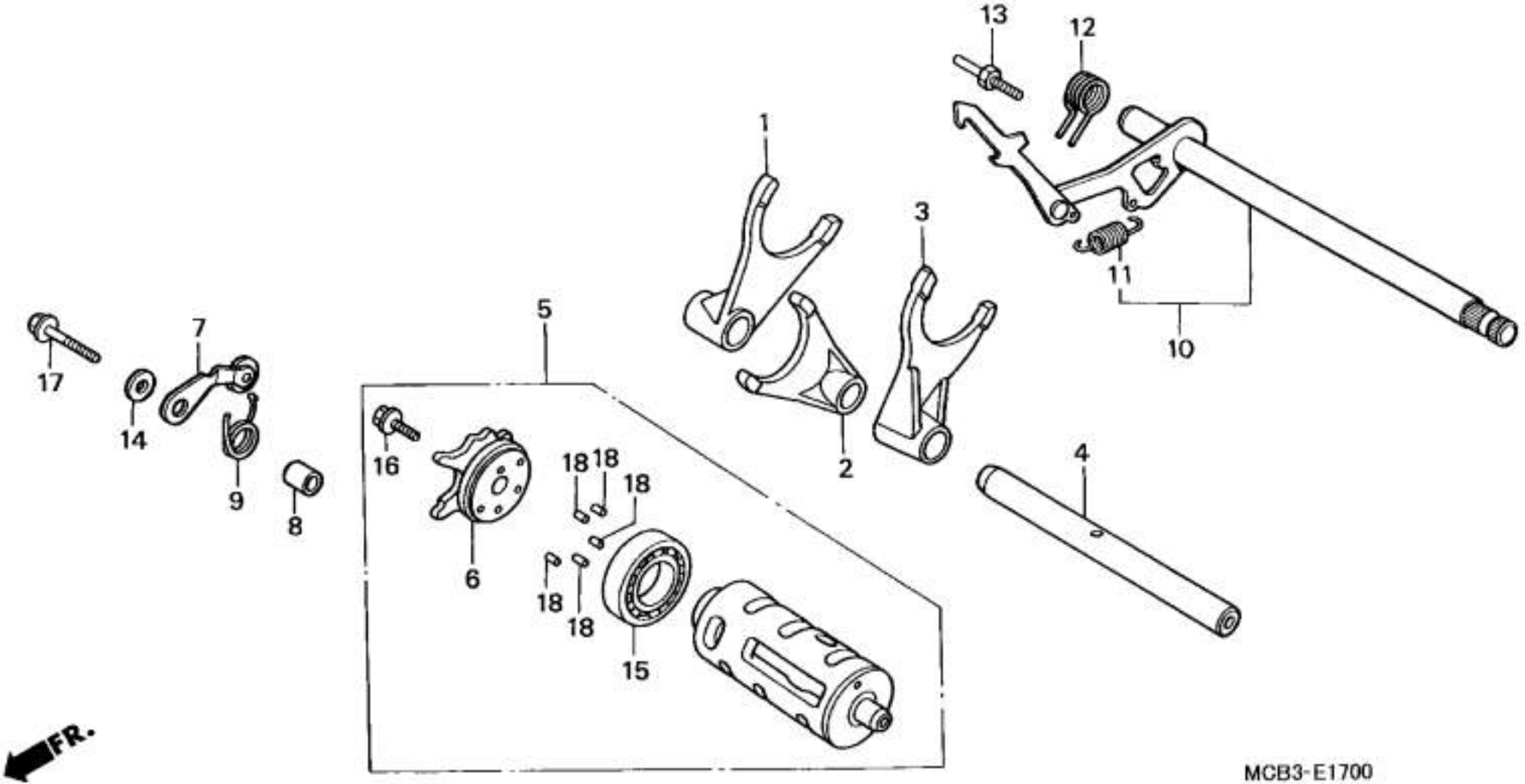
13
12
1
3
11
10
5
7
17
14
9
8
16
6
18
18
18
18
18
15
2
4
FR.
MCB3-E1700

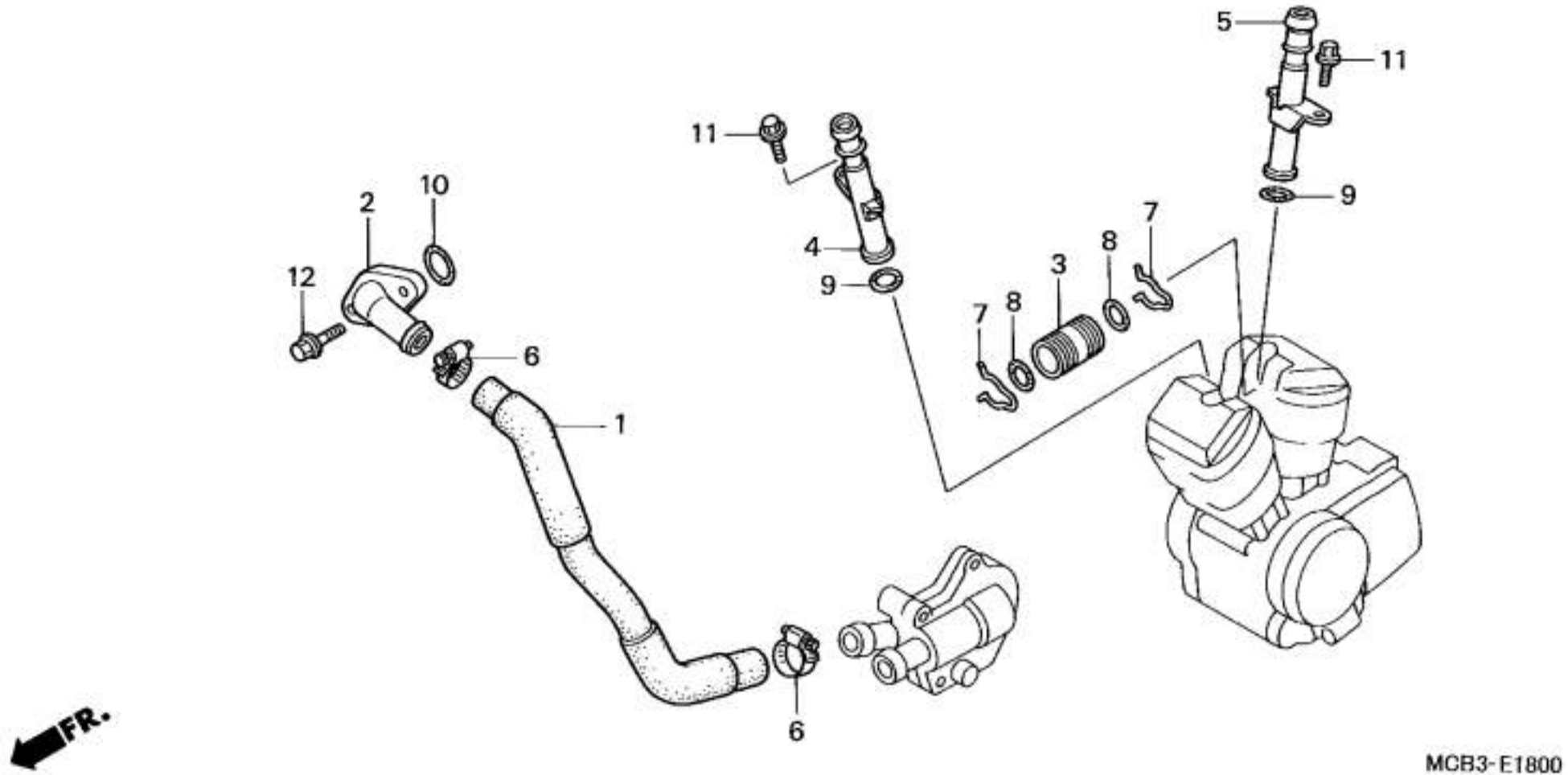

5
11
11
9
10
2
4
7
8
3
12
9
7
8
6
1
6
FR.
MCB3-E1800

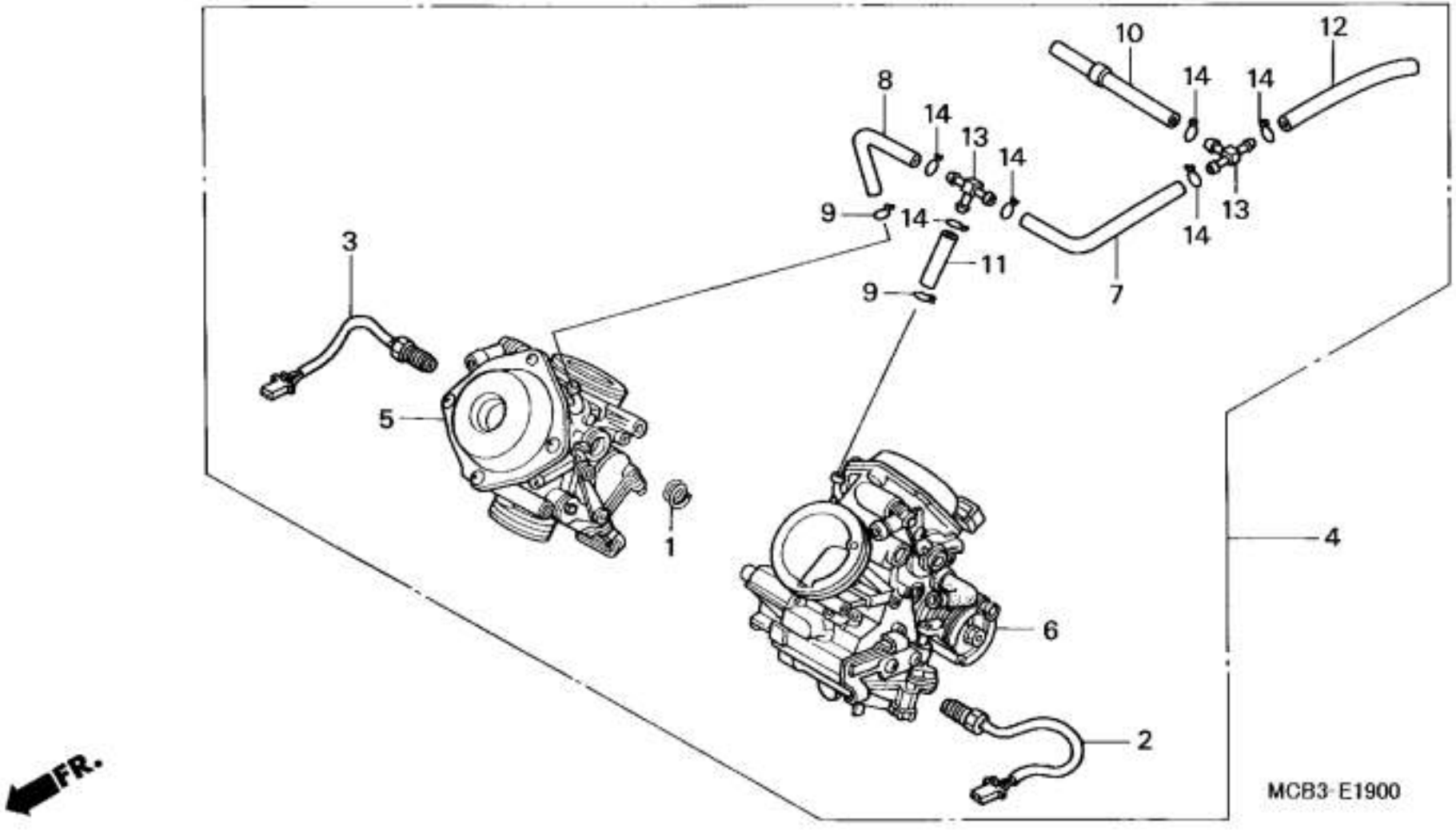
10
12
8
14
14
14
13
14
9
14
13
14
14
11
9
7
3
5
1
4
6
2
FR.
MCB3-E1900

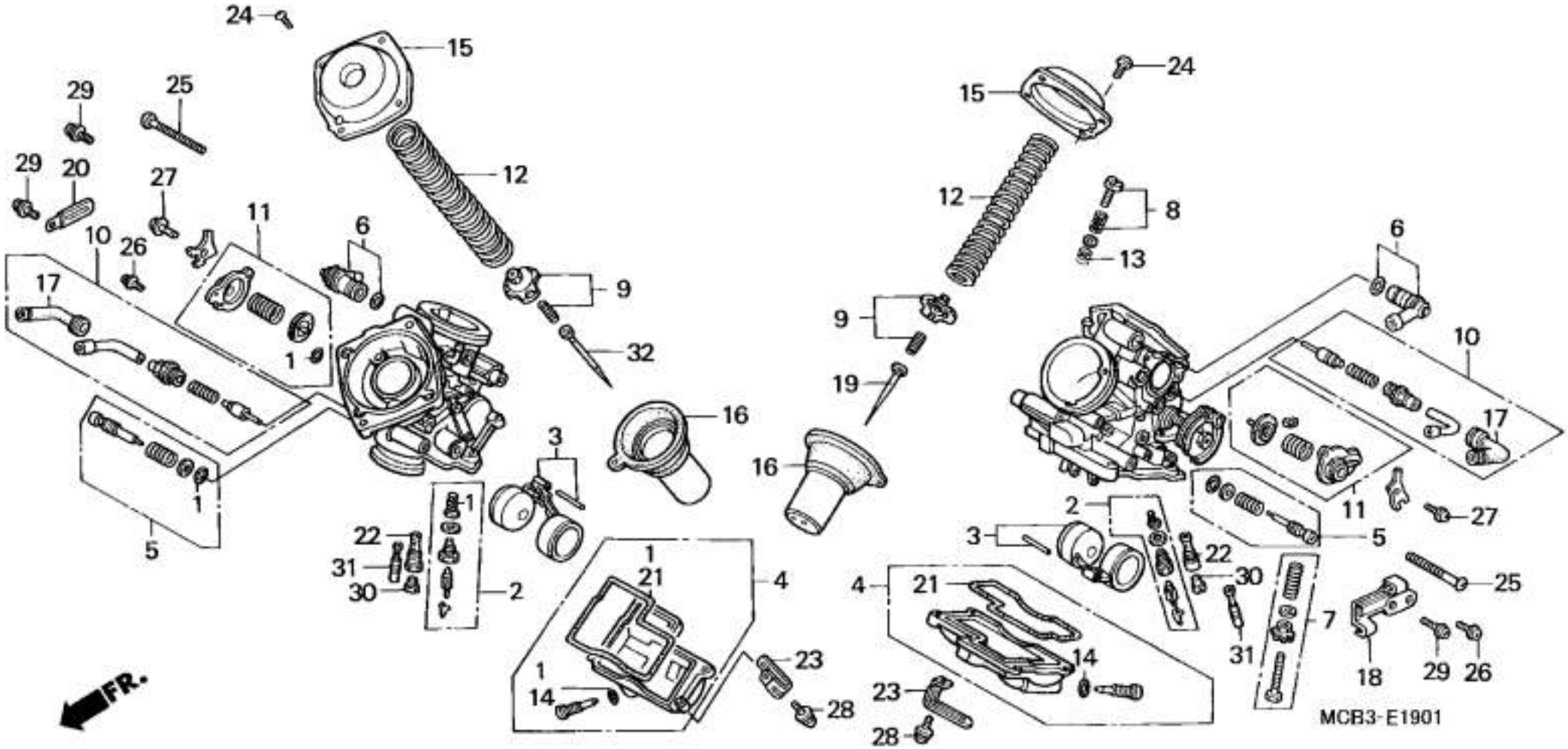
FR.
MCB3-E1901

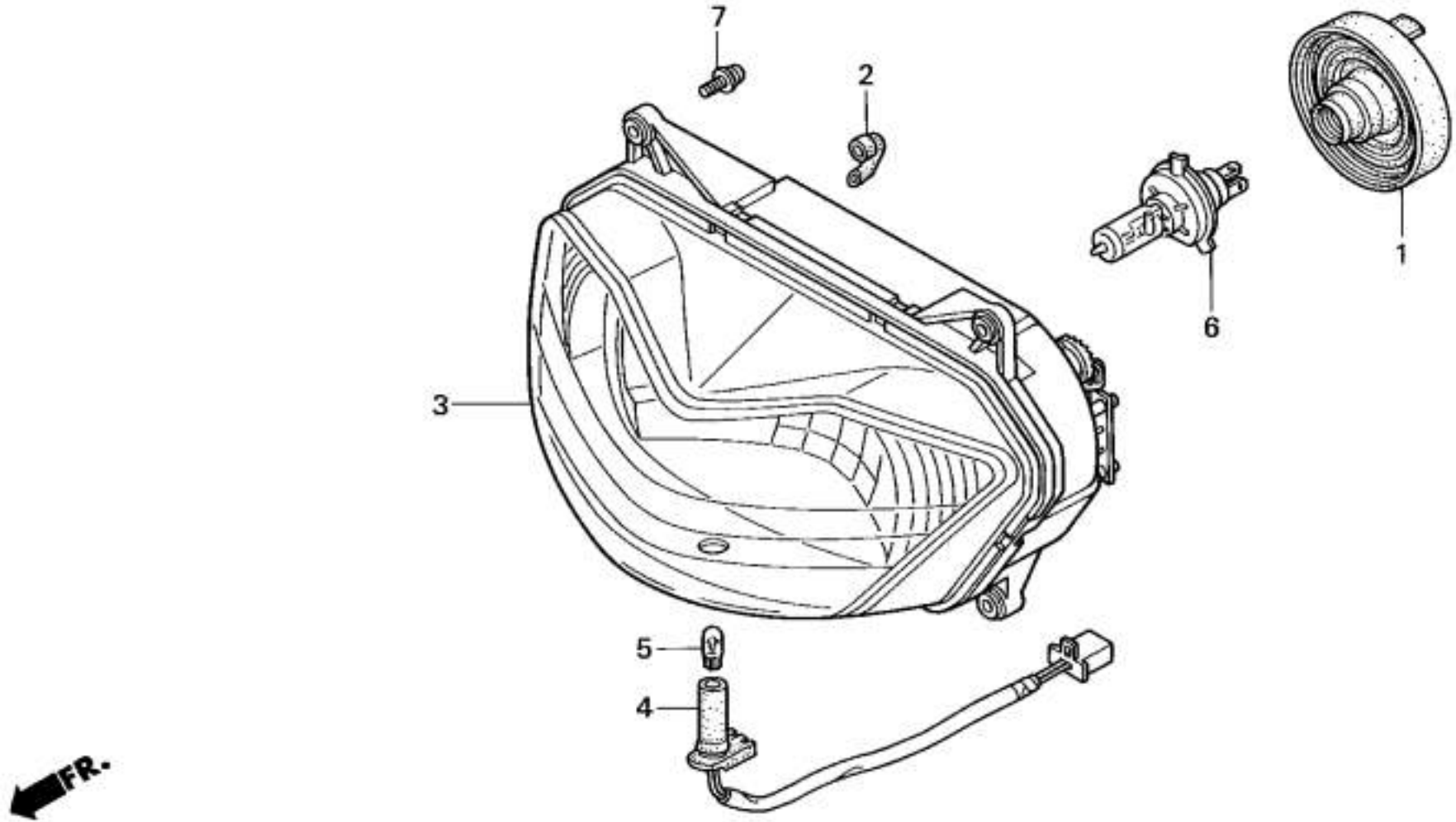

MCB3-F0100

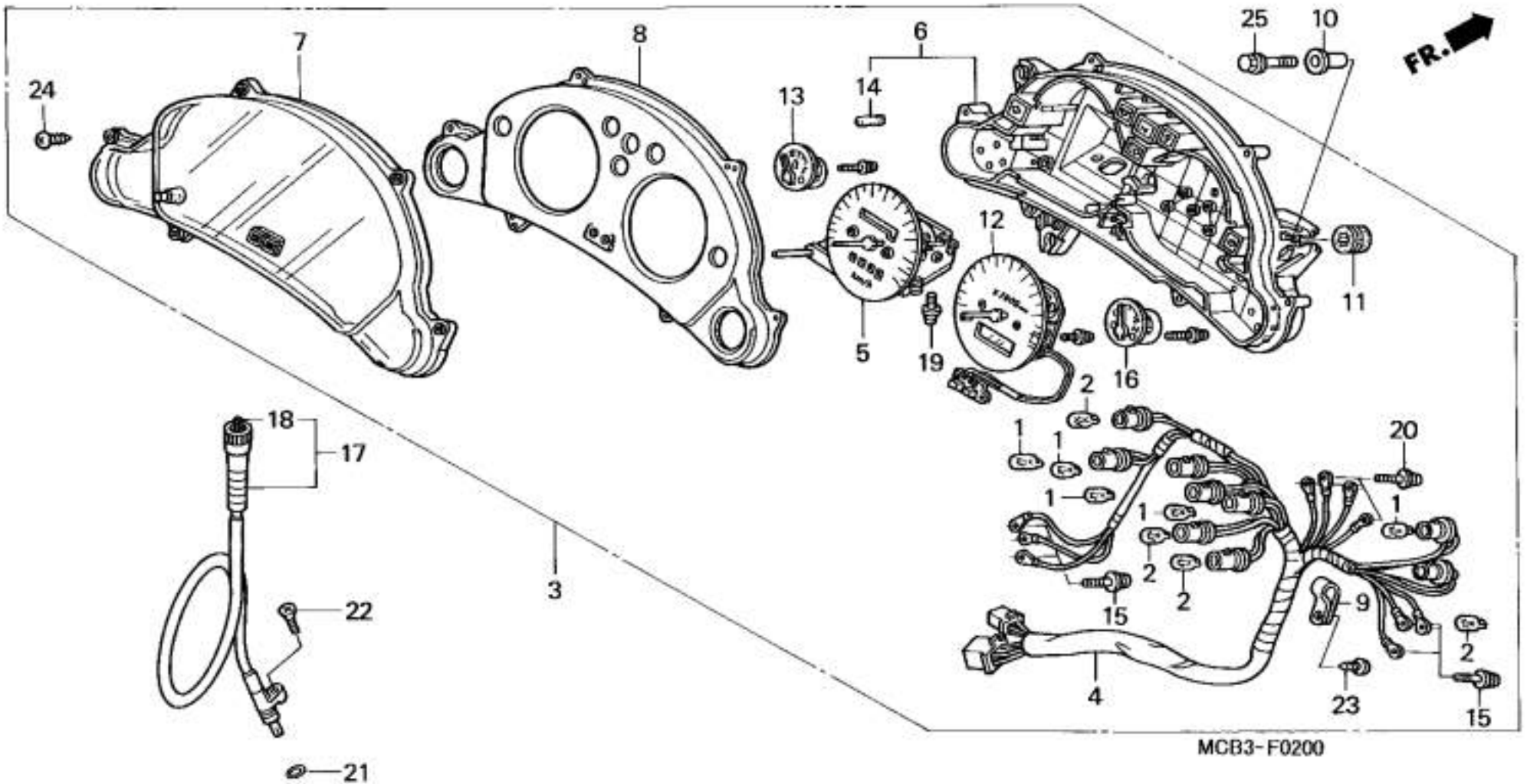

FR.
24
7
8
6
13
14
25
10
12
11
5
19
16
2
1
1
1
1
20
1
2
2
15
9
2
4
23
15
18
17
3
22
21
MCB3-F0200

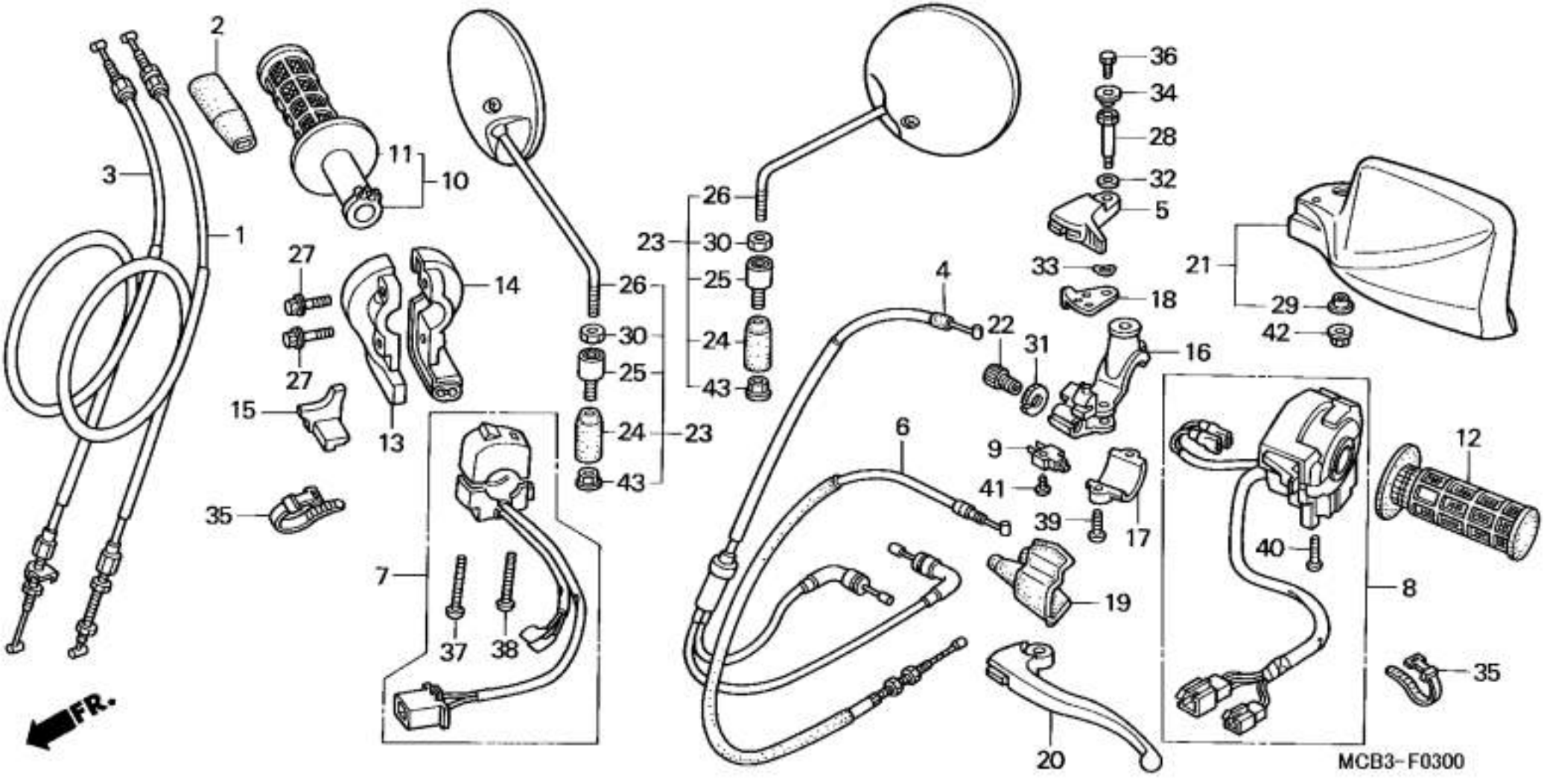
1
2
3
4
5
6
7
8
9
10
11
12
13
14
15
16
17
18
19
20
21
22
23
24
25
26
27
28
29
30
31
32
33
34
35
36
37
38
39
40
41
42
43
FR.
MCB3-F0300

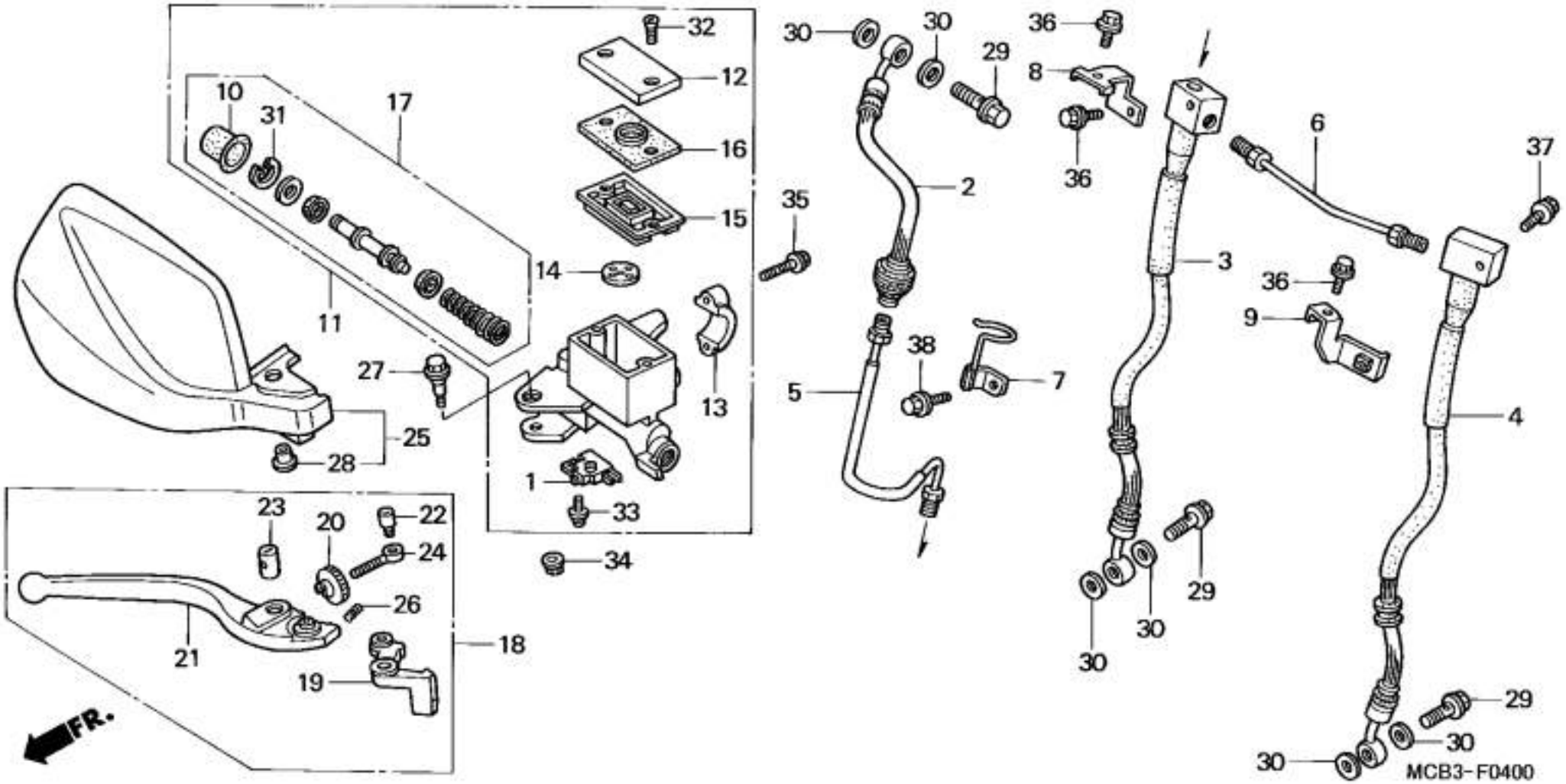
32
12
16
15
10
31
17
14
11
27
13
25
28
1
33
34
23
20
22
24
26
21
19
18
FR.
30
30
29
35
2
5
38
7
36
8
36
6
37
3
36
9
4
30
30
29
30
30
29
30
MCB3-F0400

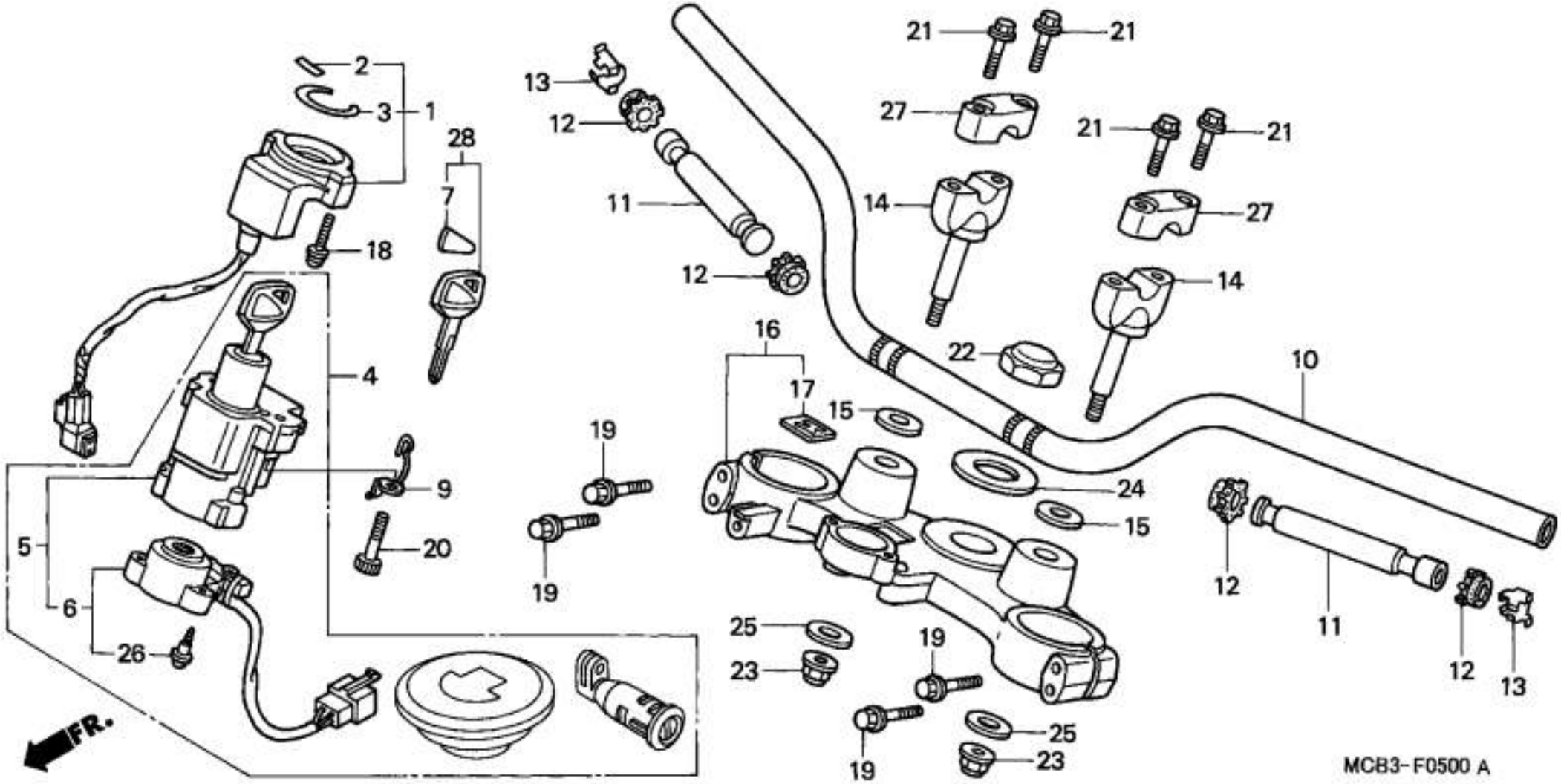
1
2
3
4
5
6
7
9
10
11
12
13
14
15
16
17
18
19
20
21
22
23
24
25
26
27
28
FR.
MCB3-F0500 A

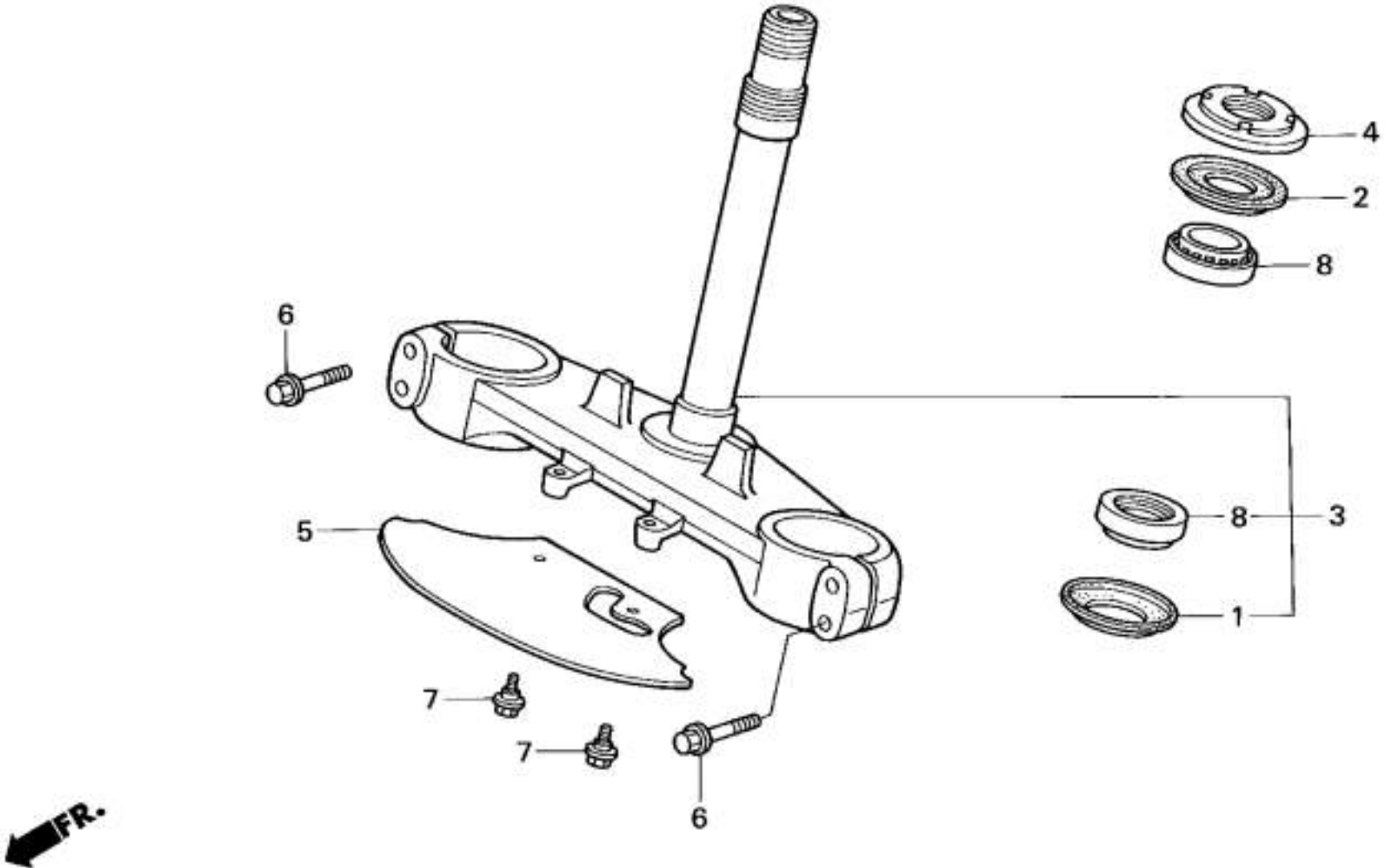

MCB3-F0600

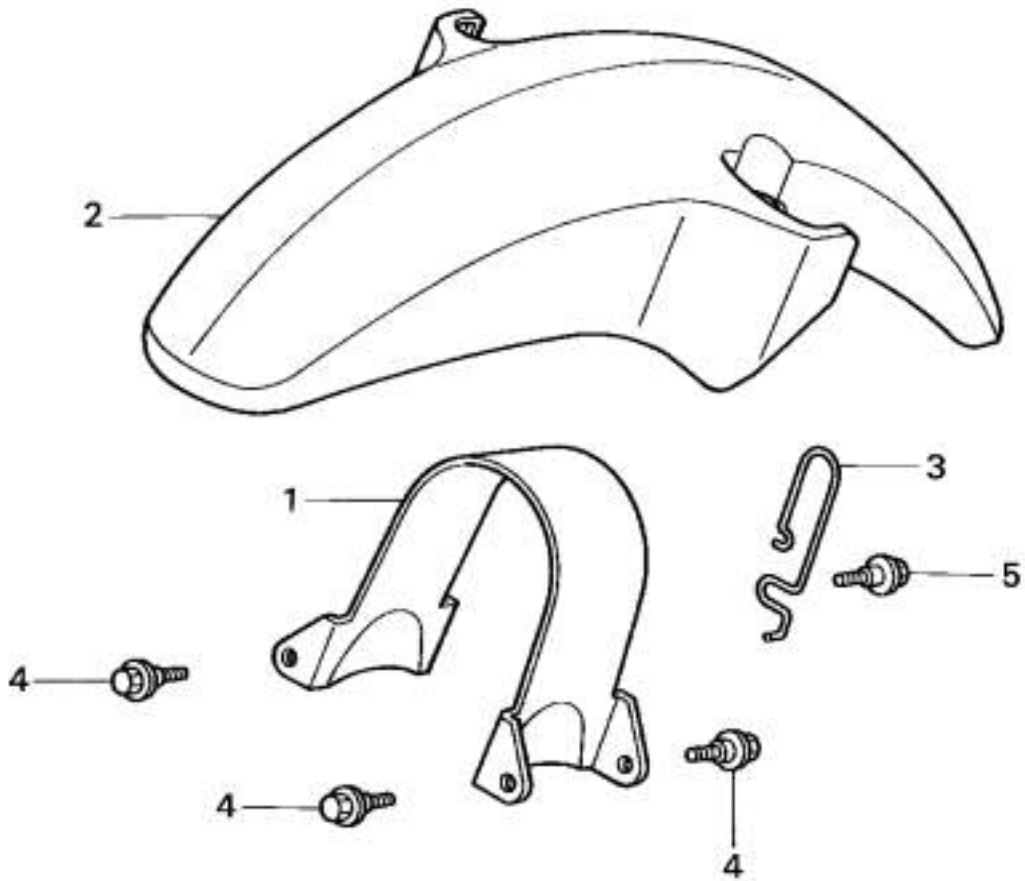

MCB3-F0700

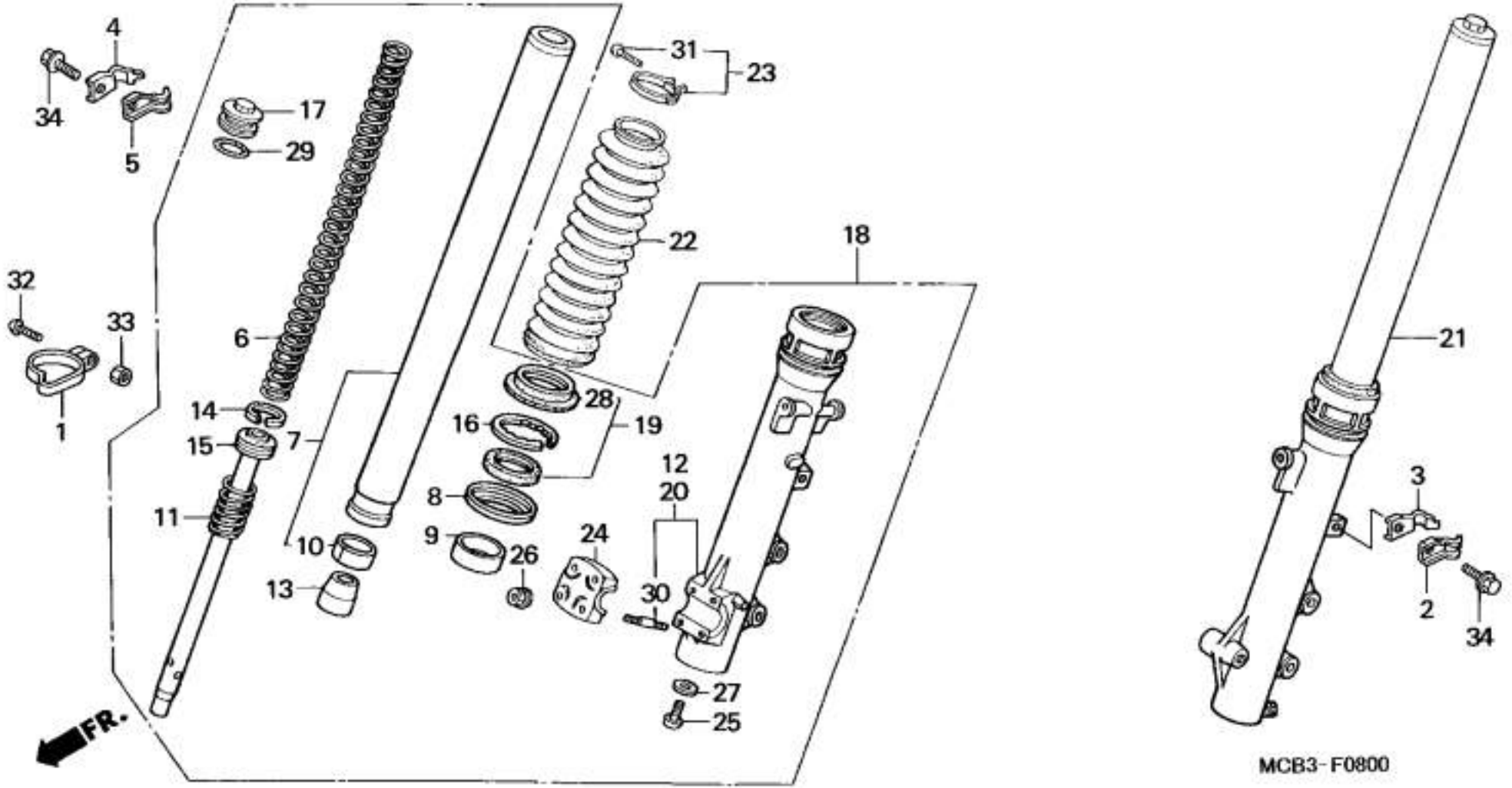

4
34
5
17
29
31
23
22
18
32
33
6
1
14
15
7
28
16
19
12
20
8
11
10
9
26
24
13
30
27
25
FR.
21
3
2
34
MCB3-F0800

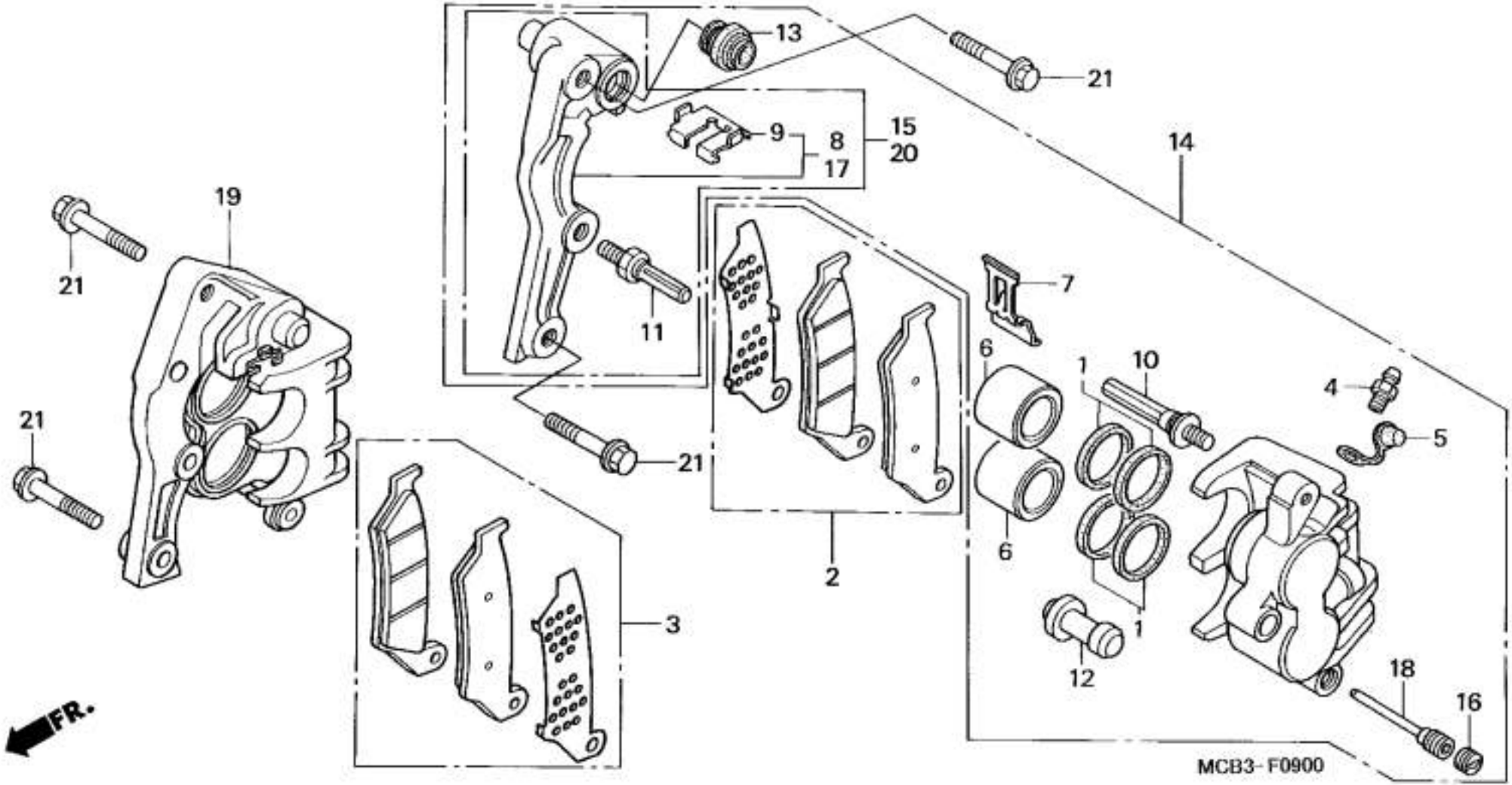
13
21
9
8
17
15
20
14
19
21
11
7
6
1
10
4
5
21
21
6
2
1
3
12
18
16
FR.
MCB3-F0900

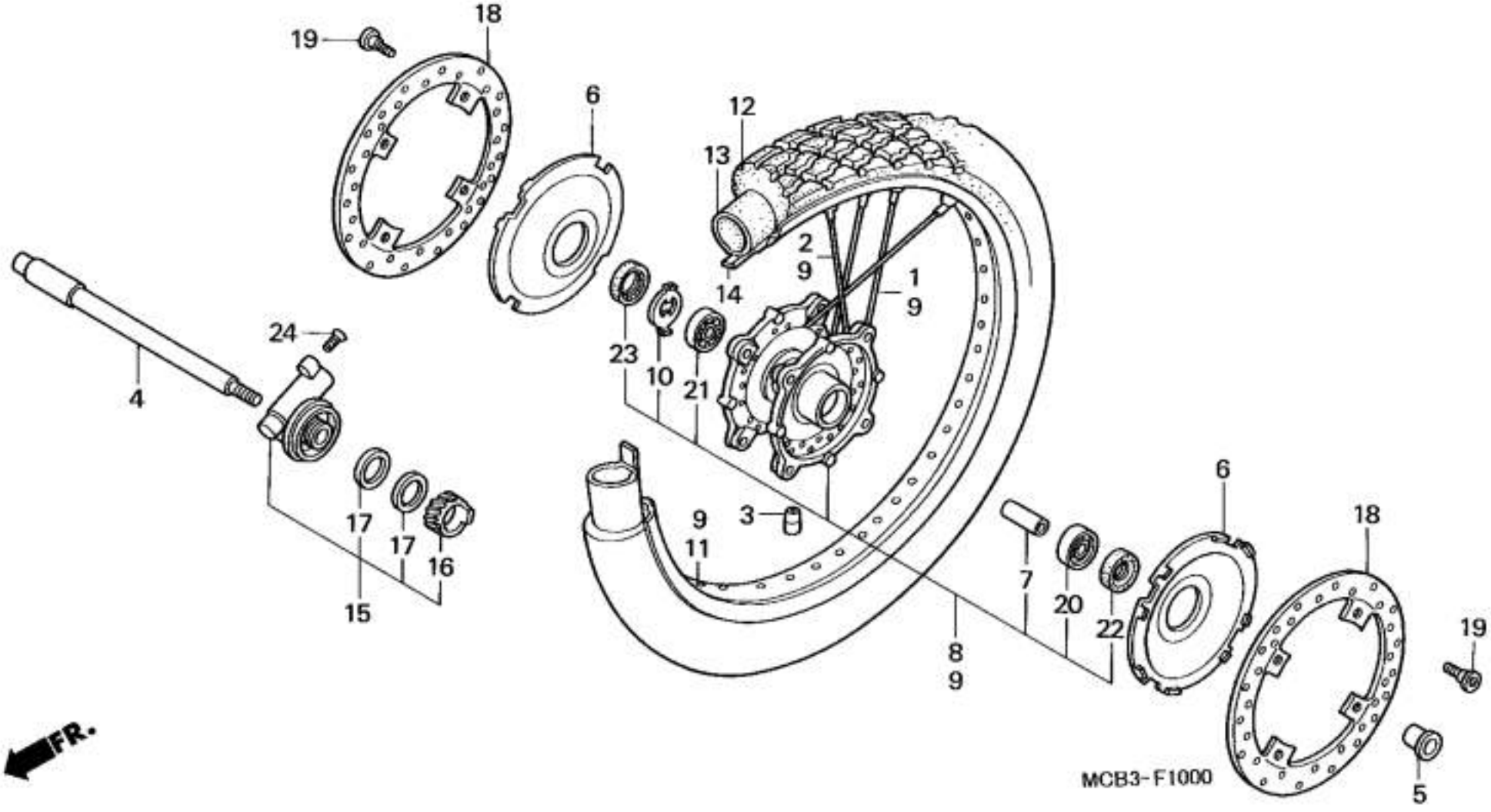
19
18
6
12
13
2
9
1
9
14
24
4
23
10
21
17
17
16
15
9
11
3
8
9
7
20
22
6
18
19
5
FR.
MCB3-F1000

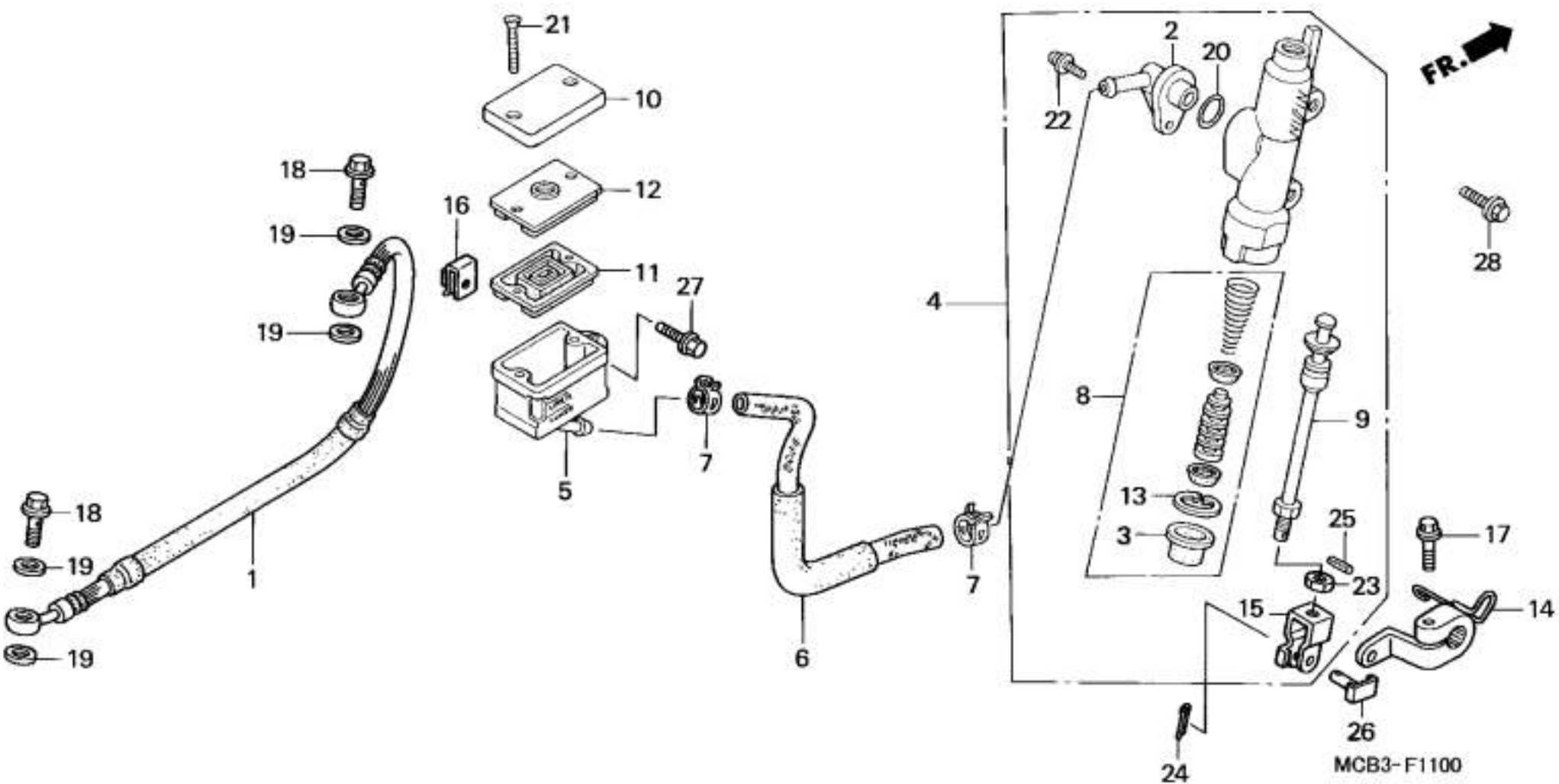
FR.
MCB3-F1100

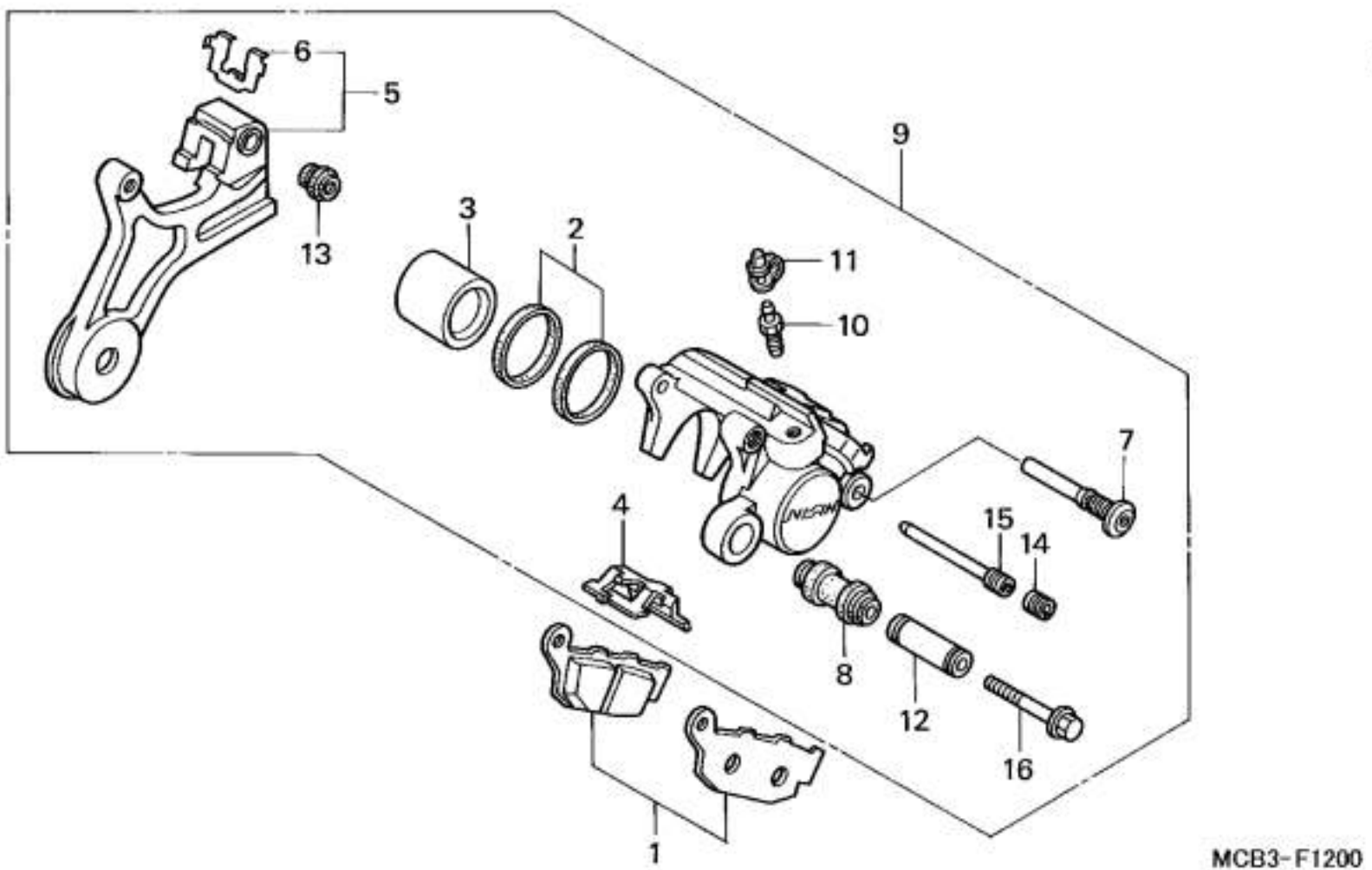
FR.
6
5
9
13
3
2
11
10
7
4
15
14
8
12
16
1
MCB3-F1200

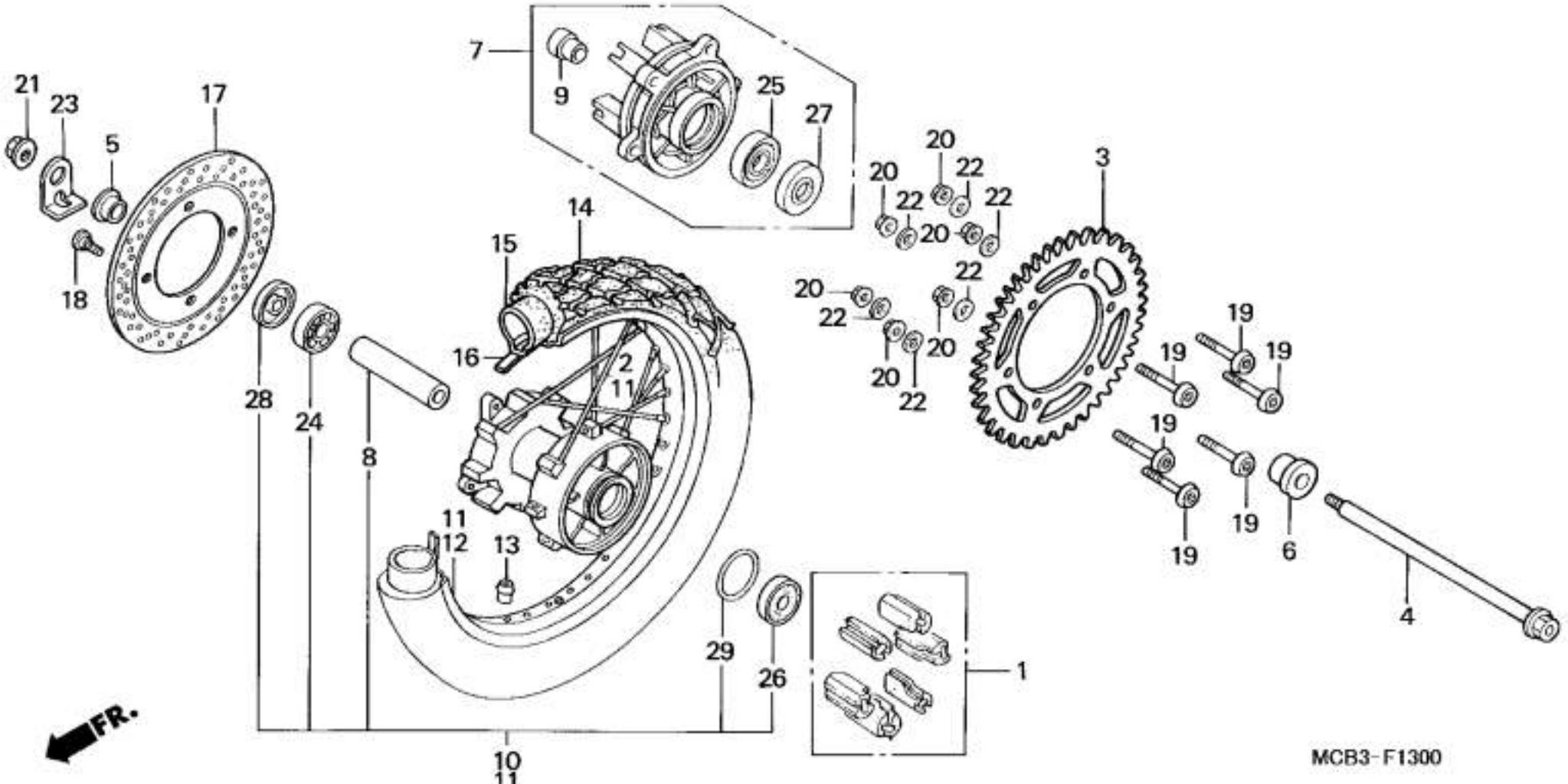
7
9
25
27
21
23
5
17
18
20
22
3
14
15
16
2
11
28
24
8
19
6
4
11
12
13
29
26
1
10
11
FR.
MCB3-F1300

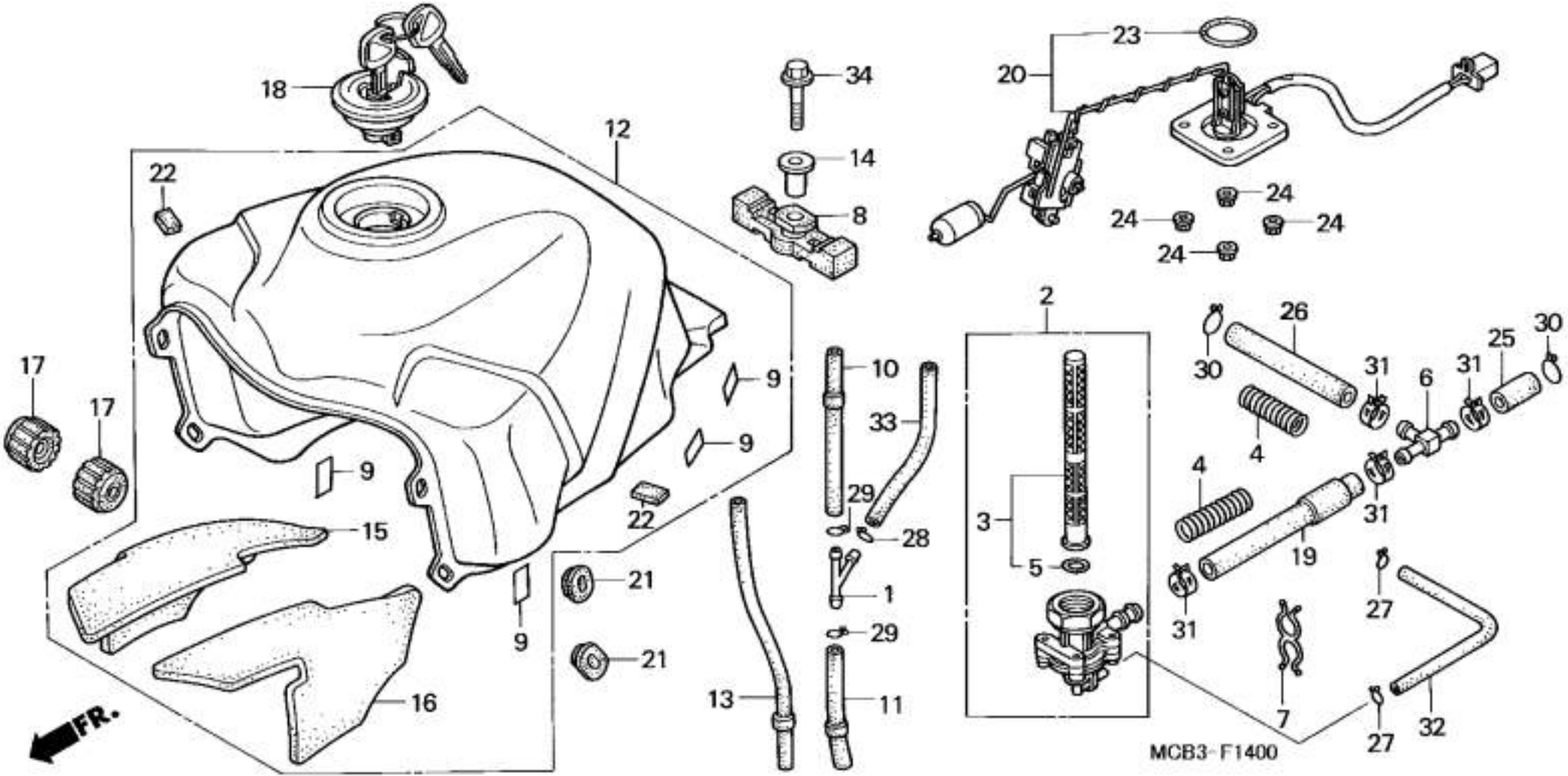

18
12
22
34
14
8
23
20
24
24
24
24
17
17
9
9
9
9
10
33
29
28
1
29
11
13
15
16
21
21
22
FR.
2
3
5
26
30
31
6
31
25
30
4
4
31
19
31
27
7
27
32
MCB3-F1400

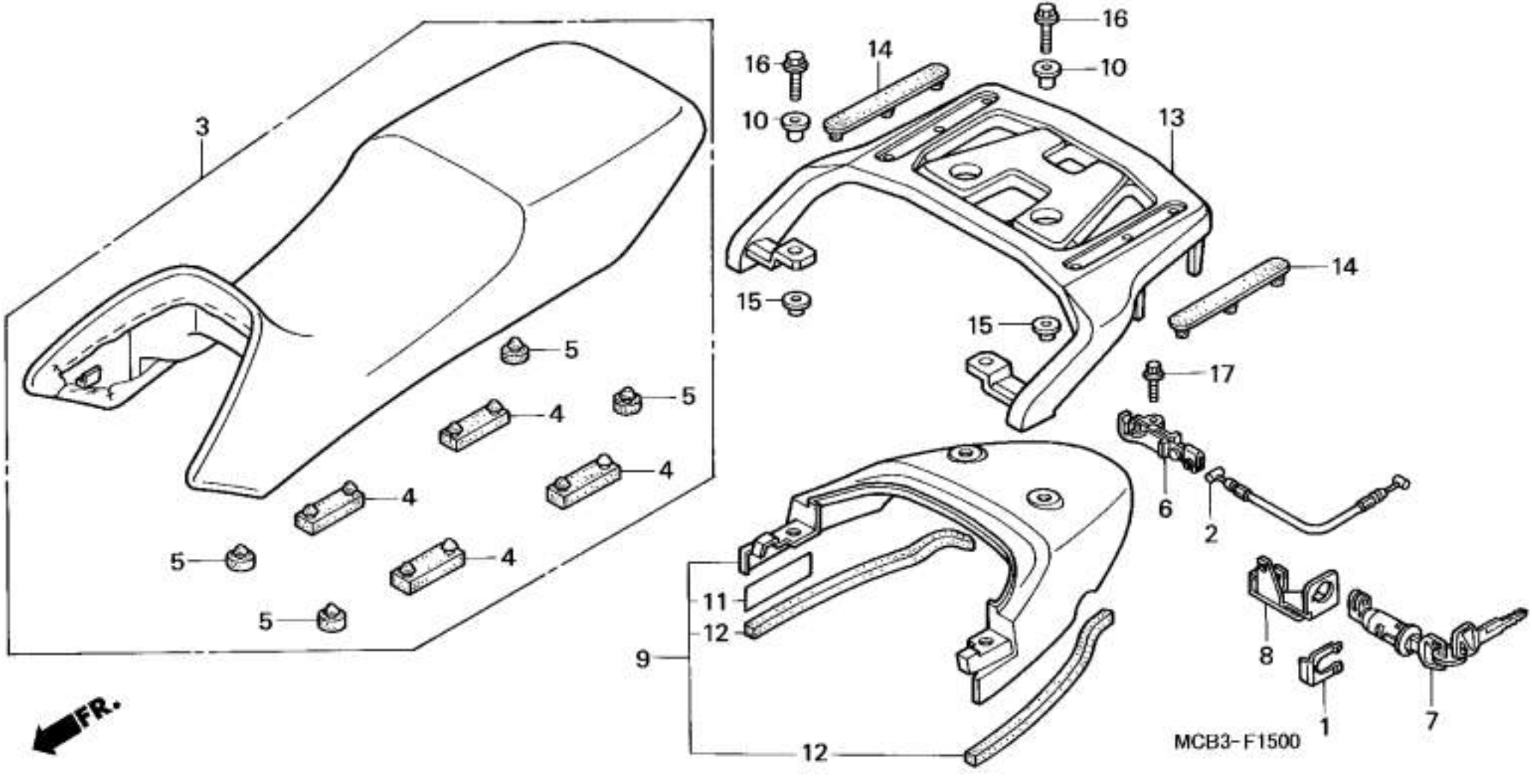

3
5
5
4
4
4
4
5
5
16
16
14
10
10
13
14
15
15
17
6
2
11
12
9
12
8
1
7
FR.
MCB3-F1500

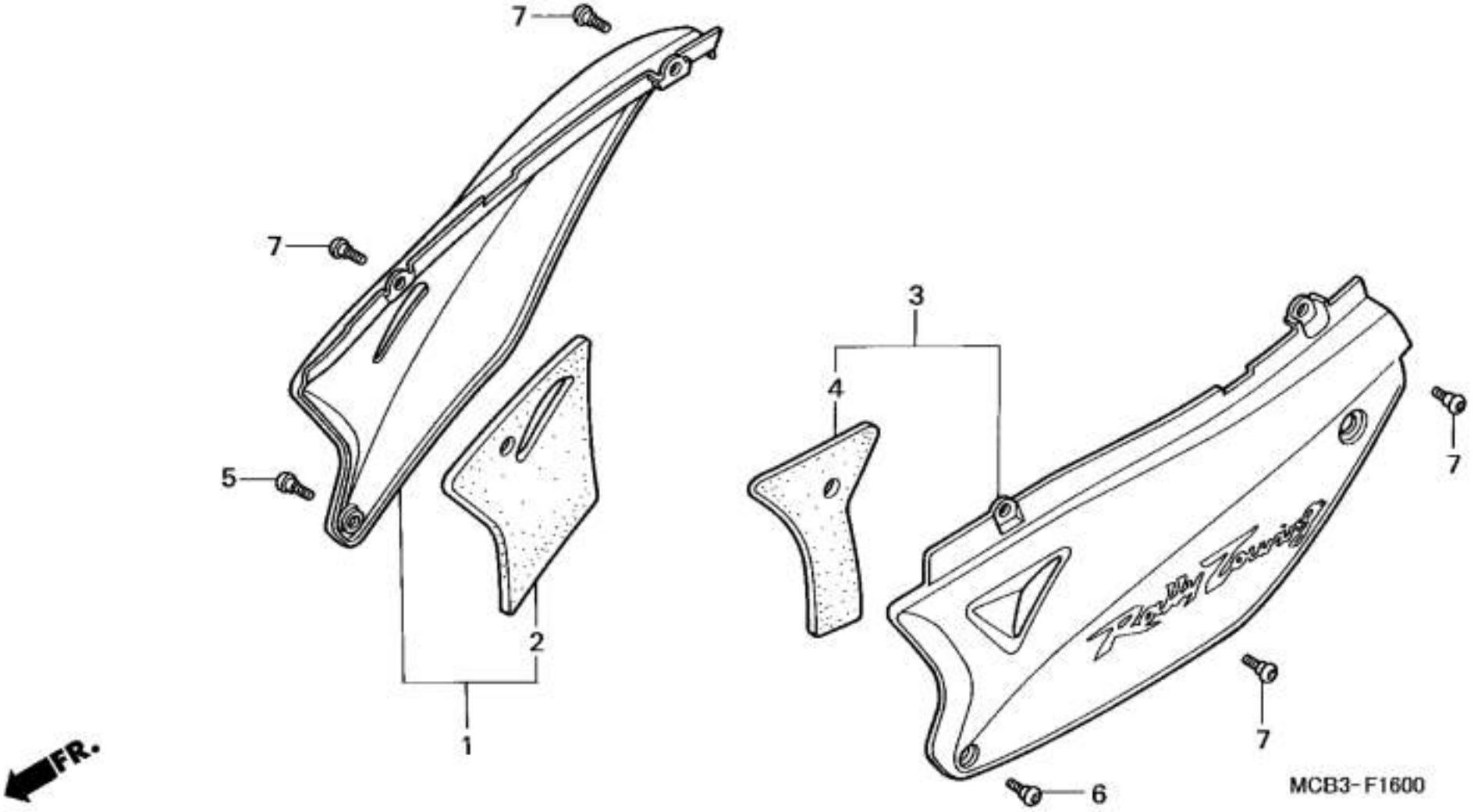
7
7
5
1
2
3
4
7
7
7
6
MCB3-F1600
FR.

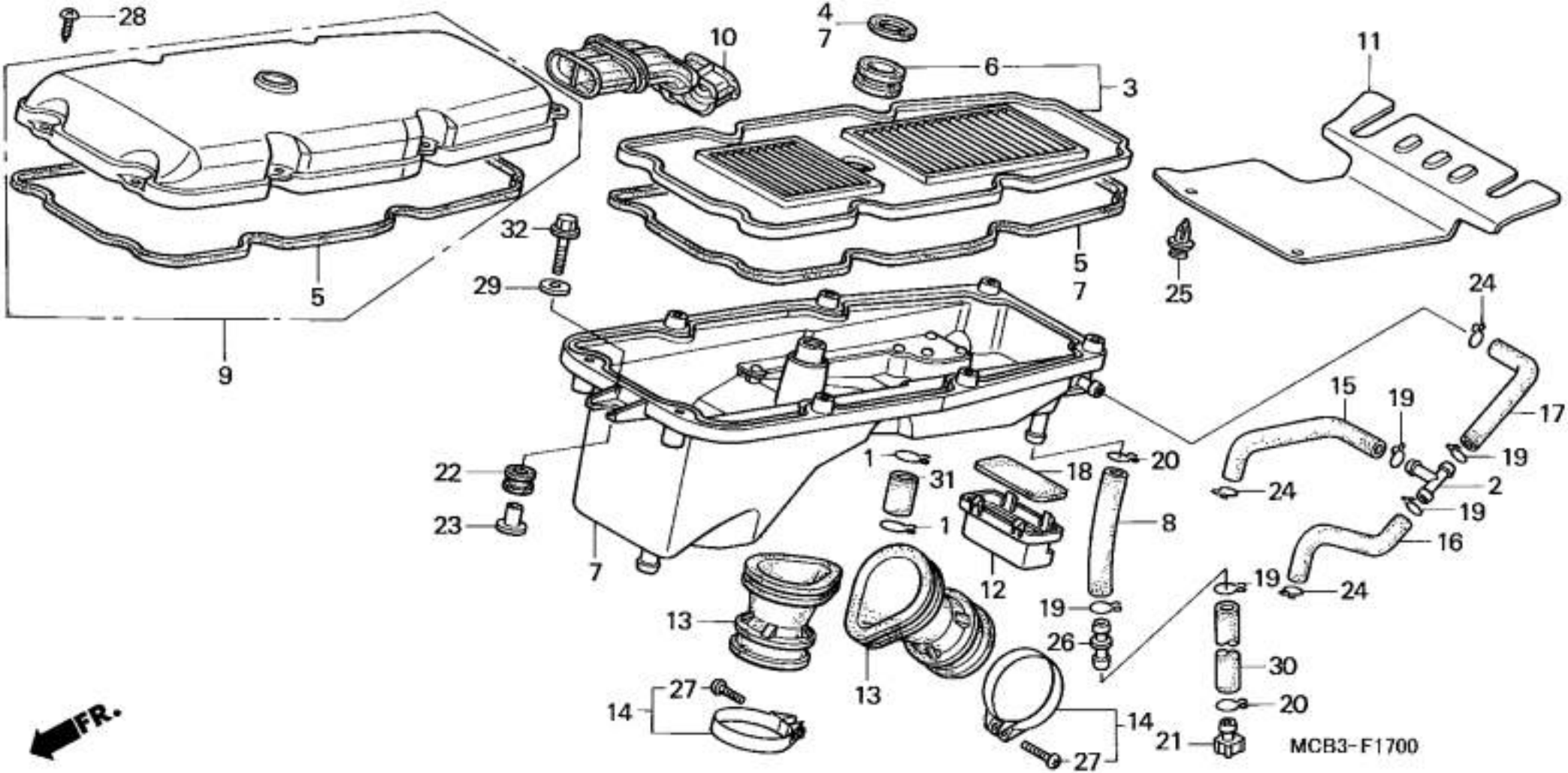
28
10
4
7
6
3
11
32
29
5
9
5
7
25
24
15
19
17
19
2
19
16
24
22
23
1
31
1
18
20
8
12
7
13
13
19
26
19
24
30
20
21
27
14
14
27
FR.
MCB3-F1700

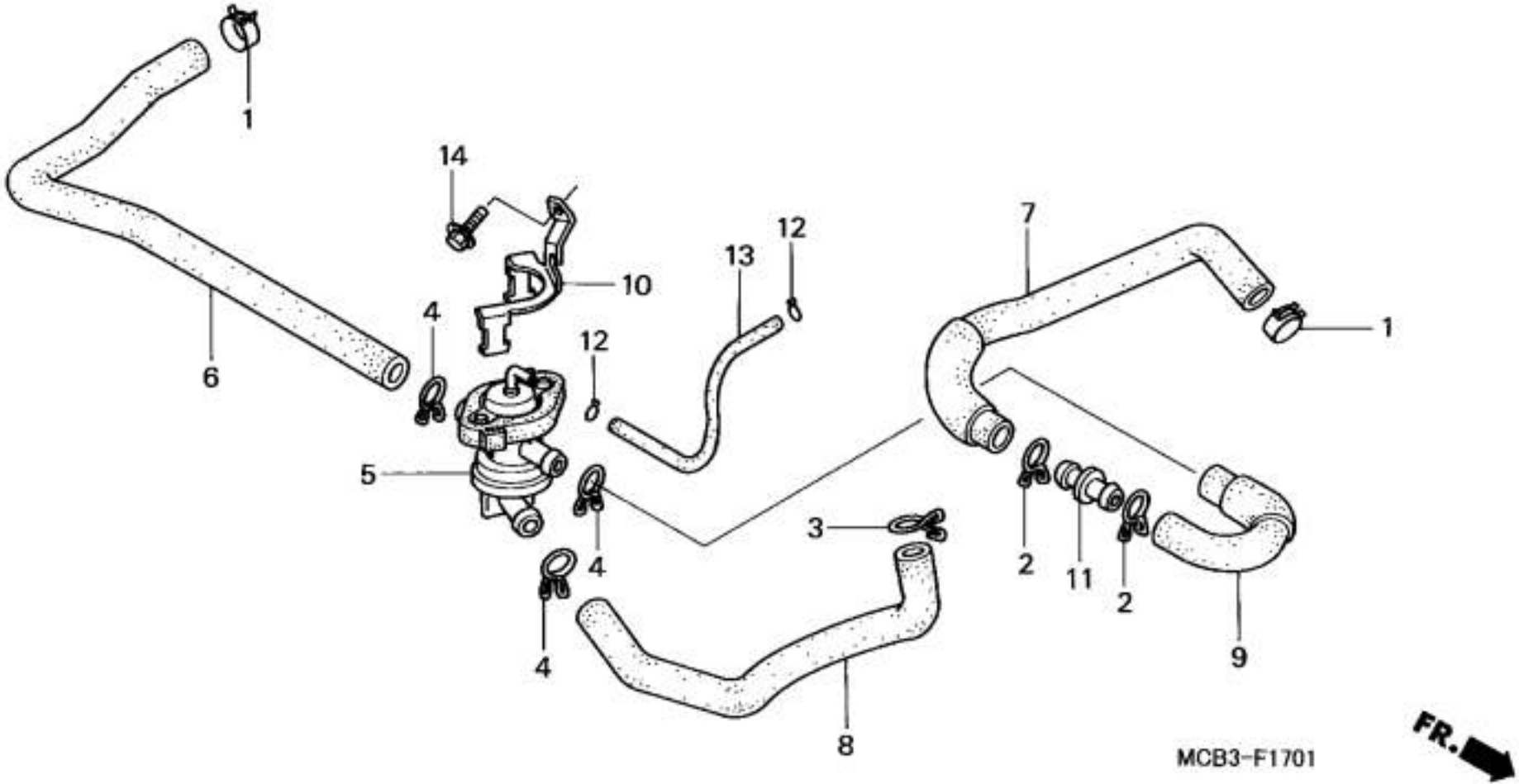
1
14
10
13
12
7
1
4
12
6
5
4
3
2
11
2
9
4
8
MCB3-F1701
FR.

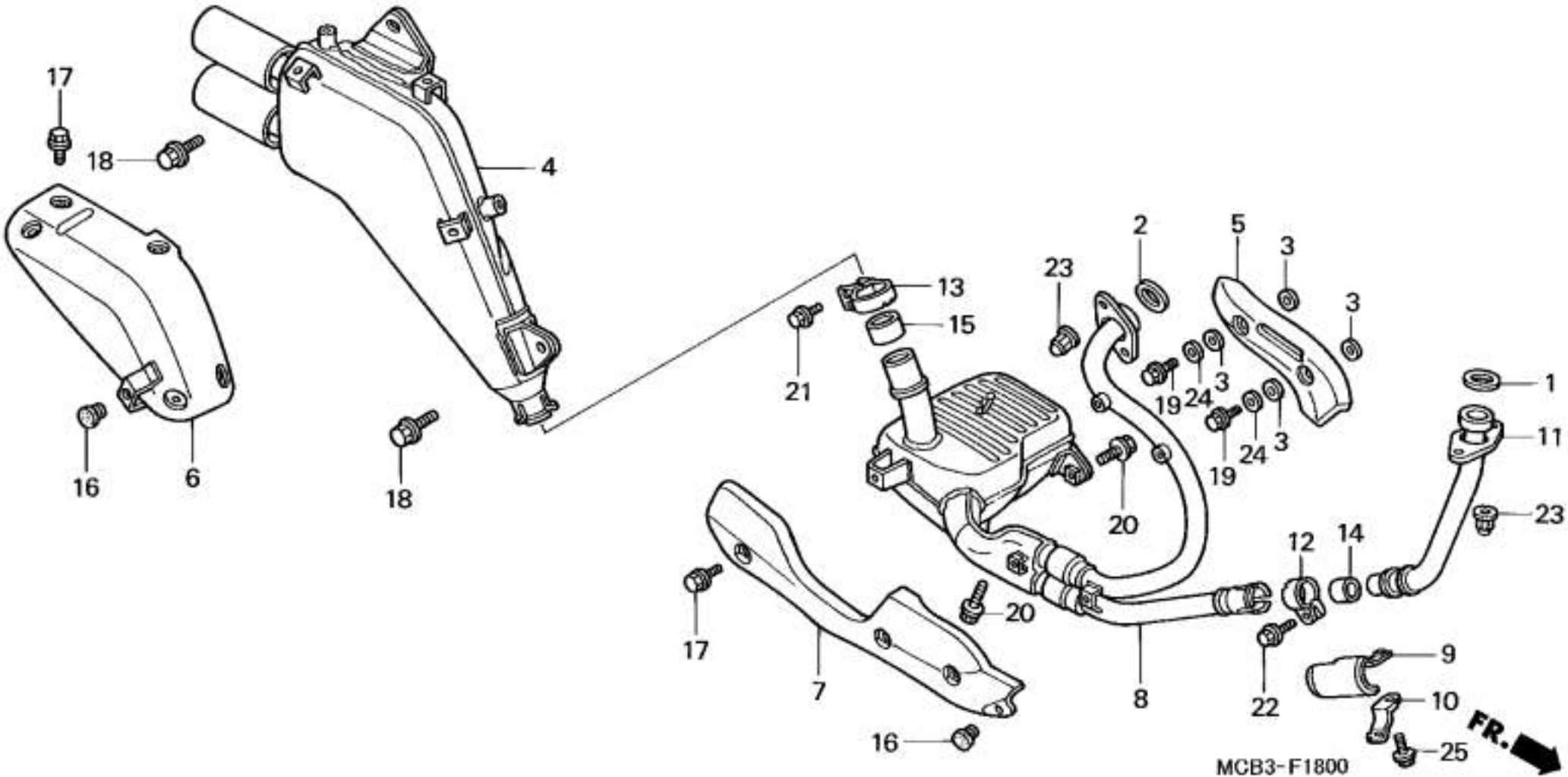
17
18
4
16
6
18
21
13
15
23
2
5
3
3
19
24
3
19
24
3
1
11
20
23
12
14
20
17
7
8
22
9
10
16
25
FR.
MCB3-F1800

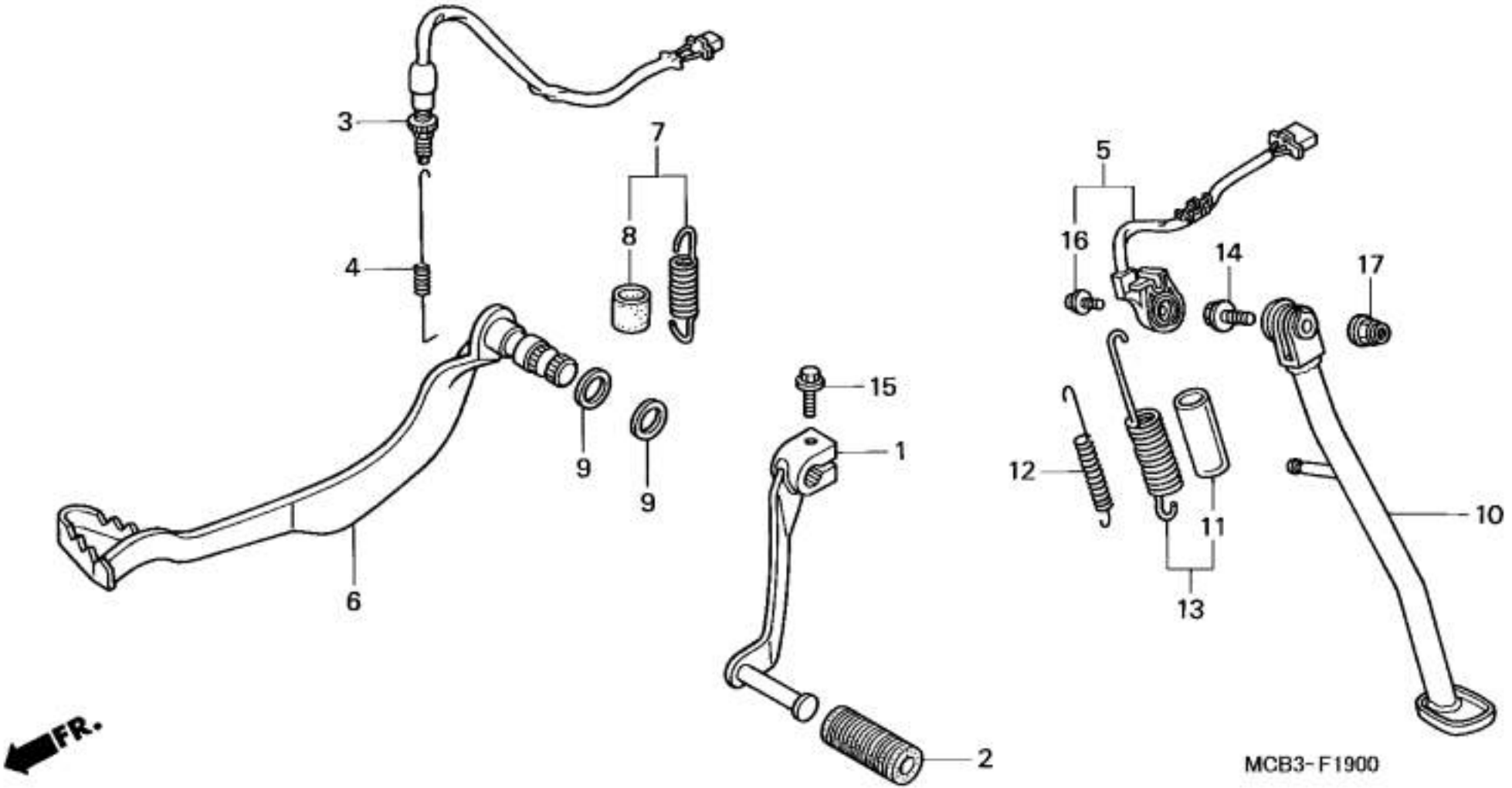
3
4
7
8
9
9
6
15
1
2
5
16
14
17
12
11
13
10
FR.
MCB3-F1900

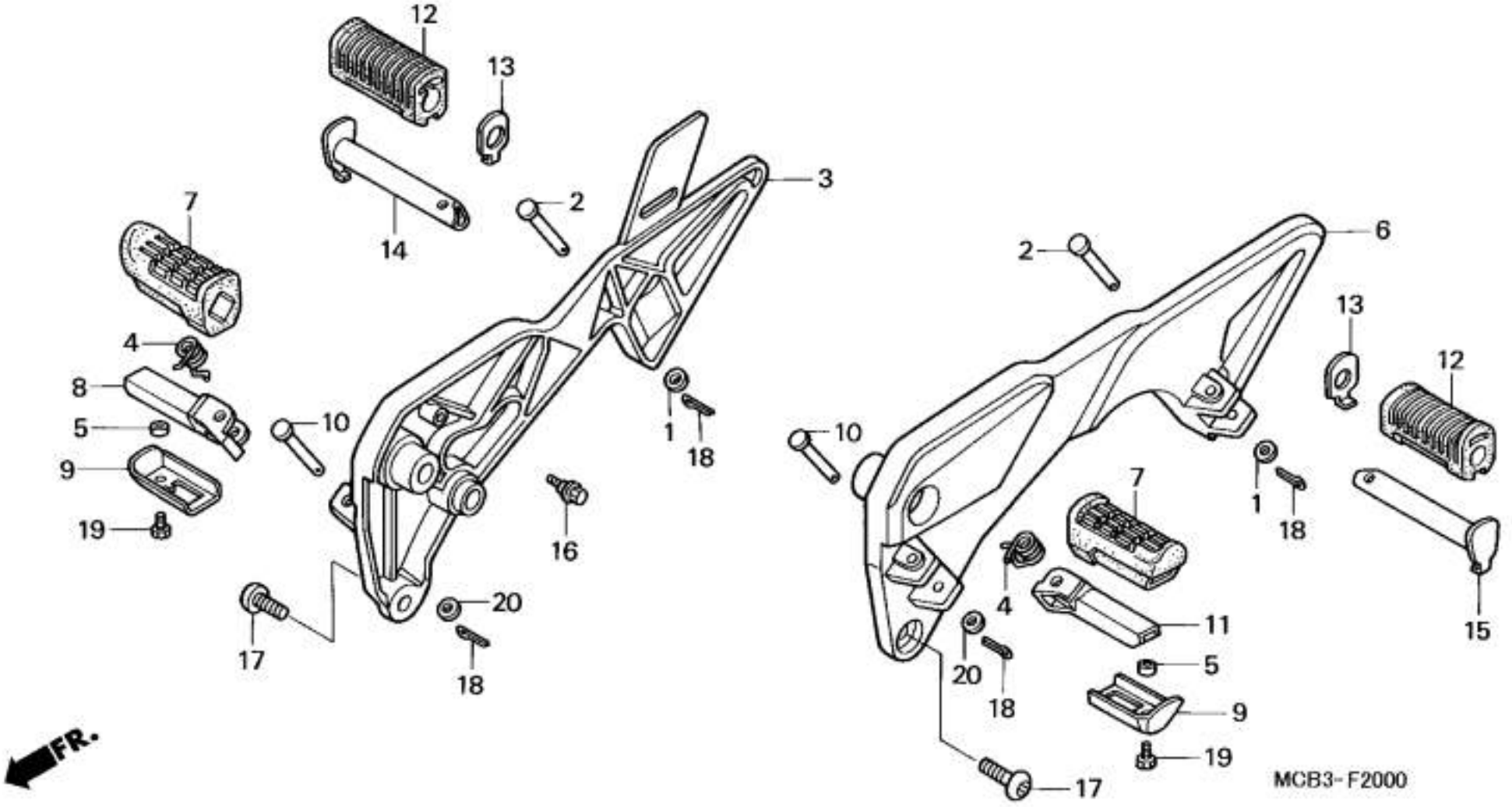
12
13
14
2
3
7
4
8
5
9
19
10
1
18
16
17
20
18
FR.
2
6
13
12
10
1
18
7
4
11
20
18
5
9
19
17
15
MCB3-F2000

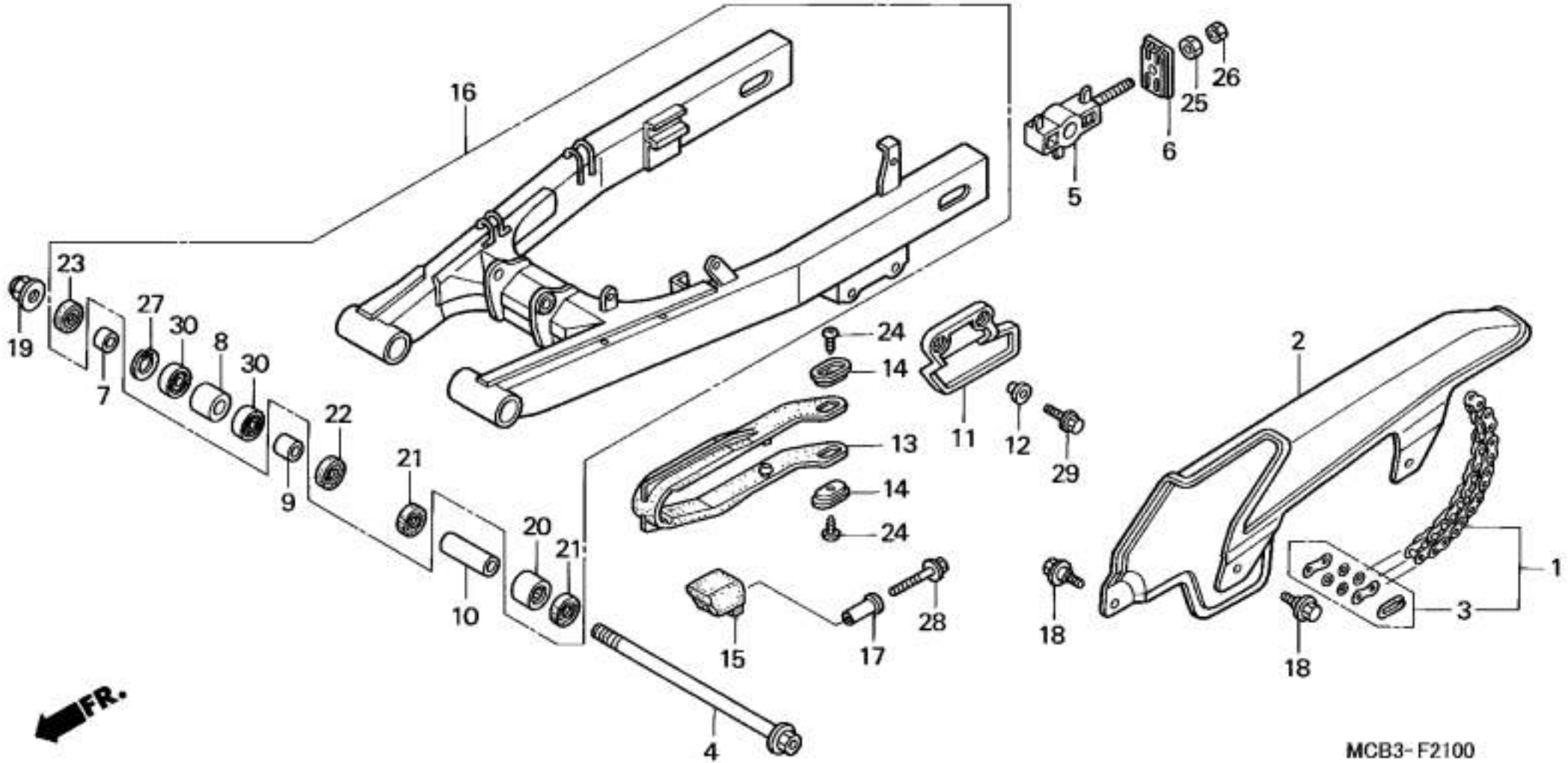
16
5
6
25
26
23
19
27
30
8
30
7
22
9
21
21
20
10
24
14
13
14
24
11
12
29
2
1
3
18
18
15
17
28
4
FR.
MCB3-F2100

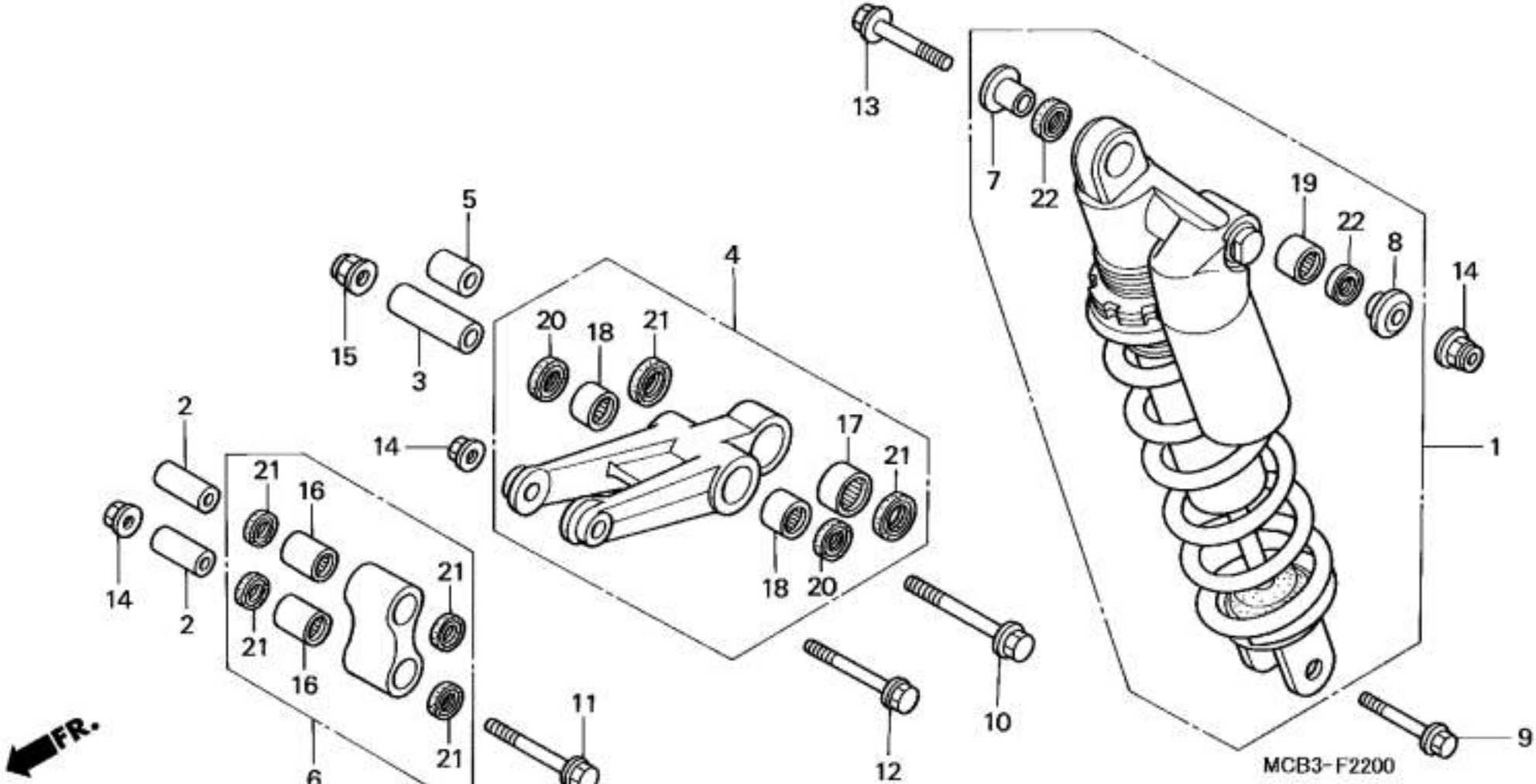
13
7
22
19
22
8
14
1
5
15
3
4
20
18
21
14
17
21
18
20
2
14
2
21
16
21
21
16
21
6
11
12
10
9
FR.
MCB3-F2200

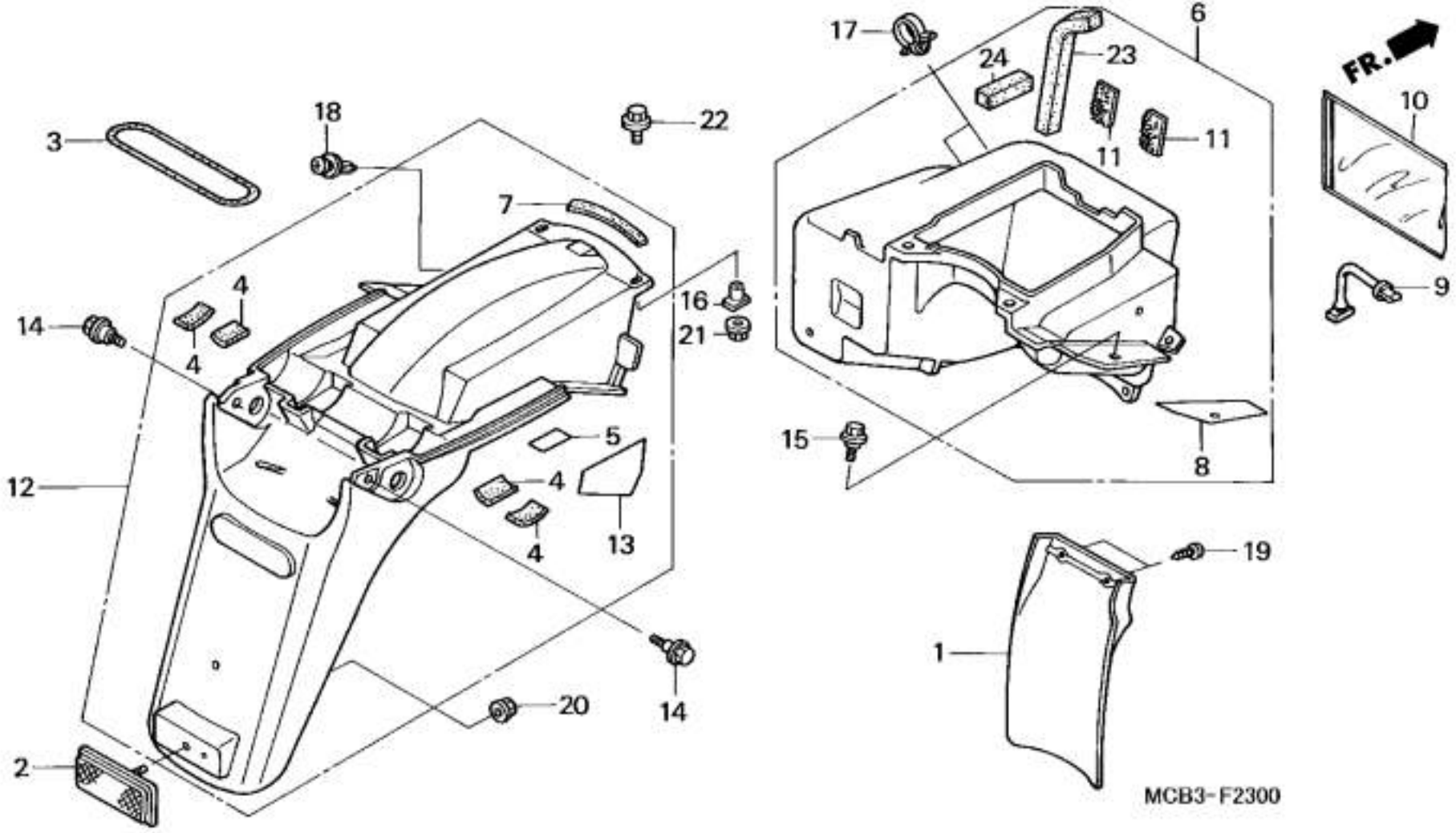
FR.
MCB3-F2300

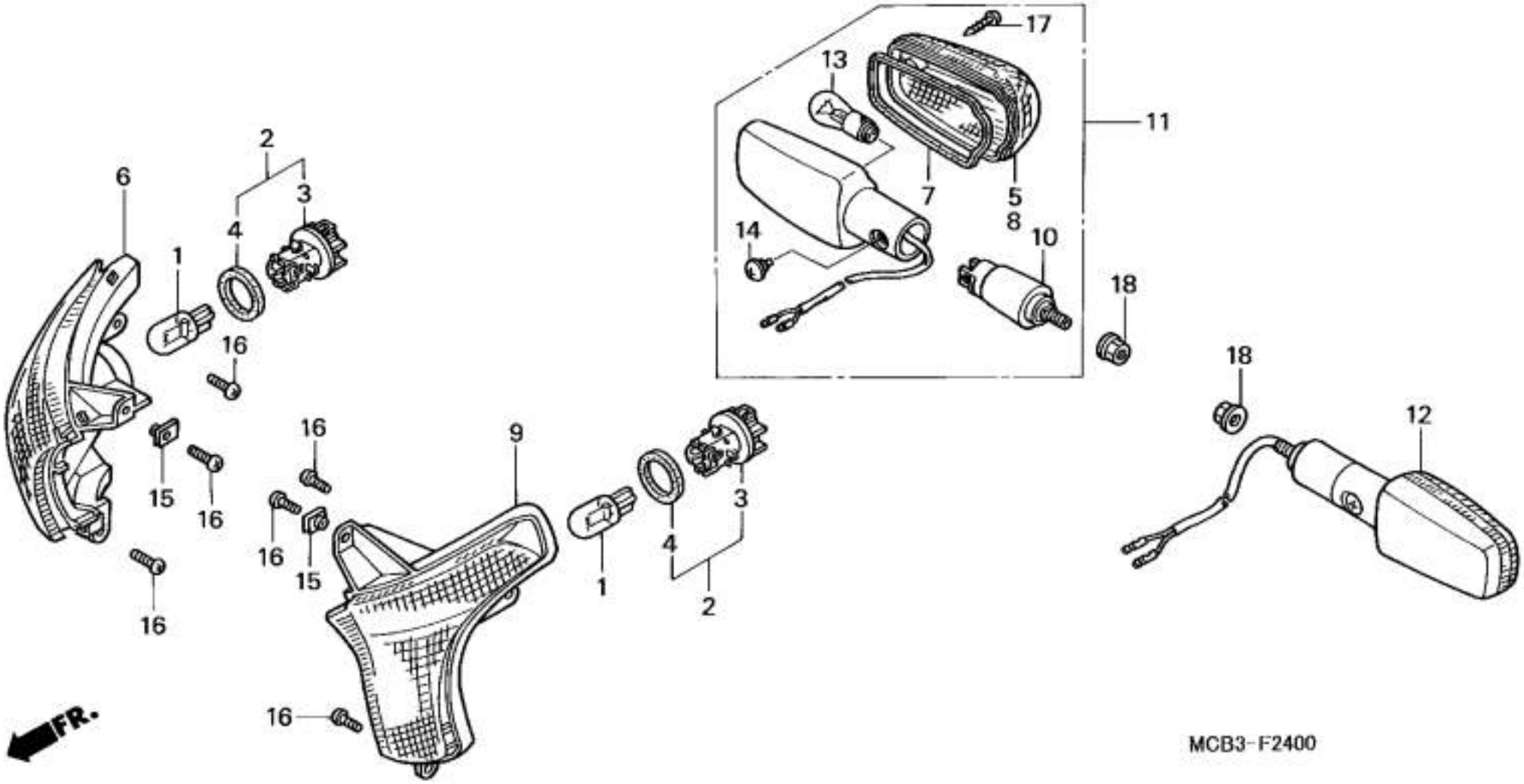

17
13
11
2
6
3
4
1
7
5
8
14
10
18
16
18
12
16
9
15
16
3
16
15
4
1
2
16
16
FR.
MCB3-F2400

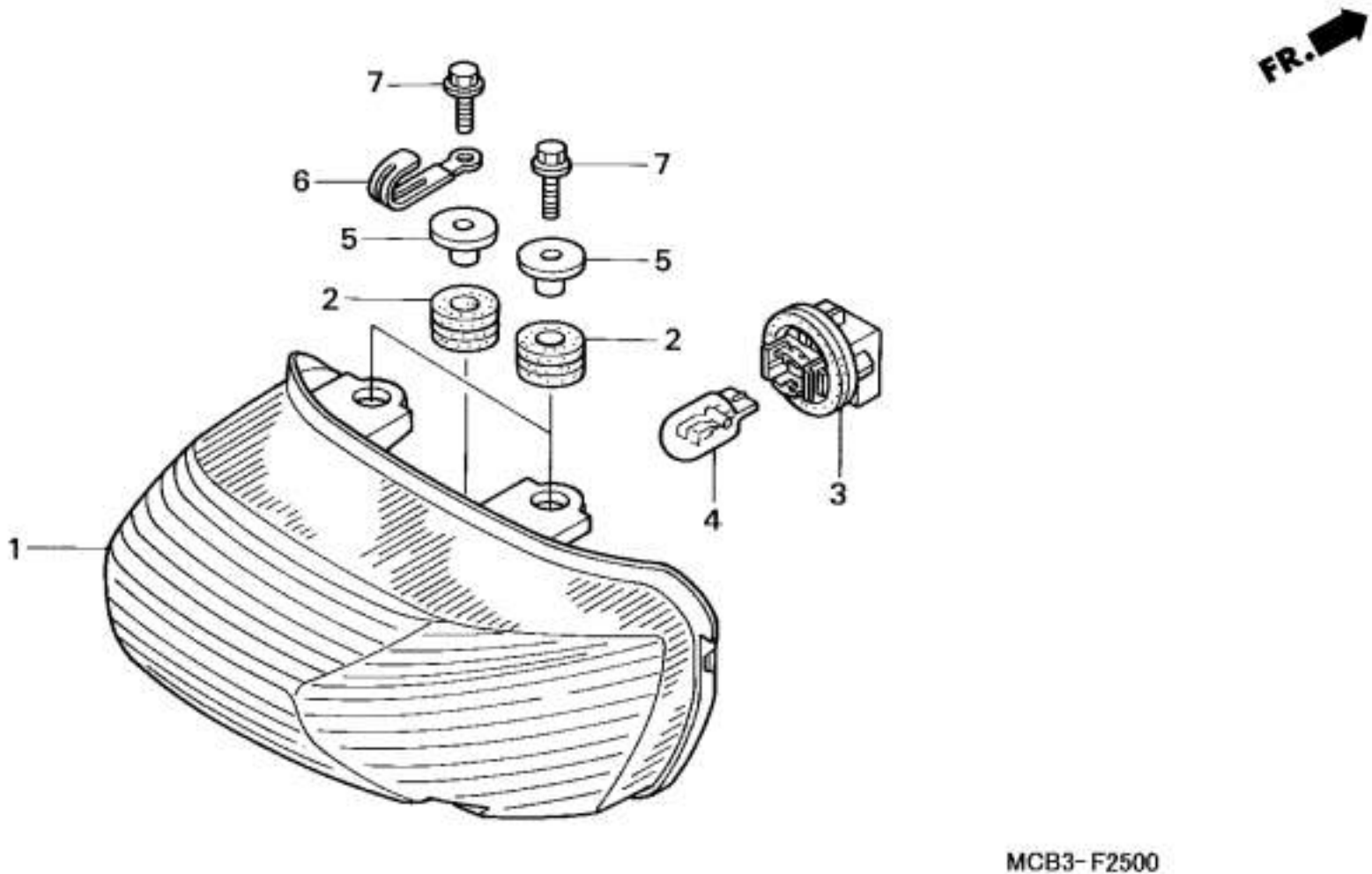
FR.
7
7
6
5
5
2
2
4
3
1
MCB3-F2500

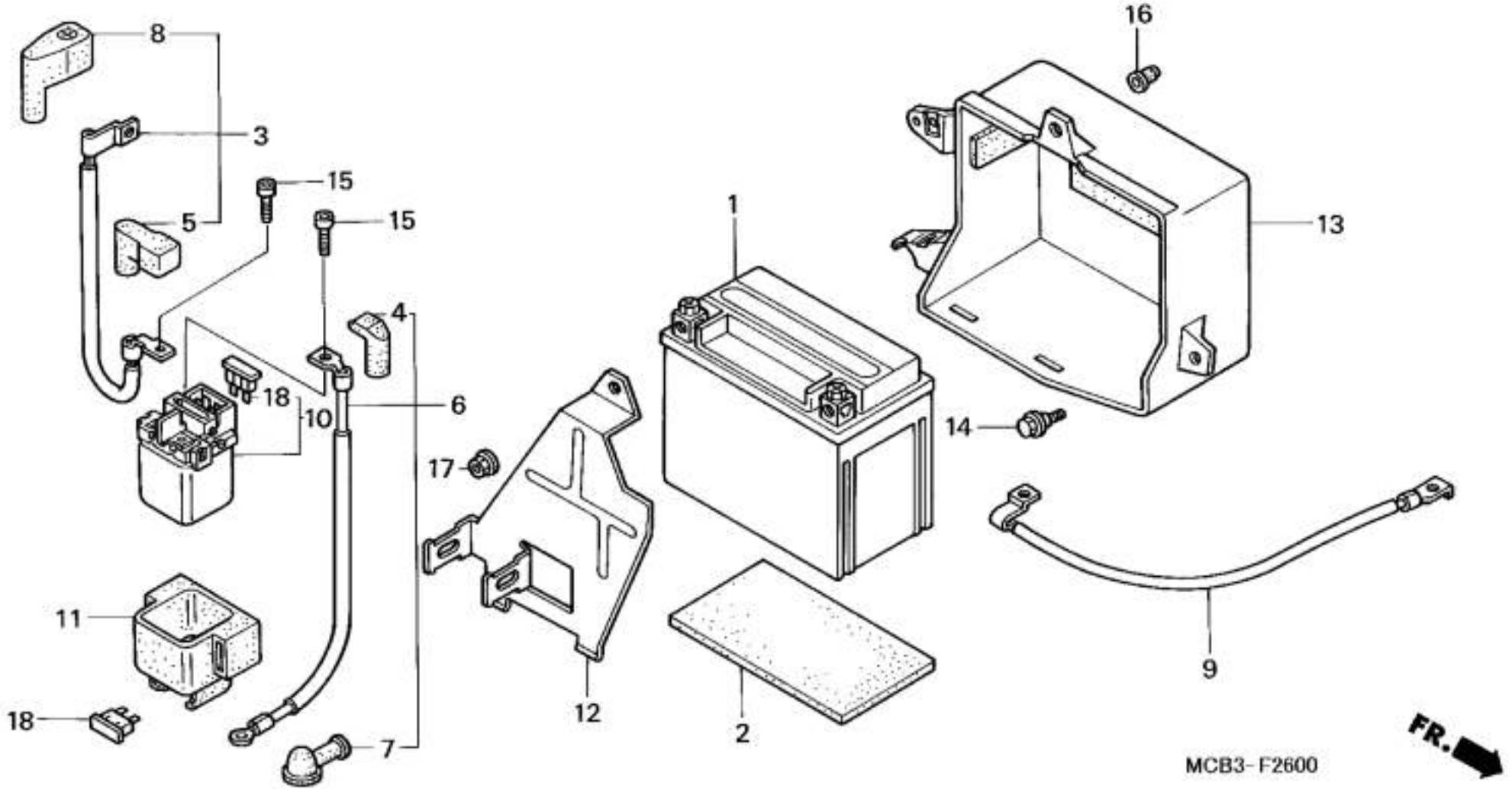
8
3
5
15
15
4
18
10
6
17
11
18
7
12
1
2
16
13
14
9
FR.
MCB3-F2600

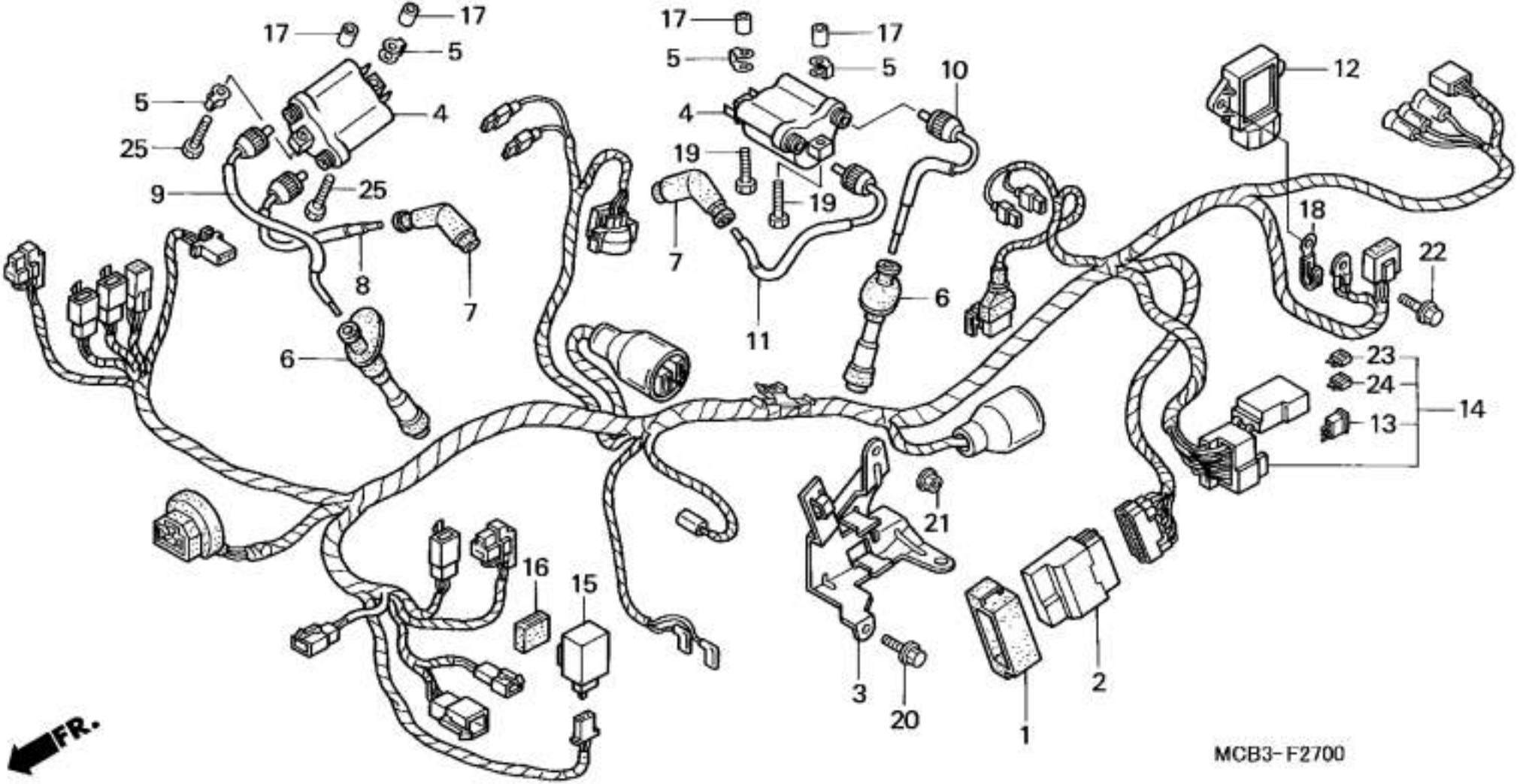
17
17
17
17
5
5
5
5
4
4
10
12
25
25
19
19
9
18
22
8
7
7
11
6
6
23
24
13
14
21
16
15
3
20
2
1
FR.
MCB3-F2700

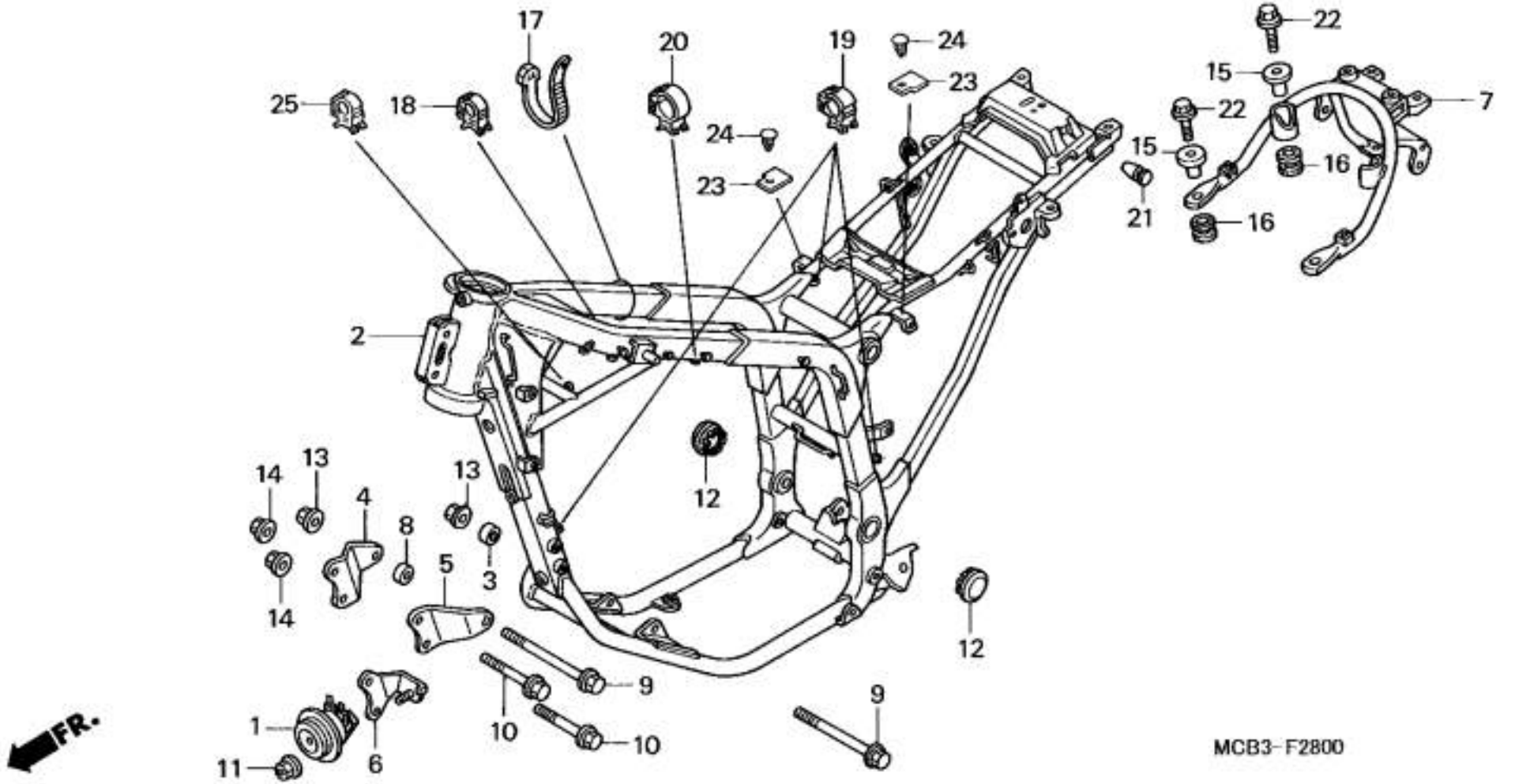
17
20
19
24
22
25
18
23
15
7
24
22
23
15
16
21
16
2
12
14
13
13
4
8
5
3
14
12
9
9
1
10
10
11
6
FR.
MCB3-F2800

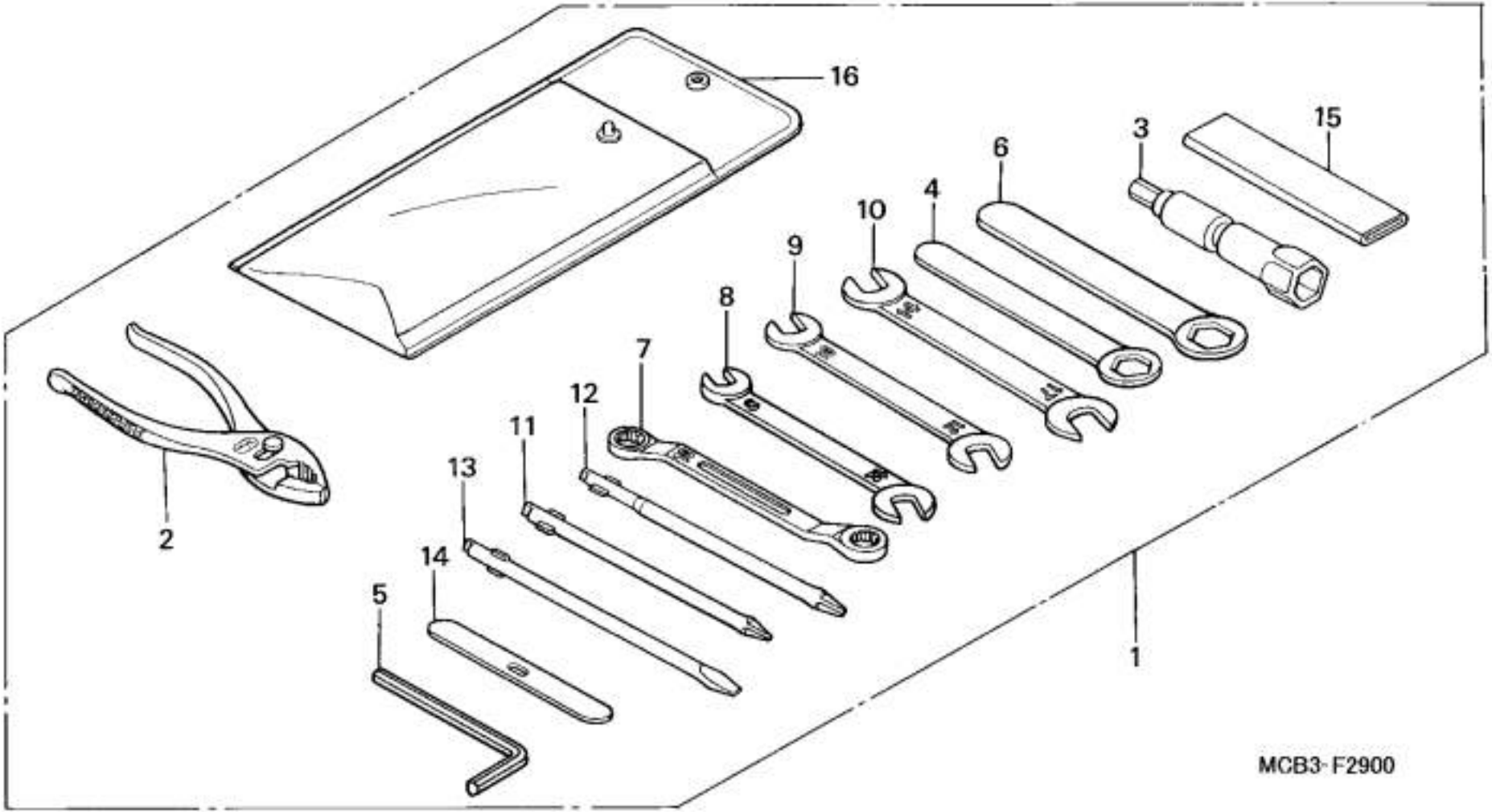
16
15
3
6
4
10
9
8
7
12
11
13
14
5
2
1
MCB3-F2900

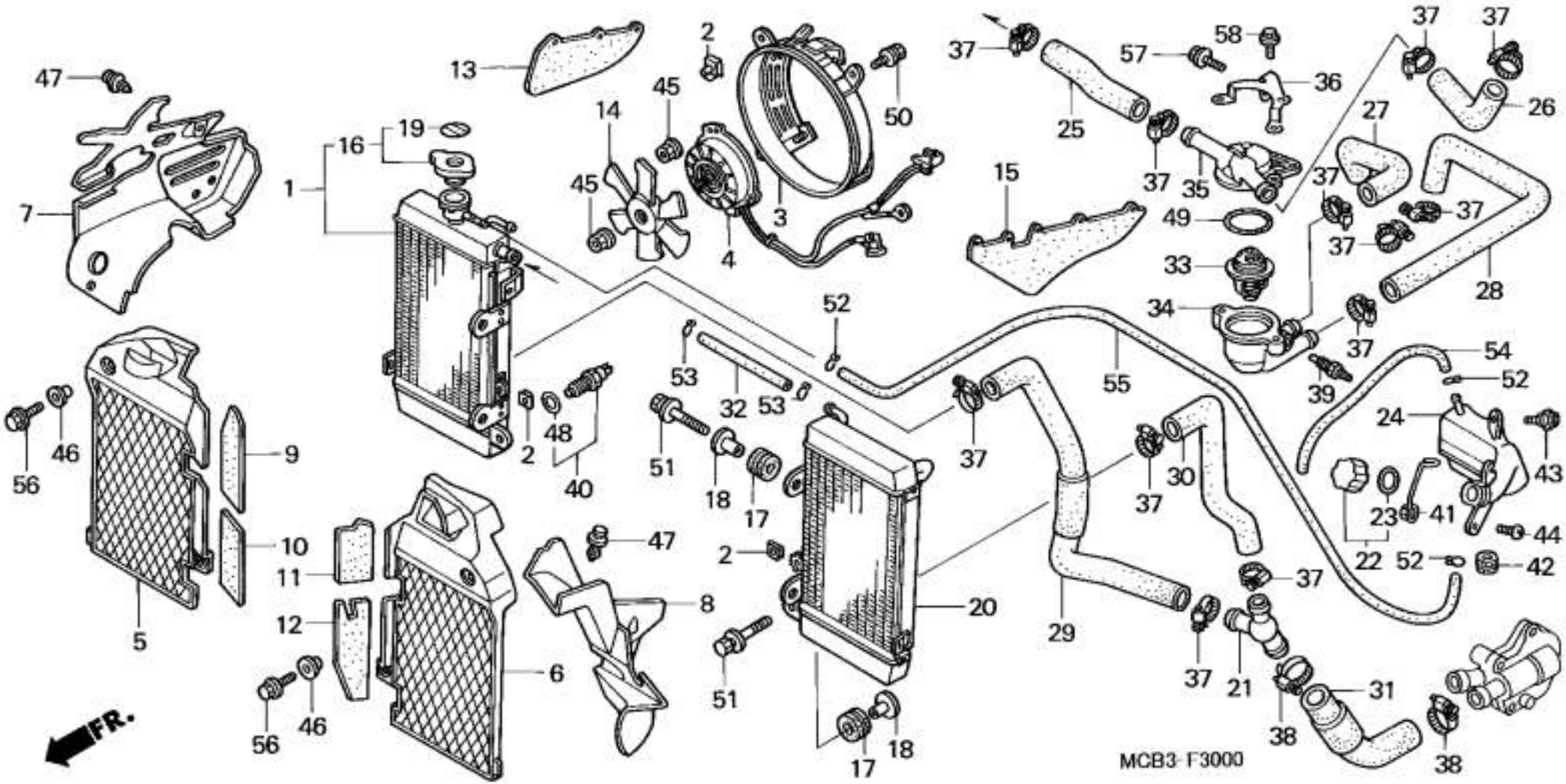
FR.
MCB3-F3000

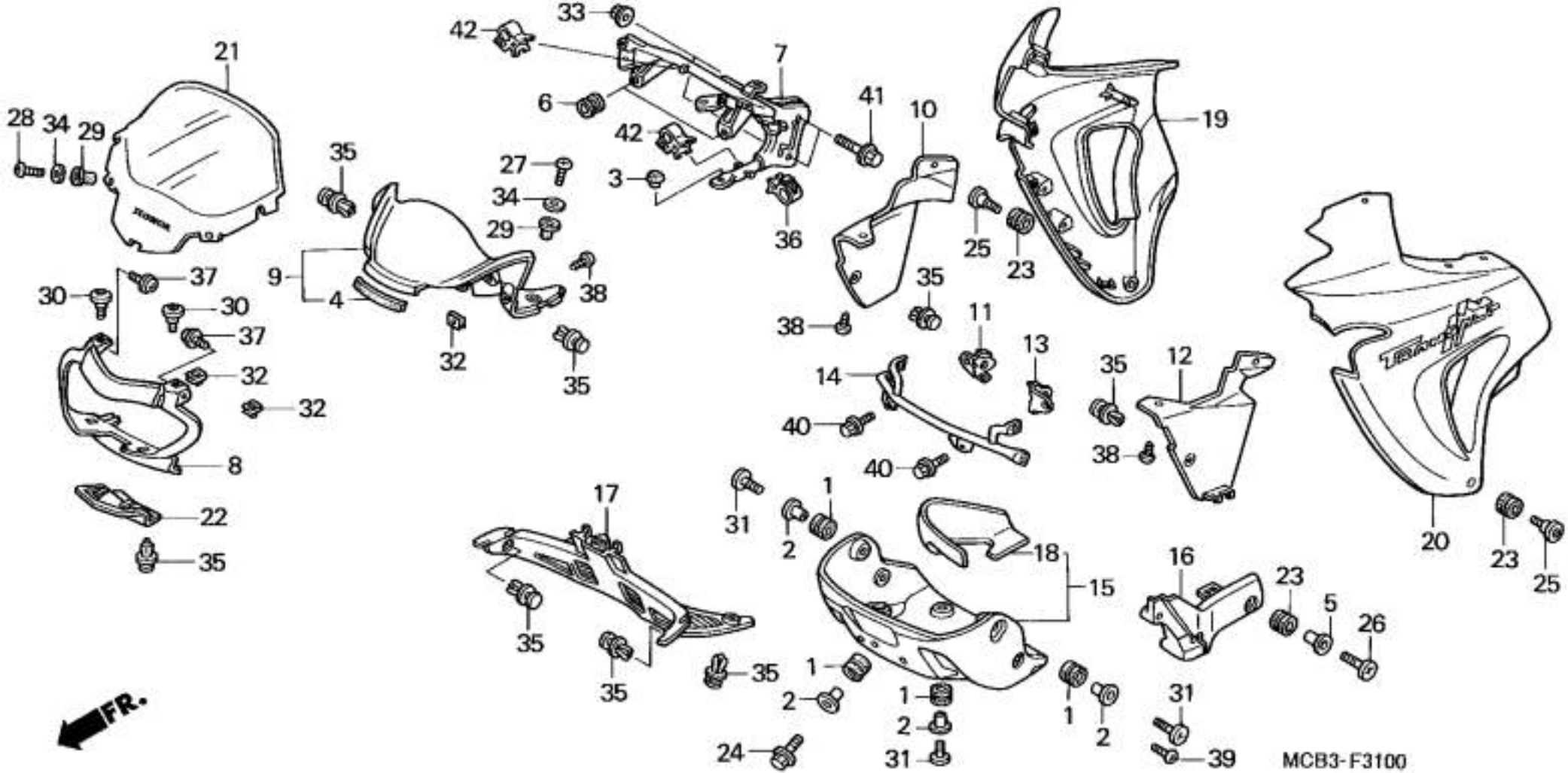
FR.
MCB3-F3100

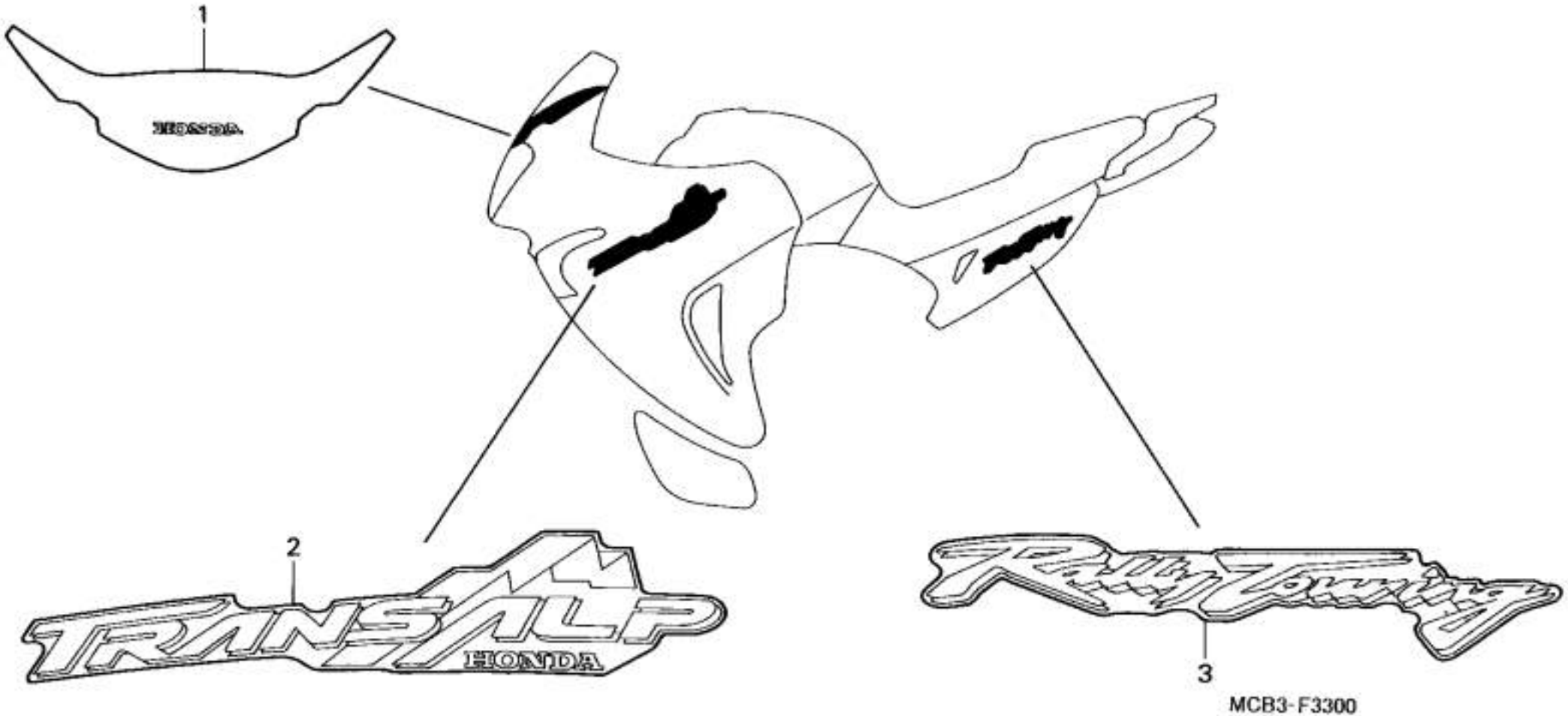

MCB3-F3300

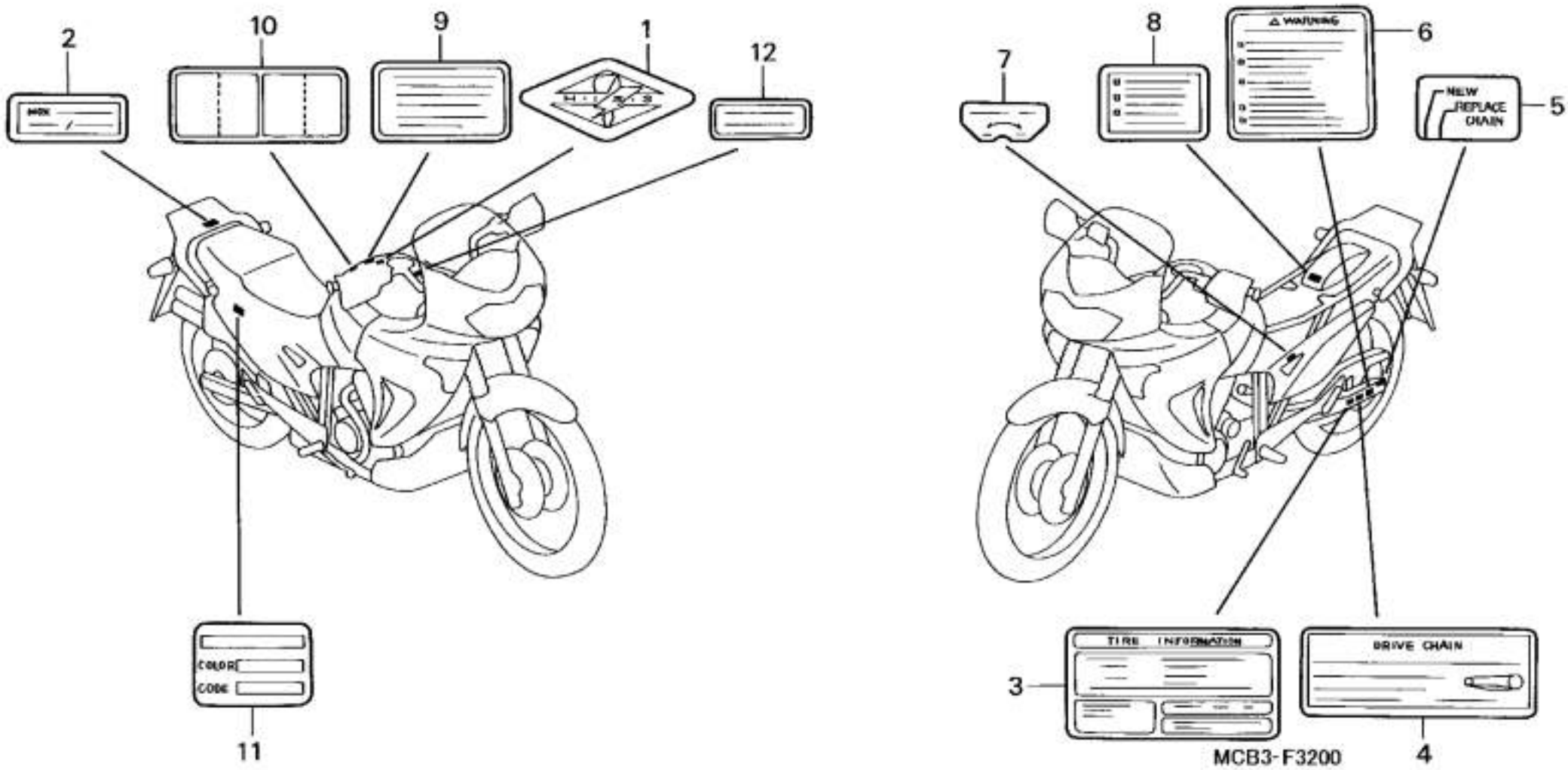
2
10
9
1
12
11
8
7
6
5
3
4
WARNING
NEW
REPLACE
CHAIN
TIRE INFORMATION
DRIVE CHAIN
COLOR
CODE

MCB3-F3200